SUPERMINI & MINI
内孔加工

SUPERMINI AND MINI INTERNAL MACHINING

2023/2024

探索 HORN
EXPLORE HORN

尊敬的HORN用户

卓越的结果总是最佳的加工工艺和完美的工具的结合。为了实现这一目标，HORN结合了先进的技术、性能和可靠性。从单个零件到批量生产，适用于标准或特殊应用:我们的工具为您提供快速，经济，高质量的解决方案。为了帮助您选择切削参数，我们各自目录中的表提供了经过验证的经验值。充分利用我们办公室职员和销售工程师的专业知识。

可持续发展是我们企业理念的核心部分。这就是为什么我们一直关注产品和生产的质量保证、环境保护、能源效率和安全。作为高效可靠的工具合作伙伴，我们确保您与我们一起创造一个创新和强大的经济未来。

Markus Horn
首席执行官
Paul Horn GmbH

Matthias Rommel
首席执行官
Paul Horn GmbH

Explore HORN

Exceptional results are always a combination of the optimum cutting process and the perfect tool. To achieve this, HORN combines advanced technology, performance and reliability. From single part to series production, for standard or special applications: Our tools offer you fast, economical, high quality solutions. To assist you when choosing cutting parameters, our tables in the respective catalogue provide proven empirical values. Take advantage of the expertise of our office staff and sales engineers.

Sustainability is a central part of our corporate philosophy. That is why we have always focused on quality assurance, environmental protection, energy efficiency and safety with regard to our products and our production. As an efficient and reliable tool partner, we make sure that you join us in an innovative and strong economic future.

Markus Horn
CEO
Paul Horn GmbH

Matthias Rommel
CEO
Paul Horn GmbH

摘要 / Index

A 刀具系列 / System 105
镗孔,槽加工,倒角,螺纹,端面槽
Boring, Grooving, Chamfering, Threading, Face Grooving

B 刀具系列 / System 109
镗孔,槽加工,倒角,螺纹,端面槽
Boring, Grooving, Chamfering, Threading, Face Grooving

C 刀具系列 / System 110
镗孔,槽加工,端面槽
Boring, Grooving, Face Grooving

D 刀具系列 / System 106
镗孔,槽加工,倒角
Boring, Grooving, Chamfering

E 刀具系列 / System 107
镗孔,槽加工,倒角,螺纹
Boring, Grooving, Chamfering, Threading

F 刀具系列 / System 108
镗孔,槽加工,倒角,螺纹
Boring, Grooving, Chamfering, Threading

G 刀具系列 / System 10P
镗孔, 槽加工
Boring, Grooving

H 刀具系列 / System 111
镗孔,槽加工,倒角,螺纹n
Boring, Grooving, Chamfering, Threading

I 刀具系列 / System 11P
镗孔, 槽加工
Boring, Grooving

J 刀具系列 / System 114
镗孔,槽加工,倒角,螺纹,端面槽
Boring, Grooving, Chamfering, Threading, Face Grooving

K 刀具系列 / System 116
镗孔,槽加工,倒角,螺纹
Boring, Grooving, Chamfering, Threading

L 刀具系列 / System 18P
镗孔, 槽加工
Boring, Grooving

M 技术说明,加工实例,附加设备
Technical Instructions, Examples for machining, Additional equipment

摘要 / INDEX

A B C D E F G H I J K L M

应用概览
Overview Application

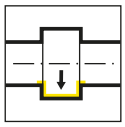

内孔切槽
Internal grooving

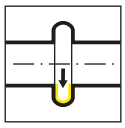

内孔切圆槽
Internal grooving full radius

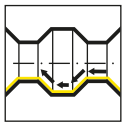

镗内孔及切槽倒角
Internal boring and grooving chamfer

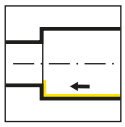

镗内孔
Internal boring

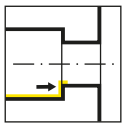

内孔背车
Internal back turning

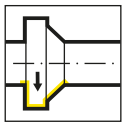

内孔预切槽及倒角
Internal pre-grooving and chamfering

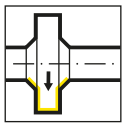

内孔切槽及倒角
Internal grooving with chamfer

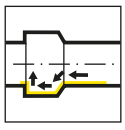

镗孔及仿形
Boring and profiling

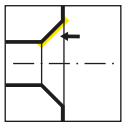

内孔倒角
Internal chamfering

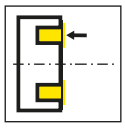

端面槽
Face grooving

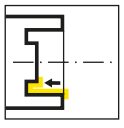

内曲线端面槽
Internal axial grooving in front of center

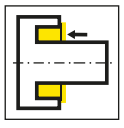

外曲线端面槽
Axial grooving with collar

内冷
Internal coolant

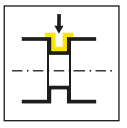

外径切槽
External grooving

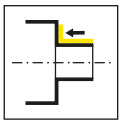

外径横车
External side turning

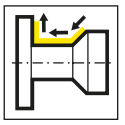

外径仿形车削
External copy turning

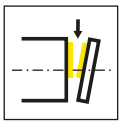

切断
Parting off

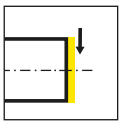

车端面
Face turning

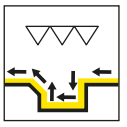

精车
Fine turning

半牙螺纹
Partial profile thread

全牙螺纹
Full profile thread

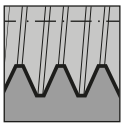

内孔螺纹
Internal thread

BSW
BSF

BSW/BSF 螺纹
Whitworth pipe thread BSW/BSF

NPT
NPTF

NPT 螺纹
National pipe thread

60°

米制ISO螺纹
Metric ISO thread

UN

UN螺纹
Unified thread

应用概览
Overview Application

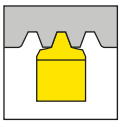

梯形螺纹
Trapezoidal thread

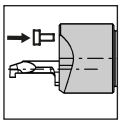

端面夹紧
Face clamping

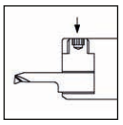

径向夹紧
Lift element

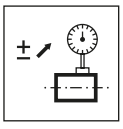

校准
Setup

.D

槽型 D
Geometry D

.FB

槽型 FB
Geometry FB

.H

槽型 H
Geometry H

.HV

槽型 HV
Geometry HV

.I

槽型 I
Geometry I

.R

槽型 R
Geometry R

.GM

槽型 GM - 螺纹
Geometry GM - Threading

槽型及进给 - Supermini
Geometries and feed rates - Supermini

槽型 Geometry	材料 Material	进给 f [mm/U] Feed rate f [mm/rev]	加工方式 Machining
.H	P M K N S H	f = 0.04-0.06 ap = 0.15-0.5 mm	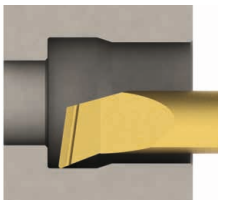
.HV	P M K N S H	f = 0.05-0.1 ap = 0.15-0.5 mm	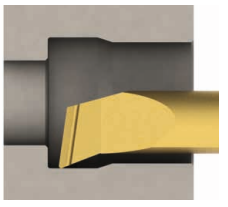
.FB	P M K N S H	f = 0.01-0.04 ap = 0.03-0.05 mm	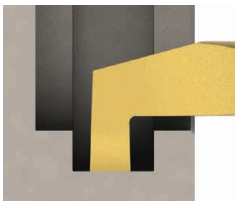
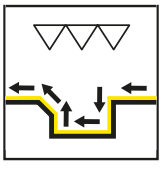	P M K N S H	f = 0.005-0.015 ap = 0.01-0.05 mm	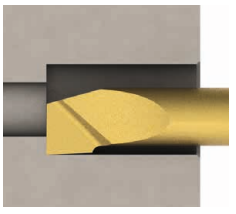

进给 f [mm/U]
Feed rate f [mm/rev]

f = 0.01-0.03

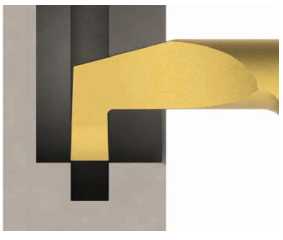

切槽
Grooving

f = 0.02-0.05
ap = 0.15-0.5 mm

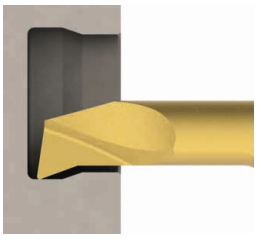

横车
Side Turning

f = 0.02-0.05

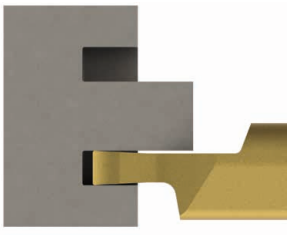

端面槽
Face Grooving

槽型及进给 - Mini
Geometries and feed rates - Mini

槽型 Geometry	材料 Material	进给 f [mm/U] Feed rate f [mm/rev]	加工方式 Machining
.D	P M K N S H	f = 0.03-0.08 ap = 0.2-1.5*	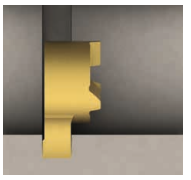
.FB	P M K N S H	f = 0.015-0.05 ap = 0.03-0.07*	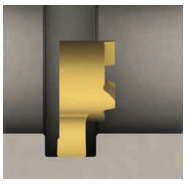
.I	P M K N S H	f = 0.05-0.15 ap = 0.05-0.35	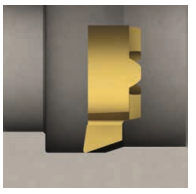
.R	P M K N S H	f = 0.05-0.15 ap = 0.2-1.75*	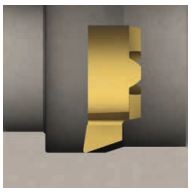

*根据实际工况 / System dependent

进给 f [mm/U]
Feed rate f [mm/rev]

f = 0.01-0.05

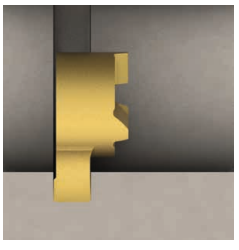

切槽
Grooving

f = 0.03-0.1
ap = 0.1-0.5 mm

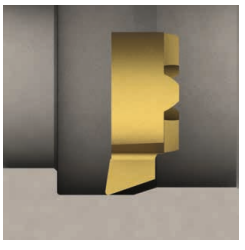

横车
Side Turning

f = 0.01-0.08

端面槽
Face Grooving

- 除非另有说明，所有尺寸均以毫米为单位。
  All dimensions are in mm unless otherwise noted.

- 可根据要求订制更多尺寸和形式.
  Further dimensions and versions are available on request.

- 锁紧螺扭矩规格,请见技术说明。
  For torque specification of the screw, please see "Technical Instructions".

- 所有刀片座损坏的“Mini”系统的刀杆都可以由HORN维修。
  All toolholders of the systems "Mini" with damaged seating can be repaired by HORN.

- 交货期 / Delivery times
  - ▲ 库存 / on stock
  - Δ 4周 / 4 weeks

- 根据被加工材料组 / Use for material groups
  - • 推荐 / recommended
  - o 次推荐 / alternative recommended
  - - 不合适 / not suitable

HORN连接接口代码-需要它做什么?

连接接口代码确保您将始终找到适当的工具，并显示在工具持有人和插入件上。如果代码匹配，则可以在相应的刀架中使用插入件。
这也适用于我们的模块化支架系统，其中连接代码表示刀柄和刀夹之间的接口。

The HORN connection interface code - what is it needed for?

The connection interface code ensures that you will always find the appropriate tools and is shown on toolholders and inserts. If the codes match, the insert can be used in the corresponding toolholder.
This also applies to our modular holder system, where the connection code indicates the interface between the holder and the cassette.

HORN连接接口代码及可能的组合:
HORN connection interface codes and possible combinations:

HIS = 刀片座 / Insert seat
HWS = 工件侧接口 / Interface workpiece side
HMS = 机床侧接口 / Interface machine side

HIS	⟷	**HWS**
HMS	⟷	**HWS**

刀片示例
Example insert

产品型号 Part number	r	f	a	d	l_2	l_5	t_{max}	D_{min}	HIS	TH35
R109.1828.1.6	0.2	2.8	5.7	5	10	28	0.4	6	109140	Δ

刀杆示例
Example toolholder

产品型号 Part number	d	l_1	h	l_4	l_2	d_2	HWS
B109.0012.01	12	75	10	50	16	20	109140

105

刀杆和刀片

Toolholder and Inserts

刀杆
Toolholder
B105/BU105/H105/
HC105/962/963/AIH/
HF.N/VDI/B105C/
B105TS/WFB.105

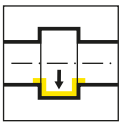

页/Page
15-17, 24-30,
33-40, 64-71, 73,
134-135

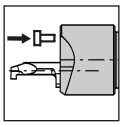

页/Page
19-22

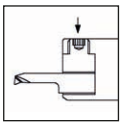

页/Page
23

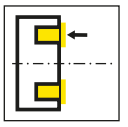

页/Page
139

GRAF常规刀柄 型号
Basic toolholder Graf
IR105/G

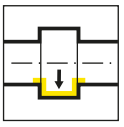

页/Page
31

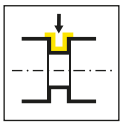

页/Page
51

Graf刀夹
Cartridge Graf
IR105

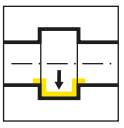

页/Page
32

常规刀柄
Basic toolholder
HC105/L760/BGT

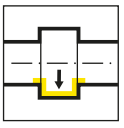

页/Page
41, 44-45, 47-48

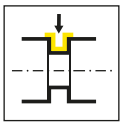

页/Page
42

刀夹
Cassette
KC760

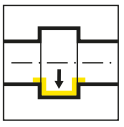

页/Page
43

可调刀杆
Adjustable holder
BKT/N

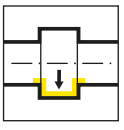

页/Page
46, 49-50, 54-60

GRAF接头
Adaptor Graf
Z

页/Page
52-53

配件
Spare Parts and Additional
Equipment

页/Page
61

技术信息
Technical Instructions

页/Page
62

高度调节装置
Device for height adjusting
HVR.40

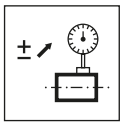

页/Page
63

镗孔杆接纳器
Adaptor for boring bars
001C

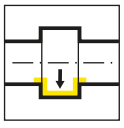

页/Page
72

刀片
Insert
105/A105

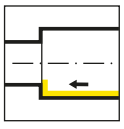

页/Page
74-85, 92-95,
99-100, 133, 136

页/Page
86-87

页/Page
88-91

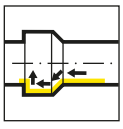

页/Page
96-98

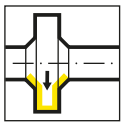

页/Page
101

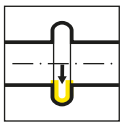

页/Page
102-104

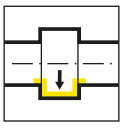

页/Page
105-113

页/Page
114

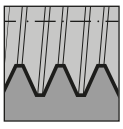

页/Page
115-124

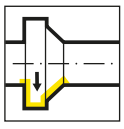

页/Page
125

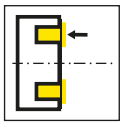

页/Page
126-130, 140-
141

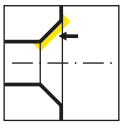

页/Page
131

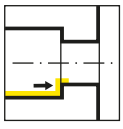

页/Page
132

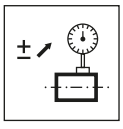

页/Page
137-138

页/Page
142

页/Page
143

HCG - HORN Catalogue Guide

孔径 Bore Ø	产品线 / Product line											
	105	**109**	**110**	**106**	**107**	**108**	**10P**	**111**	**11P**	**114**	**116**	**18P**
⩾ 0.2	•											
⩾ 0.5	•											
⩾ 0.7	•											
⩾ 1.0	•											
⩾ 1.5	•											
⩾ 2.0	•											
⩾ 3.0	•											
⩾ 4.0	•											
⩾ 5.0	•											
⩾ 6.0	•	•	•	•								
⩾ 6.8		•	•	•								
⩾ 7.0		•			•							
⩾ 7.8			•		•	•						
⩾ 8.0			•		•	•						
⩾ 9.0			•		•	•	•					
⩾ 10.0			•				•	•	•			
⩾ 10.5									•			
⩾ 11.0								•	•			
⩾ 11.5									•			
⩾ 13.8										•		
⩾ 14.0										•	•	
⩾ 16.0											•	
⩾ 16.5										(•)		
⩾ 18.0												•
槽深 Depth of groove	2.5	2.5	4.0	0.8	2.0	1.0	3.0	2.3	3.5	4.0 (6.5)	4.3	8.0
槽宽 Width of groove	0.5- 2.0	1.0- 2.0	1.0- 3.0	0.7- 1.5	1.0- 2.0	0.7- 2.0	1.0- 3.0	0.7- 3.0	1.0- 3.0	0.7- 3.0	0.7- 4.0	2.0- 3.0
加工 / Machining												
切槽 Grooving	•	•	•	•	•	•	•	•	•	•	•	•
镗孔 Boring	•	•	•	•	•	•		•		•	•	
螺纹切削 Threading	•	•			•	•		•		•	•	
倒角 Chamfering	•	•			•	•		•		•	•	
端面切槽 Face Grooving	•	•	•							•		
镗孔和仿形加工 Boring and Profiling	•											

B105

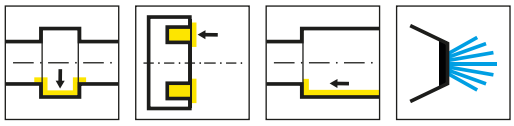

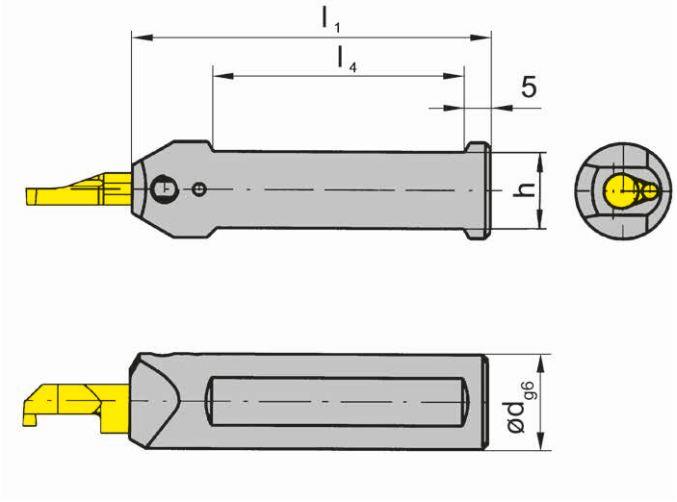

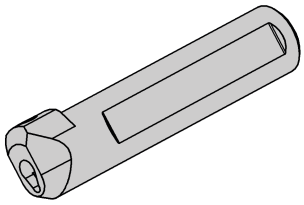

图示=右手型
Picture = right hand cutting version

产品型号 Part number	d	l_1	h	l_4	HWS
B105.0010.01	10	75	9	50	105123 • 105124 • 105125
B105.0012.01	12	75	11	50	105123 • 105124 • 105125
B105.0016.01	16	75	14	50	105123 • 105124 • 105125
B105.0020.01	20	90	18	55	105123 • 105124 • 105125
B105.0022.01	22	90	20	55	105123 • 105124 • 105125
B105.0025.01	25	100	23	55	105123 • 105124 • 105125
B105.0028.01	28	120	26	72	105123 • 105124 • 105125

配件
Spare Parts

刀杆 Toolholder	锁紧螺钉 Clamping Screw	TORX PLUS®扳手 TORX PLUS® Wrench
B105...	**6.075T15P**	**T15PQ**

刀杆
Toolholder

B105

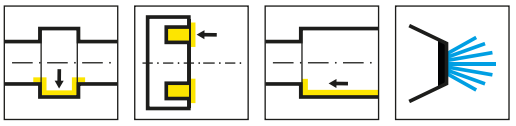

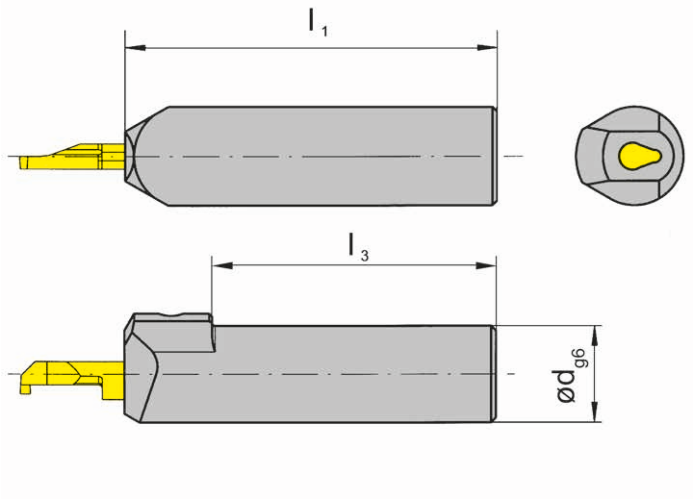

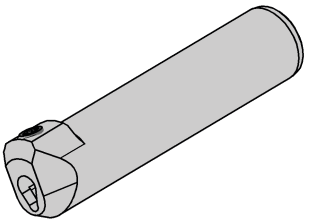

图示=右手型
Picture = right hand cutting version

产品型号 Part number	d	l_1	l_3	HWS
B105.0010.01A	10	75	57	105123 • 105124 • 105125
B105.0012.01A	12	75	63	105123 • 105124 • 105125
B105.0016.01A	16	75	63	105123 • 105124 • 105125

配件
Spare Parts

刀杆 Toolholder	锁紧螺钉 Clamping Screw	TORX PLUS®扳手 TORX PLUS® Wrench
B105...	**6.075T15P**	**T15PQ**

刀杆
Toolholder

BU105

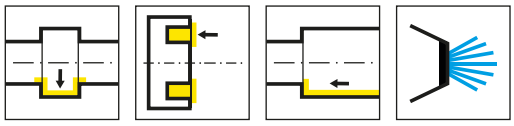

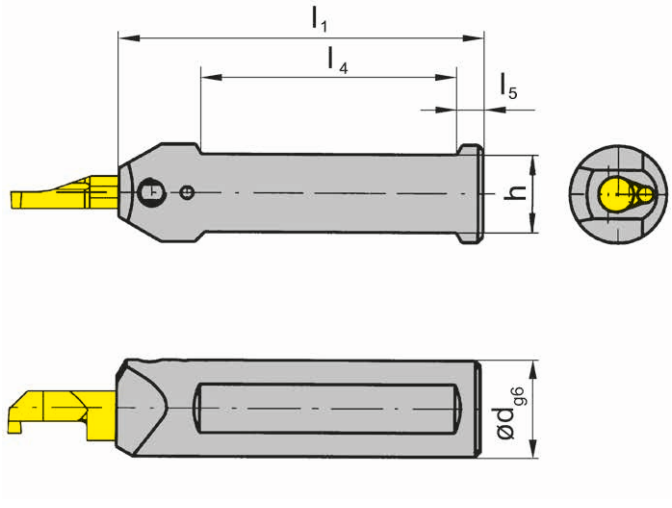

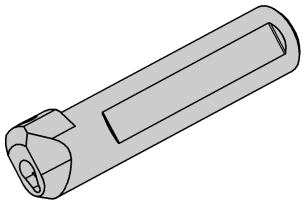

图示=右手型
Picture = right hand cutting version

产品型号 Part number	d	l_1	h	l_4	l_5	HWS
BU105.0750.5.01	3/4“	90	17.04	70	5	105123 • 105124 • 105125
BU105.0750.5.3.01	3/4“	152.5	17.05	70	5	105123 • 105124 • 105125
BU105.1000.5.01	1“	90	23.4	65	5	105123 • 105124 • 105125
BU105.1000.5.3.01	1“	152.5	23.4	70	5	105123 • 105124 • 105125

单位:inch和mm
Dimensions in inch and mm
不包含内冷接口 M12×1.5 用于TRAUB机床 不包含内冷接口.
Adapter of cooling M12x1,5 for Traub machines
Coolant supply is not included.

配件
Spare Parts

刀杆 Toolholder	锁紧螺钉 Clamping Screw	TORX PLUS®扳手 TORX PLUS® Wrench
BU105...	**6.075T15P**	**T15PQ**

尺寸规格 3 (HWS = 105123)
Size 3

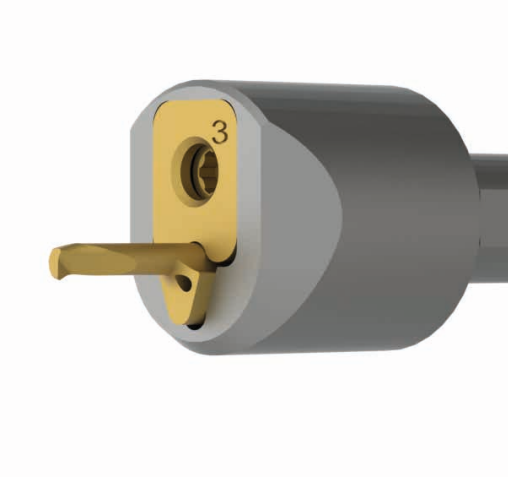

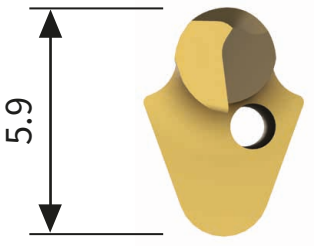

尺寸规格 4 (HWS = 105124)
Size 4

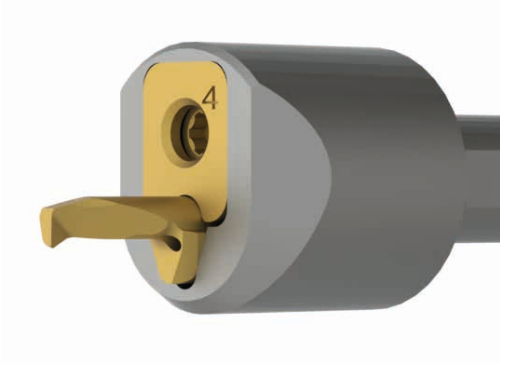

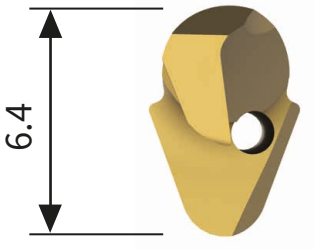

尺寸规格 5 (HWS = 105125)
Size 5

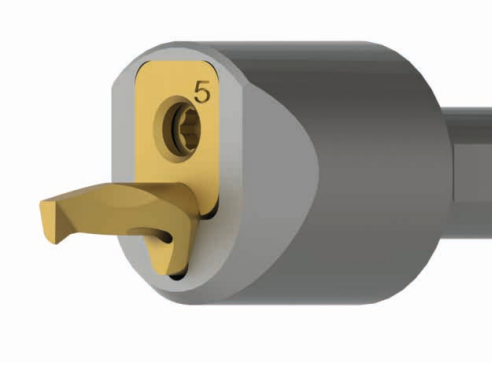

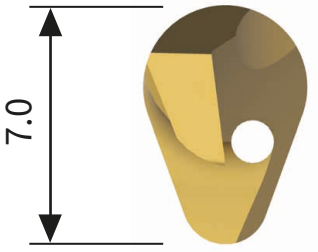

刀杆
Toolholder

B105

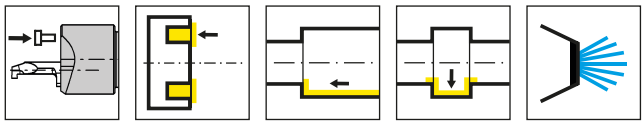

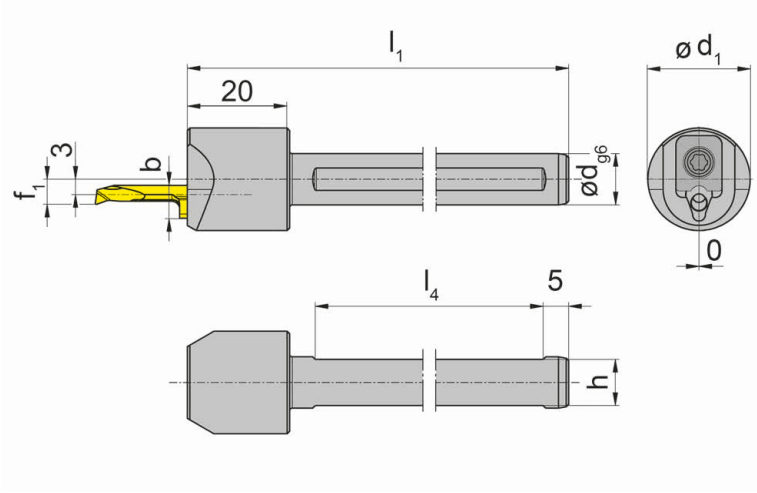

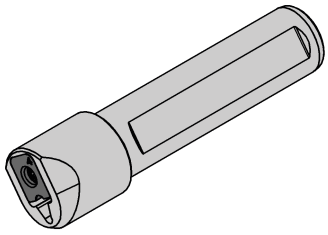

图示=右手型
Picture = right hand cutting version

产品型号 Part number	d	l_1	h	l_4	f_1	d_1	b	HWS
B105.0010.S.03	10	80	9	50	4.3	20	5.9	105123
B105.0012.S.03	12	80	11	50	4.3	20	5.9	105123
B105.0016.S.03	16	80	14	50	4.3	20	5.9	105123
B105.0020.S.03	20	90	18	55	4.3	20	5.9	105123
B105.0022.S.03	22	90	20	55	4.3	22	5.9	105123
B105.0025.S.03	25	100	23	55	4.3	25	5.9	105123
B105.0028.S.03	28	120	26	55	4.3	28	5.9	105123
B105.0010.S.04	10	80	9	50	4.9	20	6.4	105124
B105.0012.S.04	12	80	11	50	4.9	20	6.4	105124
B105.0016.S.04	16	80	14	50	4.9	20	6.4	105124
B105.0020.S.04	20	90	18	55	4.9	20	6.4	105124
B105.0022.S.04	22	90	20	55	4.9	22	6.4	105124
B105.0025.S.04	25	100	23	55	4.9	25	6.4	105124
B105.0028.S.04	28	120	26	55	4.9	28	6.4	105124
B105.0010.S.05	10	80	9	50	6.3	20	7	105125
B105.0012.S.05	12	80	11	50	6.3	20	7	105125
B105.0016.S.05	16	80	14	50	6.3	20	7	105125
B105.0020.S.05	20	90	18	55	6.3	20	7	105125
B105.0022.S.05	22	90	20	55	6.3	22	7	105125
B105.0025.S.05	25	100	23	55	6.3	25	7	105125
B105.0028.S.05	28	120	26	55	6.3	28	7	105125

配件
Spare Parts

刀杆 Toolholder	压板 Clamping element	TORX PLUS®扳手 TORX PLUS® Wrench
B105.0...03	**010.0105.03**	**T15PL**
B105.0...04	**010.0105.04**	**T15PL**
B105.0...05	**010.0105.05**	**T15PL**

刀杆
Toolholder

BU105

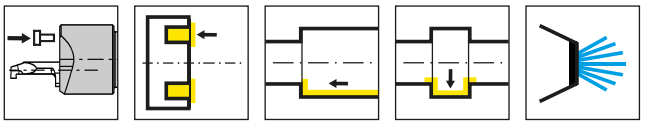

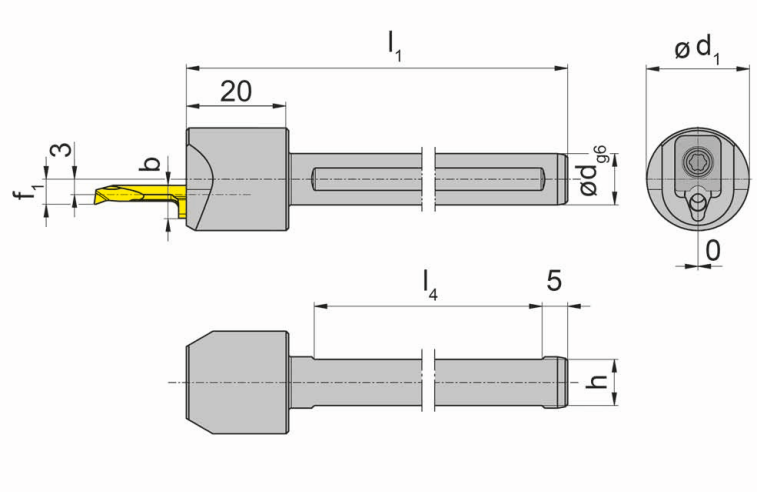

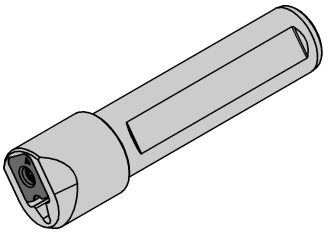

图示=右手型
Picture = right hand cutting version

产品型号 Part number	d	l_1	h	l_4	f_1	d_1	b	HWS
BU105.0500.S.03	1/2“	80	10.7	50	4.3	20	5.9	105123
BU105.0625.S.03	5/8“	80	13.87	50	4.3	20	5.9	105123
BU105.0750.S.03	3/4“	90	17.05	55	4.3	19.05	5.9	105123
BU105.1000.S.03	1“	90	23.4	55	4.3	25.4	5.9	105123
BU105.0500.S.04	1/2“	80	10.7	50	4.9	20	6.4	105124
BU105.0625.S.04	5/8“	80	13.87	50	4.9	20	6.4	105124
BU105.0750.S.04	3/4“	90	17.05	55	4.9	19.05	6.4	105124
BU105.1000.S.04	1“	90	23.4	55	4.9	25.4	6.4	105124
BU105.0500.S.05	1/2“	80	10.7	50	6.3	20	7	105125
BU105.0625.S.05	5/8“	80	13.87	50	6.3	20	7	105125
BU105.0750.S.05	3/4“	90	17.05	55	6.3	19.05	7	105125
BU105.1000.S.05	1“	90	23.4	55	6.3	25.4	7	105125

单位:inch和mm
Dimensions in inch and mm

配件
Spare Parts

刀杆 Toolholder	压板 Clamping element	TORX PLUS®扳手 TORX PLUS® Wrench
BU105.0...03	**010.0105.03**	**T15PL**
BU105.0...04	**010.0105.04**	**T15PL**
BU105.0...05	**010.0105.05**	**T15PL**

刀杆
Toolholder

B105

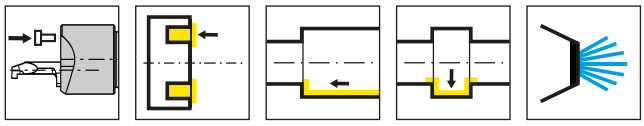

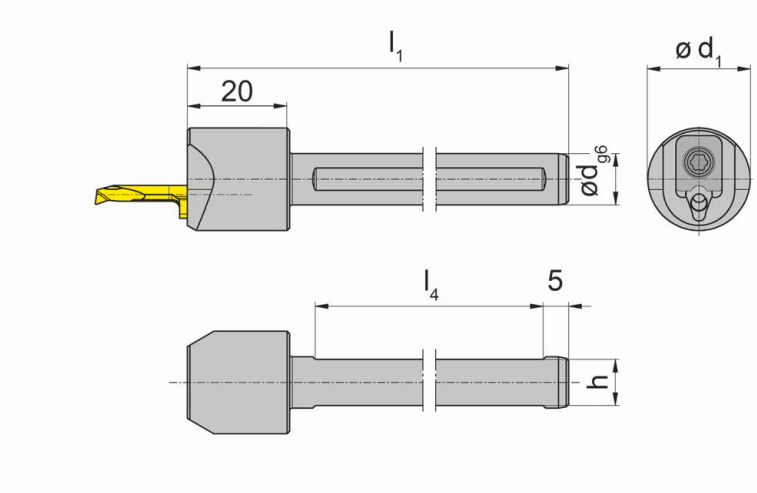

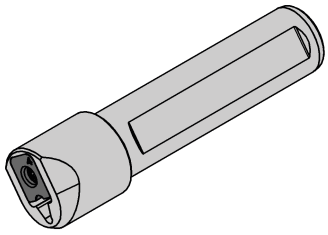

产品型号 Part number	d	h	l_1	l_4	d_1	HWS
B105.0010.S.SET	10	9	80	50	20	105123 • 105124 • 105125
B105.0012.S.SET	12	11	80	50	20	105123 • 105124 • 105125
B105.0016.S.SET	16	14	80	50	20	105123 • 105124 • 105125
B105.0020.S.SET	20	18	90	55	20	105123 • 105124 • 105125
B105.0022.S.SET	22	20	90	55	22	105123 • 105124 • 105125
B105.0025.S.SET	25	23	100	55	25	105123 • 105124 • 105125
B105.0028.S.SET	28	26	120	55	28	105123 • 105124 • 105125

注意事项：
刀杆套装包含三种不同夹紧元件

Note:
One toolholder set includes 3 clamping elements each

配件
Spare Parts

刀杆 Toolholder	压板 Clamping element	TORX PLUS®扳手 TORX PLUS® Wrench
B105...	**010.0105.03** **010.0105.04** **010.0105.05**	**T15PW**

刀杆
Toolholder

BU105

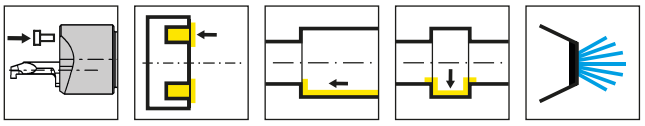

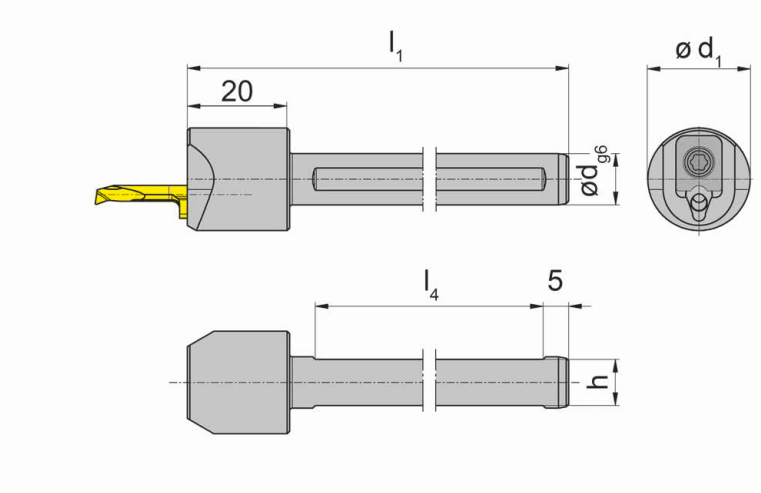

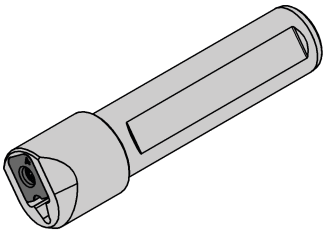

产品型号 Part number	d	h	l_1	l_4	d_1	HWS
BU105.0500.S.SET	.500“	10.7	80	50	20	105123 • 105124 • 105125
BU105.0625.S.SET	.625“	13.875	80	50	20	105123 • 105124 • 105125
BU105.0750.S.SET	.750“	17.05	90	55	19.05	105123 • 105124 • 105125
BU105.1000.S.SET	1“	23.4	90	55	25.4	105123 • 105124 • 105125

单位:inch和mm
Dimensions in inch and mm

注意事项:
刀杆套装包含三种不同夹紧元件

Note:
One toolholder set includes 3 clamping elements each

配件
Spare Parts

刀杆 Toolholder	压板 Clamping element	TORX PLUS®扳手 TORX PLUS® Wrench
BU105...	**010.0105.03** **010.0105.04** **010.0105.05**	**T15PW**

刀杆
Toolholder

B105

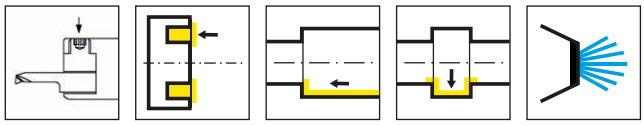

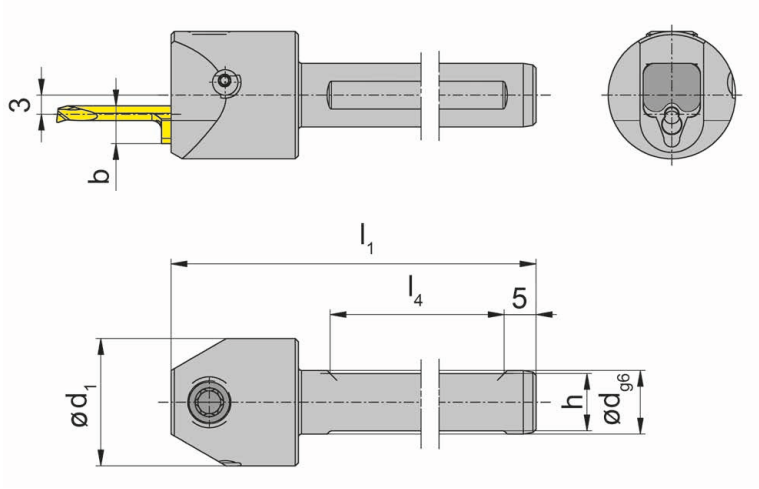

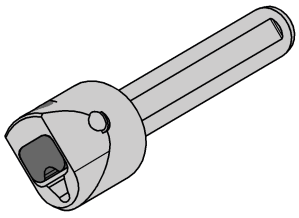

产品型号 Part number	d	l_1	h	l_4	d_1	b	HWS
B105.0010.A.03	10	80	9	50	20	5.9	105123
B105.0012.A.03	12	80	11	50	20	5.9	105123
B105.0016.A.03	16	80	14	50	20	5.9	105123
B105.0020.A.03	20	90	18	55	20	5.9	105123
B105.0025.A.03	25	100	23	55	25	5.9	105123
B105.0010.A.04	10	80	9	50	20	6.4	105124
B105.0012.A.04	12	80	11	50	20	6.4	105124
B105.0016.A.04	16	80	14	50	20	6.4	105124
B105.0020.A.04	20	90	18	55	20	6.4	105124
B105.0025.A.04	25	100	23	55	25	6.4	105124
B105.0010.A.05	10	80	9	50	20	7	105125
B105.0012.A.05	12	80	11	50	20	7	105125
B105.0016.A.05	16	80	14	50	20	7	105125
B105.0020.A.05	20	90	18	55	20	7	105125
B105.0025.A.05	25	100	23	55	25	7	105125

b = 刀片高度
b = Heigth of insert

配件
Spare Parts

刀杆 Toolholder	压板 Clamping element	TORX PLUS®扳手 TORX PLUS® Wrench
B105.0...03	**010.0003.0668**	**T25PQ**
B105.0...04	**010.0004.0667**	**T25PQ**
B105.0...05	**010.0005.0663**	**T25PQ**

刀杆
Toolholder

B105

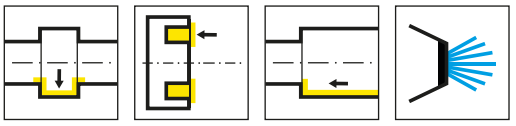

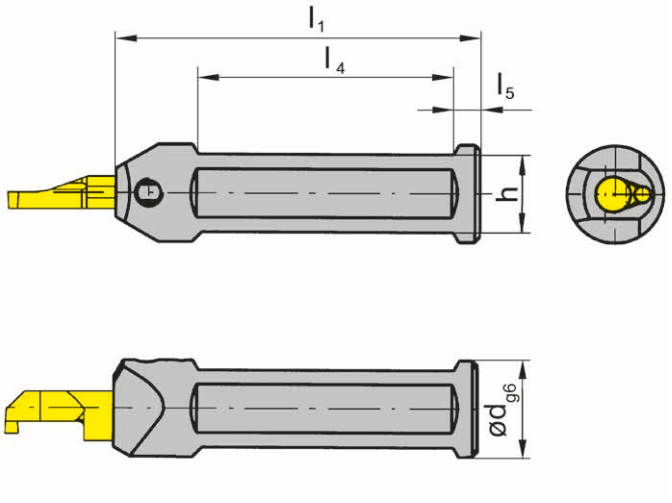

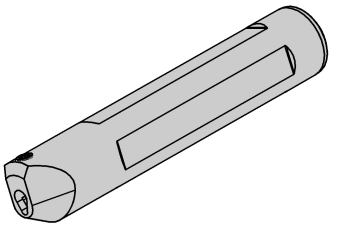

图示=右手型
Picture = right hand cutting version

产品型号 Part number	d	l_1	h	l_4	l_5	HWS
B105.0022.1.2.01	22	120	20	72	5	105123 • 105124 • 105125

配件
Spare Parts

刀杆 Toolholder	**锁紧螺钉** Clamping Screw	**TORX PLUS®扳手** TORX PLUS® Wrench
B105.0022.1.2.01	**6.075T15P**	**T15PQ**

刀杆
Toolholder

B105

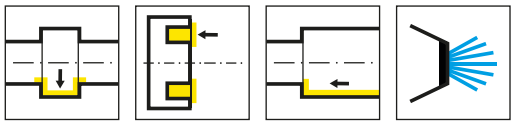

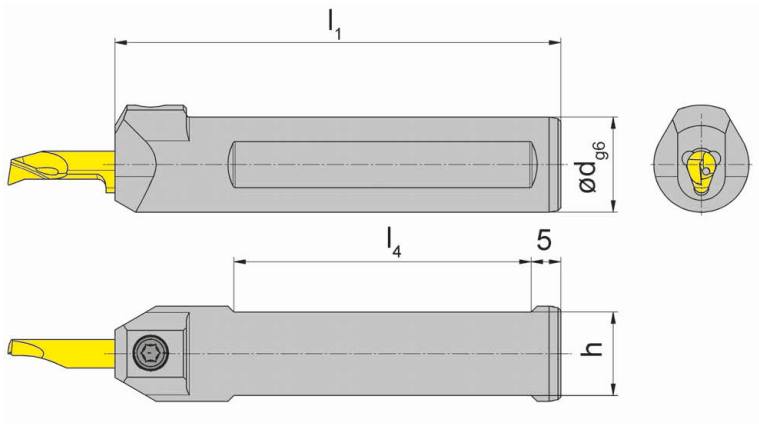

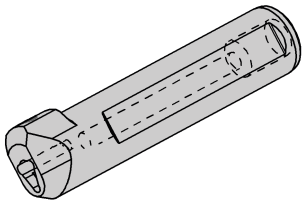

图示=右手型
Picture = right hand cutting version

产品型号 Part number	d	l_1	h	l_4	HWS
B105.0012.K.01	12	75	11	50	105123 • 105124 • 105125
B105.0016.K.01	16	75	14	50	105123 • 105124 • 105125
B105.0020.K.01	20	90	18	50	105123 • 105124 • 105125
B105.0022.K.01	22	90	20	55	105123 • 105124 • 105125
B105.0025.K.01	25	100	23	55	105123 • 105124 • 105125
B105.0012.M8.K.01	12	75	11	50	105123 • 105124 • 105125
B105.0016.M8.K.01	16	75	14	50	105123 • 105124 • 105125
B105.0020.M8.K.01	20	90	18	55	105123 • 105124 • 105125

带有多个冷却孔
with additional through coolant bores

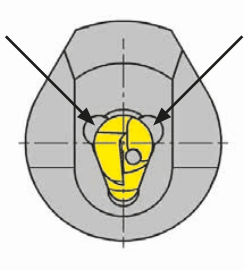

配件
Spare Parts

刀杆 Toolholder	锁紧螺钉 Clamping Screw	TORX PLUS®扳手 TORX PLUS® Wrench
B105...	**6.075T15P**	**T15PQ**

刀杆
Toolholder

B105

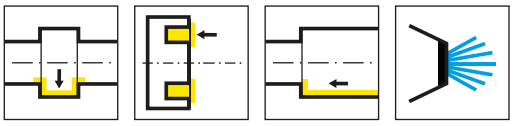

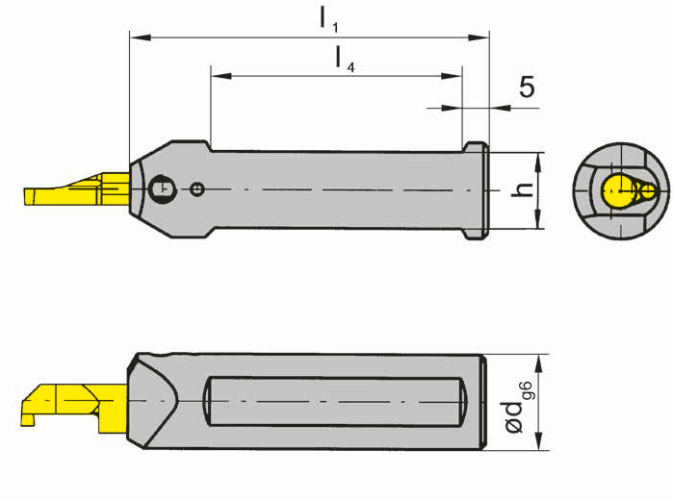

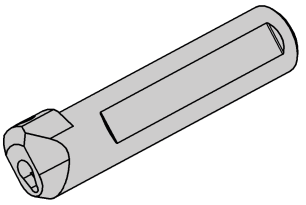

图示=右手型
Picture = right hand cutting version

产品型号 Part number	d	l_1	h	l_4	HWS
B105.0012.M8.01	12	75	11	50	105123 • 105124 • 105125
B105.0016.M8.01	16	75	14	50	105123 • 105124 • 105125
B105.0020.M8.01	20	90	18	55	105123 • 105124 • 105125
B105.0025.M8.01	25	100	23	55	105123 • 105124 • 105125

配件
Spare Parts

刀杆 Toolholder	锁紧螺钉 Clamping Screw	TORX PLUS®扳手 TORX PLUS® Wrench
B105...	**6.075T15P**	**T15PQ**

刀杆
Toolholder

B105

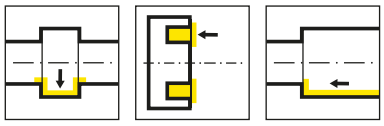

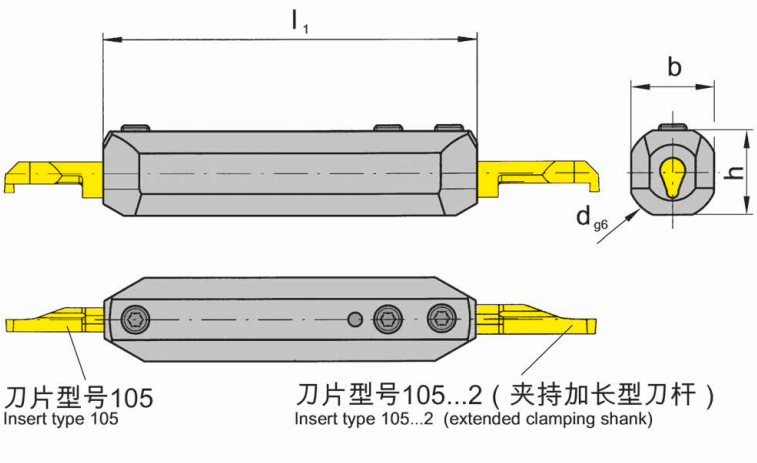

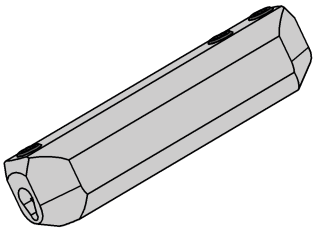

图示=右手型
Picture = right hand cutting version

产品型号 Part number	d	l_1	h	b	HWS
B105.0020.1.03	20	80	18	18	105123 • 105124 • 105125 • 105225

配件
Spare Parts

刀杆 Toolholder	**锁紧螺钉** Clamping Screw	**TORX PLUS®扳手** TORX PLUS® Wrench
B105.0020.1.03	**6.075T15P**	**T15PQ**

刀杆
Toolholder

B105

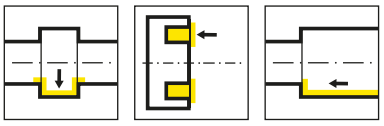

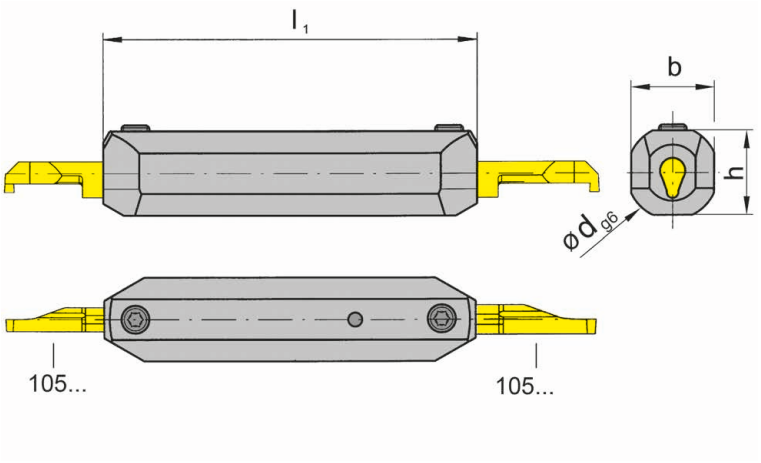

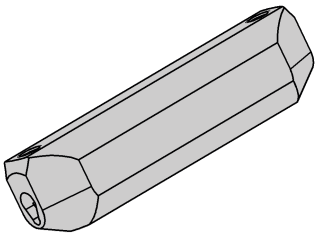

图示=右手型
Picture = right hand cutting version

产品型号 Part number	d	l_1	h	b	HWS
B105.0022.2.1.01	22	80	20	20	105123 • 105124 • 105125
B105.0022.2.2.01	22	120	20	20	105123 • 105124 • 105125

配件
Spare Parts

刀杆 Toolholder	**锁紧螺钉** Clamping Screw	**TORX PLUS®扳手** TORX PLUS® Wrench
B105...	**6.075T15P**	**T15PQ**

刀杆
Toolholder

B105

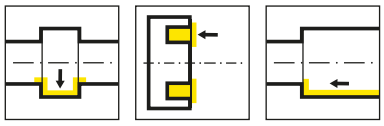

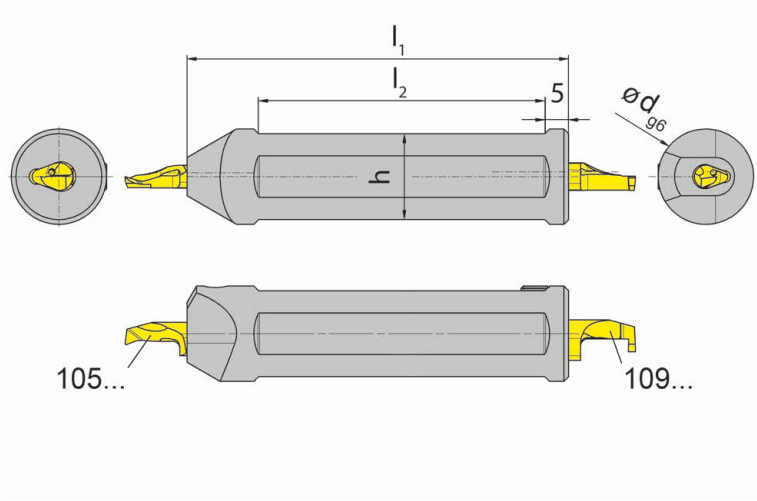

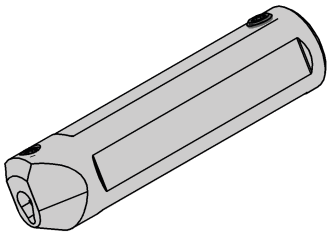

图示=右手型
Picture = right hand cutting version

产品型号 Part number	d	l_1	h	l_2	HWS
B105.0020.1.09	20	80	18	60	105123 • 105124 • 105125 • 109140

配件
Spare Parts

刀杆 Toolholder	**锁紧螺钉** Clamping Screw	**TORX PLUS®扳手** TORX PLUS® Wrench
B105.0020.1.09	**6.075T15P**	**T15PQ**

刀杆
Toolholder

B105

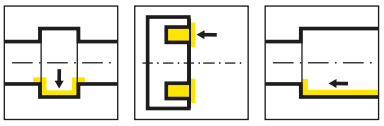

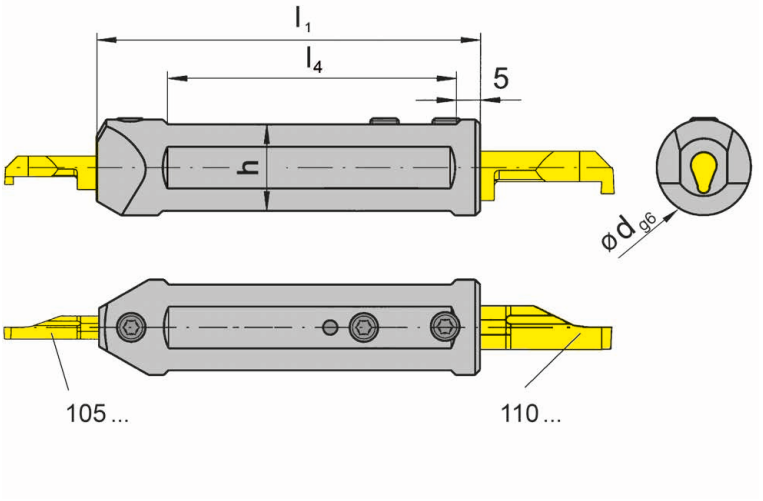

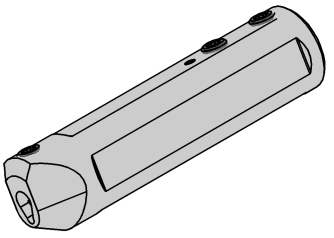

图示=右手型
Picture = right hand cutting version

产品型号 Part number	d	l_1	h	l_4	HWS
B105.0020.1.10	20	80	18	60	105123 • 105124 • 105125 • 110260

配件
Spare Parts

刀杆 Toolholder	**锁紧螺钉** Clamping Screw	**TORX PLUS®扳手** TORX PLUS® Wrench
B105.0020.1.10	**6.075T15P**	**T15PQ**

GRAF常规刀柄 型号
Basic toolholder Graf

IR105

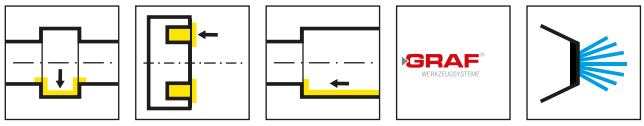

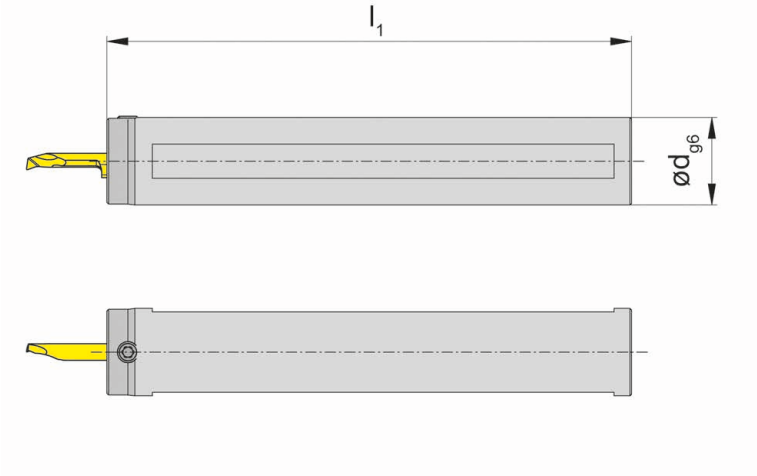

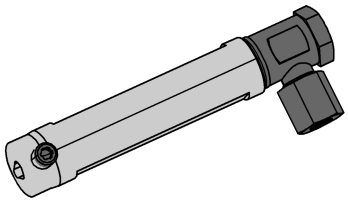

图示=右手型
Picture = right hand cutting version

产品型号 Part number	d	l_1	机床型号 Machine type	HWS
IR.105.34.100.IK	3/4“	100	Citizen	105123 • 105124 • 105125
IR.105.34.40.IK	3/4“	40	Citizen	105123 • 105124 • 105125
IR.105.34.50.IK	3/4“	50	Citizen	105123 • 105124 • 105125
IR.105.34.70.IK	3/4“	70	Citizen	105123 • 105124 • 105125
IR.105.10.100.IK	1“	100	Citizen	105123 • 105124 • 105125
IR.105.10.60.IK	1“	60	Citizen	105123 • 105124 • 105125
IR.105.20.30.IK	20	30	Citizen	105123 • 105124 • 105125
IR.105.20.50.IK	20	50	Citizen	105123 • 105124 • 105125
IR.105.16.100.IK	16	100	Star	105123 • 105124 • 105125
IR.105.16.30.IK	16	30	Star	105123 • 105124 • 105125
IR.105.16.50.IK	16	50	Star	105123 • 105124 • 105125
IR.105.16.70.IK	16	70	Star	105123 • 105124 • 105125
IR.105.20.100.IK	20	100	Star	105123 • 105124 • 105125
IR.105.22.100.IK	22	100	Star	105123 • 105124 • 105125
IR.105.22.120.3.IK	22	120	Star	105123 • 105124 • 105125
IR.105.22.120.IK	22	120	Star	105123 • 105124 • 105125
IR.105.22.150.IK	22	150	Star	105123 • 105124 • 105125
IR.105.22.38.IK	22	38	Star	105123 • 105124 • 105125
IR.105.22.50.IK	22	50	Star	105123 • 105124 • 105125
IR.105.22.70.IK	22	70	Star	105123 • 105124 • 105125
IR.105.20.170.IK	20	170	Tornos	105123 • 105124 • 105125
IR.105.20.185.IK	20	185	Tornos	105123 • 105124 • 105125
IR.105.25.100.IK	25	100	Tornos	105123 • 105124 • 105125
IR.105.25.150.IK	25	150	Tornos	105123 • 105124 • 105125
IR.105.28.80.IK	28	80	Tornos	105123 • 105124 • 105125

单位:inch和mm
Dimensions in inch and mm

Graf刀夹
Cartridge Graf

IR105

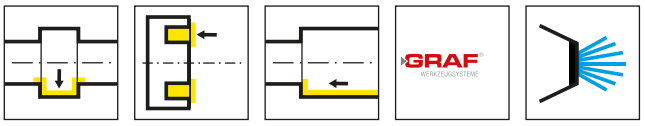

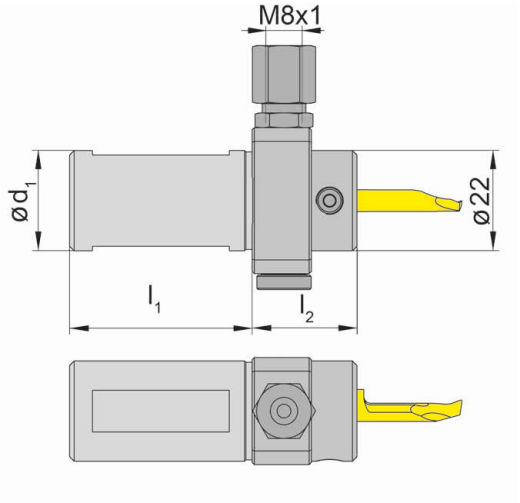

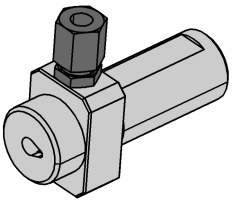

图示=右手型
Picture = right hand cutting version

产品型号 Part number	d_1	l_1	l_2	HWS
IR.105.1640.IKV	16	40	25	105123 • 105124 • 105125
IR.105.3440.IKV	3/4“	40	25	105123 • 105124 • 105125
IR.105.2040.IKV	20	40	25	105123 • 105124 • 105125
IR.105.2240.IKV	22	40	25	105123 • 105124 • 105125
IR.105.2560.IKV	25	60	25	105123 • 105124 • 105125
IR.105.1060.IKV	1“	60	25	105123 • 105124 • 105125

单位:inch和mm
Dimensions in inch and mm

配件
Spare Parts

Graf刀夹 Cartridge Graf	锁紧螺钉 Clamping Screw	冷却液供应 Coolant supply	TORX PLUS®扳手 TORX PLUS® Wrench
IR...	**6.075T15P**	**004.00.19**	**T15PQ**

刀杆
Toolholder

B105

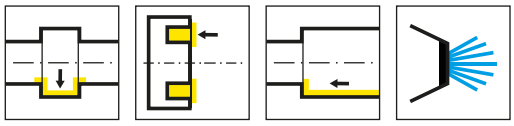

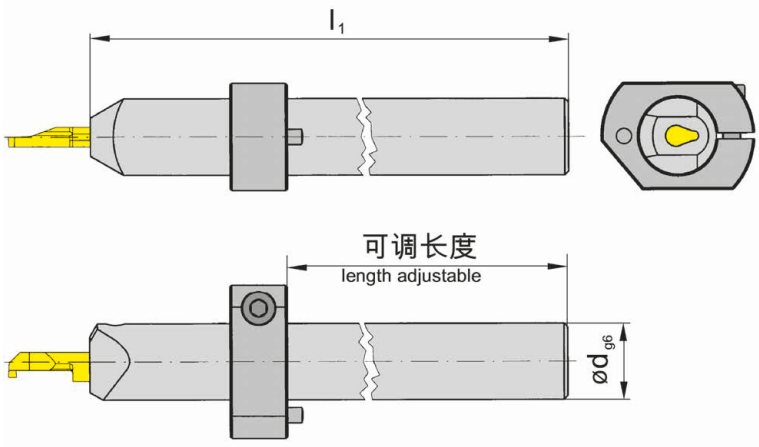

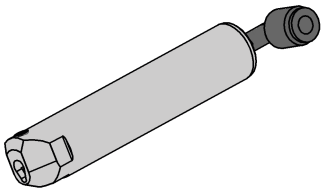

图示=右手型
Picture = right hand cutting version

产品型号 Part number	d	l_1	HWS
B105.0020.2.01	20	150	105123 • 105124 • 105125
B105.0025.2.01	25	150	105123 • 105124 • 105125

调整环不包含在刀杆内-需要单独订购！
Adjusting ring is not combined with the toolholder - separate order required!

调整环 Adjusting ring	d	机床型号 Machine typ
020.0020.1665	20	Tornos
020.0025.2234	25	Tornos

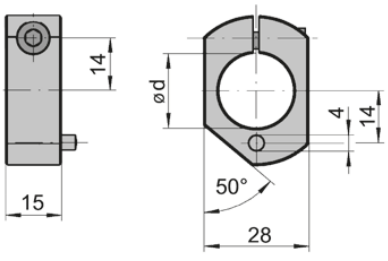

配件
Spare Parts

刀杆 Toolholder	锁紧螺钉 Clamping Screw	TORX PLUS®扳手 TORX PLUS® Wrench
B105...	**6.075T15P**	**T15PQ**

刀杆
Toolholder

B105

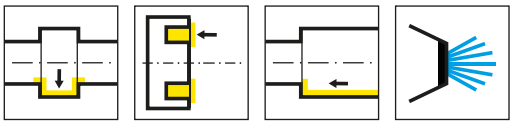

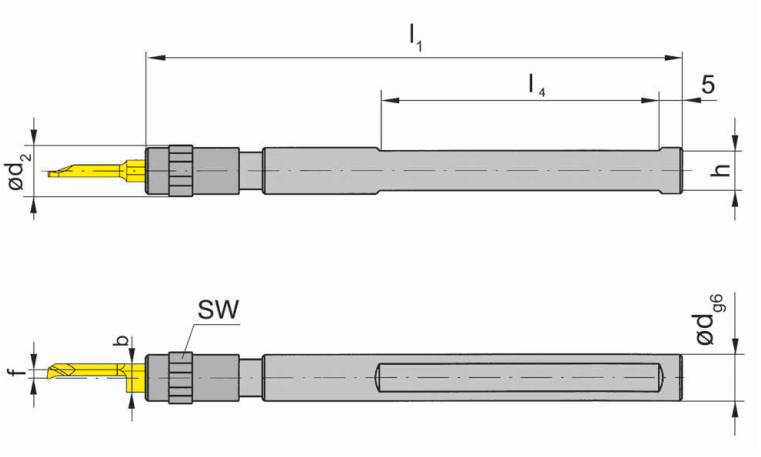

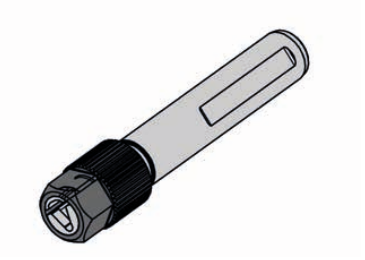

图示=右手型
Picture = right hand cutting version

产品型号 Part number	d	l_1	h	l_4	f	d_2	SW	b	HWS
B105.0010.9.01	10	100	9	50	1.6	11	10	5.9	105123
B105.0012.11.01	12	100	11	50	1.2	16	13	7	105125
B105.0016.11.01	16	100	15	50	1.2	16	13	7	105125

b = 刀片高度
b = Heigth of insert

扭矩 = 2 Nm
Tightening torque = 2 Nm

配件
Spare Parts

刀杆 Toolholder	锁紧螺母 Clamping nut
B105.0010.9.01	**020.0010.1719**
B105.00...	**020.0016.1999**

H105

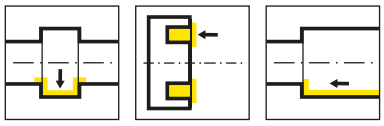

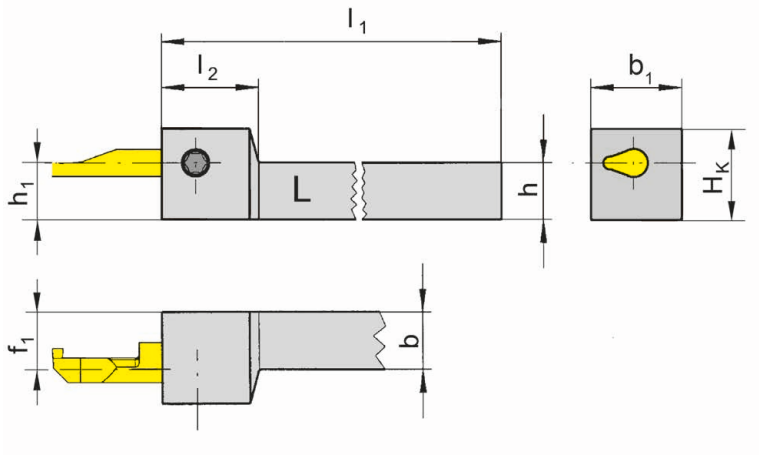

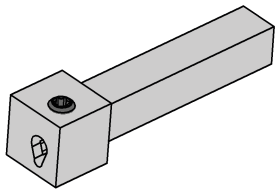

L=左手型-如图
L = left hand version shown

R=右手型
R = right hand version

产品型号 Part number	h	b	l_1	h_1	b_1	f_1	H_K	l_2	HWS
RH105.0808.01	8	8	90	8	16	7.5	14	17	105123 • 105124 • 105125
RH105.1010.01	10	10	90	10	16	7.5	16	17	105123 • 105124 • 105125
RH105.1212.01	12	12	90	12	16	7.5	18	17	105123 • 105124 • 105125
RH105.1616.01	16	16	110	16	16	7.5	22	17	105123 • 105124 • 105125
LH105.0808.01	8	8	90	8	16	7.5	14	17	105123 • 105124 • 105125
LH105.1010.01	10	10	90	10	16	7.5	16	17	105123 • 105124 • 105125
LH105.1212.01	12	12	90	12	16	7.5	18	17	105123 • 105124 • 105125
LH105.1616.01	16	16	110	16	16	7.5	22	17	105123 • 105124 • 105125

配件
Spare Parts

刀杆 Toolholder	锁紧螺钉 Clamping Screw	TORX PLUS®扳手 TORX PLUS® Wrench
R/LH105...	**6.075T15P**	**T15PQ**

刀杆
Toolholder

HC105

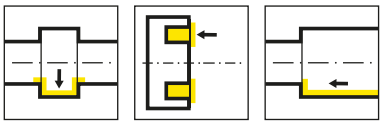

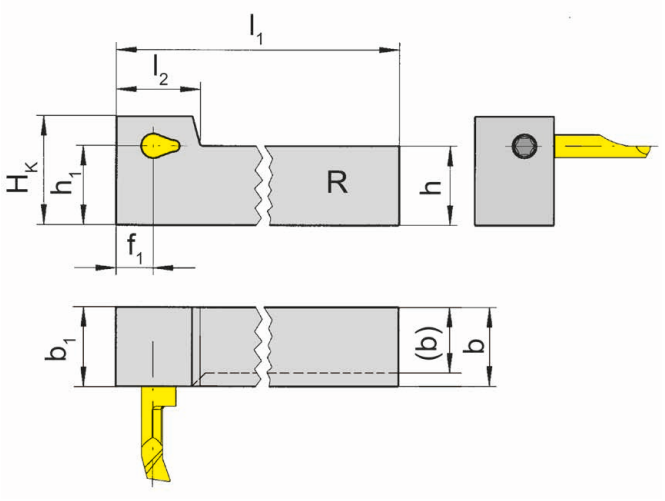

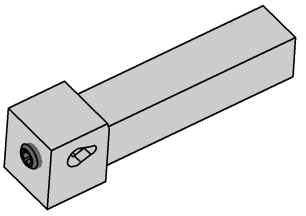

R=右手型-如图
R = right hand version shown

L=左手型
L = left hand version

产品型号 Part number	h	b	l_1	l_2	h_1	b_1	f_1	H_K	HWS
RHC105.1212.01	12	12	90	17	12	16	7.5	18	105123 • 105124 • 105125
RHC105.1616.01	16	16	130	17	16	16	7.5	22	105123 • 105124 • 105125
LHC105.1212.01	12	12	90	17	12	16	7.5	18	105123 • 105124 • 105125
LHC105.1616.01	16	16	130	17	16	16	7.5	22	105123 • 105124 • 105125

配件
Spare Parts

刀杆 Toolholder	锁紧螺钉 Clamping Screw	TORX PLUS®扳手 TORX PLUS® Wrench
R/LHC105...	**6.075T15P**	**T15PQ**

HC105

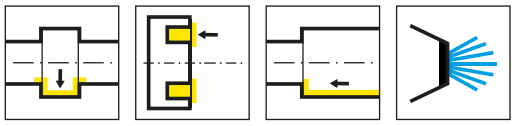

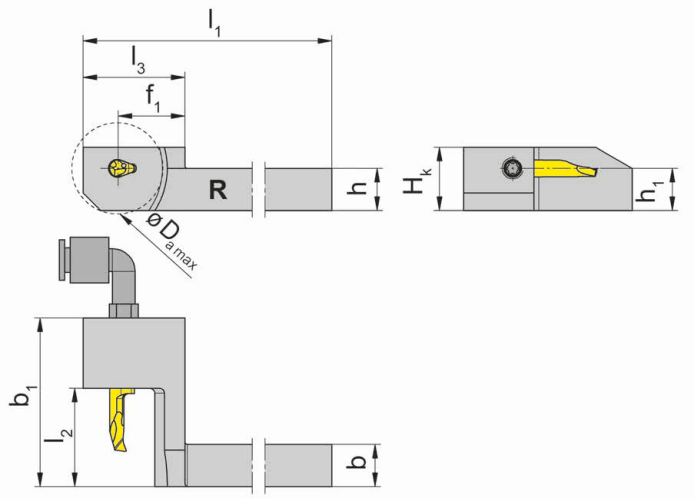

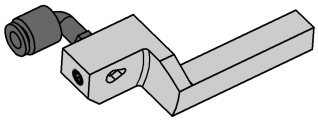

R=右手型-如图
R = right hand version shown

L=左手型
L = left hand version

产品型号 Part number	h	b	l_1	l_3	h_1	b_1	f_1	$D_{a\,max}$	H_K	l_2	HWS
RHC105.0808.21	8	8	99	29	8	32	19	26	13	18	105123 • 105124 • 105125
RHC105.1010.11	10	10	99	29	10	22.7	19	26	16	8	105123 • 105124 • 105125
RHC105.1010.21	10	10	99	29	10	38	19	26	16	18	105123 • 105124 • 105125
RHC105.1010.41	10	10	99	29	10	48	19	26	16	28	105123 • 105124 • 105125
RHC105.1212.21	12	12	99	29	12	38	19	26	18	18	105123 • 105124 • 105125
RHC105.1212.41	12	12	99	29	12	48	19	26	18	28	105123 • 105124 • 105125
RHC105.1616.21	16	16	104	34	16	38	24	36	22	18	105123 • 105124 • 105125
RHC105.1616.41	16	16	104	34	16	48	24	36	22	28	105123 • 105124 • 105125
LHC105.0808.21	8	8	99	29	8	32	19	26	13	18	105123 • 105124 • 105125
LHC105.1212.21	12	12	99	29	12	38	19	26	18	18	105123 • 105124 • 105125
LHC105.1616.21	16	16	104	34	16	38	24	36	22	18	105123 • 105124 • 105125

通过曲型接头供给冷却液
Coolant supply through cranked fitting

R/LHC105.08.../.1010.11 无内冷
R/LHC105.08.../.1010.11 without trough coolant

配件
Spare Parts

刀杆 Toolholder	锁紧螺钉 Clamping Screw	TORX PLUS®扳手 TORX PLUS® Wrench
R/LHC105...	**6.075T15P**	**T15PQ**

刀杆
Toolholder

962

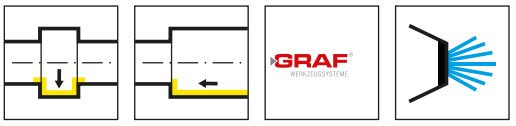

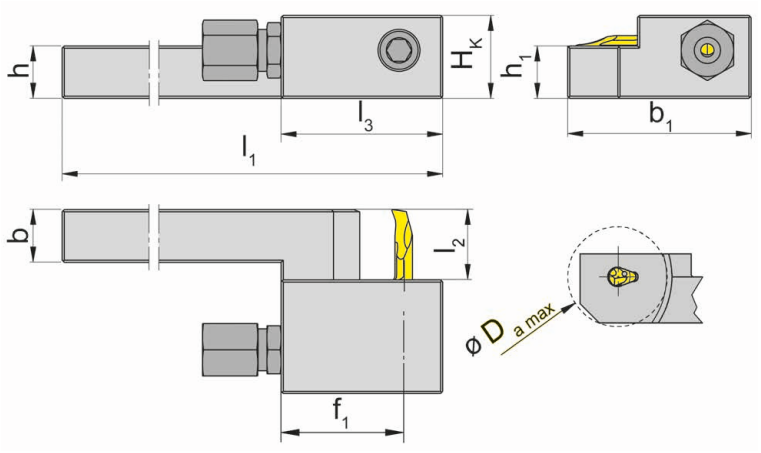

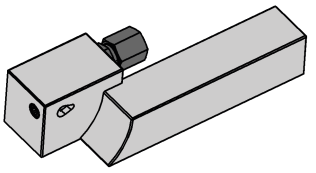

R=右手型-如图
R = right hand version shown

L=左手型
L = left hand version

产品型号 Part number	h	b	f_1	l_1	l_3	h_1	H_K	b_1	l_2	$D_{a\,max}$	HWS
962.08.01.R.IK	8	8	27	130	37	8	15	42	18	30	105123 • 105124 • 105125
962.08.02.L.IK	8	8	27	130	37	8	15	42	18	30	105123 • 105124 • 105125
962.10.01.R.IK	10	10	27	130	37	10	17	42	18	30	105123 • 105124 • 105125
962.10.02.L.IK	10	10	27	130	37	10	17	42	18	30	105123 • 105124 • 105125
962.10.03.R.IK	10	10	27	130	37	10	17	57	33	30	105123 • 105124 • 105125
962.10.04.L.IK	10	10	27	130	37	10	7	57	33	30	105123 • 105124 • 105125
962.12.01.R.IK	12	12	27	130	37	12	19	42	18	30	105123 • 105124 • 105125
962.12.02.L.IK	12	12	27	130	37	12	19	42	18	30	105123 • 105124 • 105125
962.12.03.R.IK	12	12	27	130	37	12	19	57	33	30	105123 • 105124 • 105125
962.12.04.L.IK	12	12	27	130	37	12	19	57	33	30	105123 • 105124 • 105125
962.16.01.R.IK	16	16	27	130	37	16	23	42	18	34	105123 • 105124 • 105125
962.16.02.L.IK	16	16	27	130	37	16	23	42	18	34	105123 • 105124 • 105125
962.16.03.R.IK	16	16	27	130	37	16	23	57	33	34	105123 • 105124 • 105125
962.16.04.L.IK	16	16	27	130	37	16	23	57	33	34	105123 • 105124 • 105125
962.20.01.R.IK	20	20	27	130	37	20	27	42	18	34	105123 • 105124 • 105125
962.20.02.L.IK	20	20	27	130	37	20	27	42	18	34	105123 • 105124 • 105125

内冷装置
Coolant through fitting

刀杆
Toolholder

963

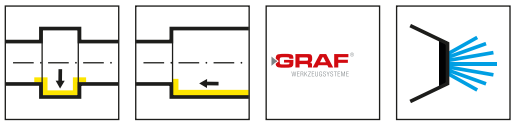

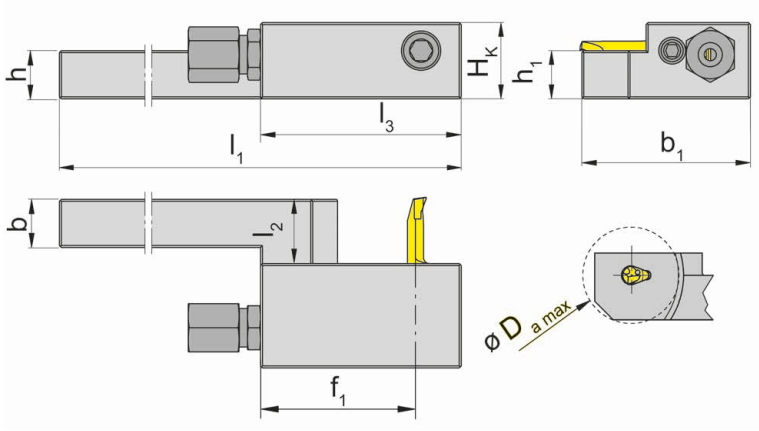

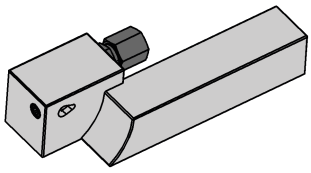

R=右手型-如图
R = right hand version shown

L=左手型
L = left hand version

产品型号 Part number	h	b	f_1	l_1	l_3	h_1	H_K	b_1	l_2	$D_{a\,max}$	HWS
963.12.01.R.IK	12	12	40	130	50	12	19	42	18	46	105123 • 105124 • 105125
963.12.02.L.IK	12	12	40	130	50	12	19	42	18	46	105123 • 105124 • 105125
963.16.01.R.IK	16	16	45	130	50	16	23	42	18	52	105123 • 105124 • 105125
963.16.02.L.IK	16	16	45	130	50	16	23	42	18	52	105123 • 105124 • 105125

内冷装置
Coolant through fitting

刀杆
Toolholder

AIH

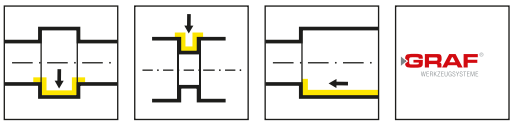

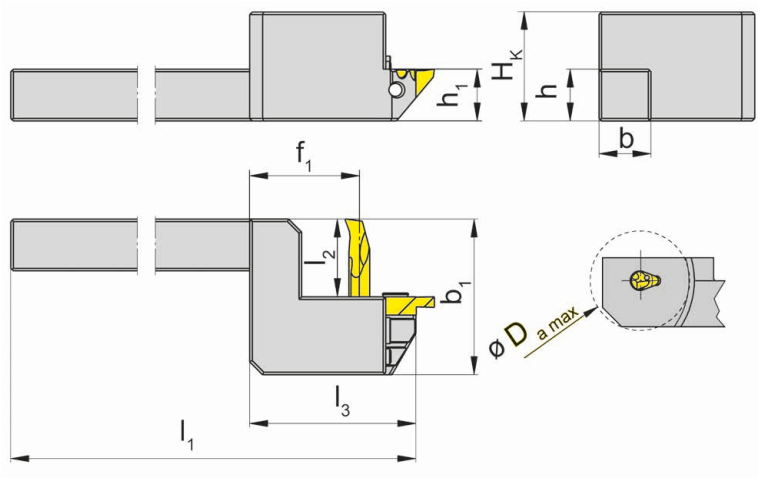

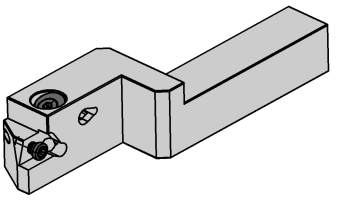

R=右手型-如图
R = right hand version shown

L=左手型
L = left hand version

产品型号 Part number	h	b	f_1	l_1	l_3	h_1	H_K	b_1	l_2	$D_{a\,max}$	HWS
AIH.974.R.1212.K04	12	12	23	130	35	12	19	30	15	20	105123 • 105124 • 105125 • 274040R
AIH.974.R.1616.K04	16	16	26	130	38	16	23	30	15	26	105123 • 105124 • 105125 • 274040R
AIH.974.R.2020.K04	20	20	29	130	38	20	23	30	15	32	105123 • 105124 • 105125 • 274040R

配件
Spare Parts

刀杆 Toolholder	锁紧螺钉 Clamping Screw	TORX PLUS®扳手 TORX PLUS® Wrench
AIH...	**6.075T15P**	**T15PQ**

常规刀柄
Basic toolholder

HC105

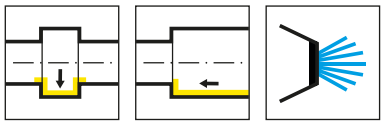

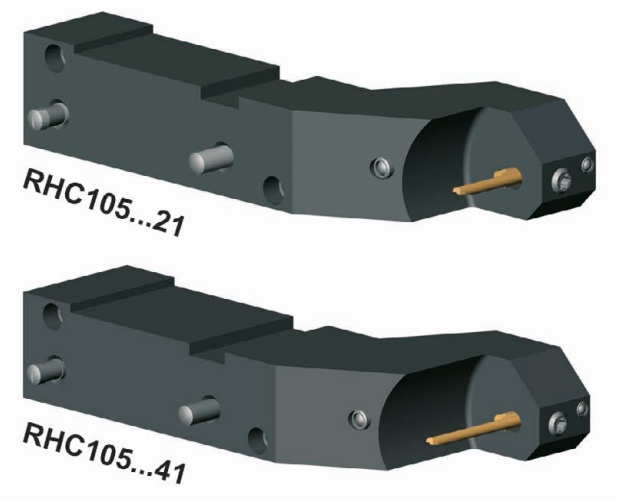

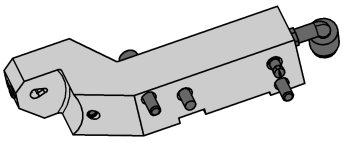

产品型号 Part number	机床型号 Machine type	刀片 Insert	HWS	HMS
RHC105.0710.21	EvoDECO 10	105...21 l_2以内可达15 mm	105123 • 105124 • 105125	Tornos
RHC105.0710.41	EvoDECO 10	105...41 l_2 以内可达25 mm	105123 • 105124 • 105125	Tornos

用于机床Tornos
Tool for Tornos

配件
Spare Parts

常规刀柄 Basic toolholder	**锁紧螺钉** Clamping Screw	**旋紧型角度接头** SMC angled screw coupling	**TORX PLUS®扳手** TORX PLUS® Wrench
RHC105...	**6.075T15P**	**KQ2L06-M5**	**T15PQ**

常规刀柄
Basic toolholder

L760

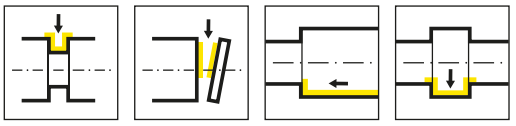

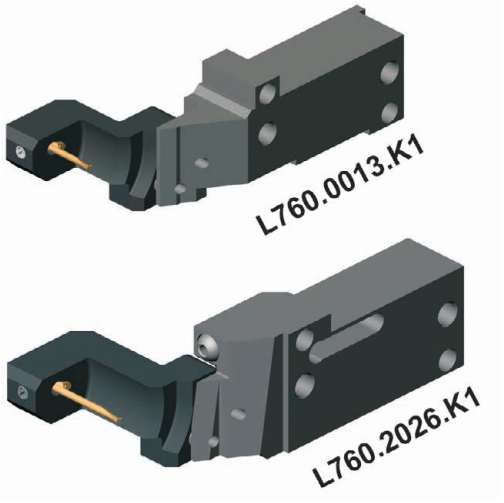

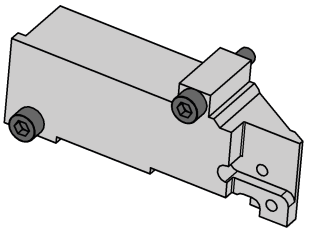

产品型号 Part number	刀片 Insert	刀夹 Cassette	机床型号 Machine type
L760.0013.K1	105...21 l_2以内可达15 mm	RKC760.0105.21	EvoDECO 16
L760.2026.K1	105...41 l_2 以内可达25 mm	RKC760.0105.41	EvoDECO 20/EvoDECO 32

用于机床Tornos
Tool for Tornos

刀夹
Cassette

KC760

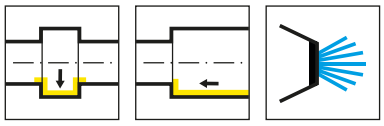

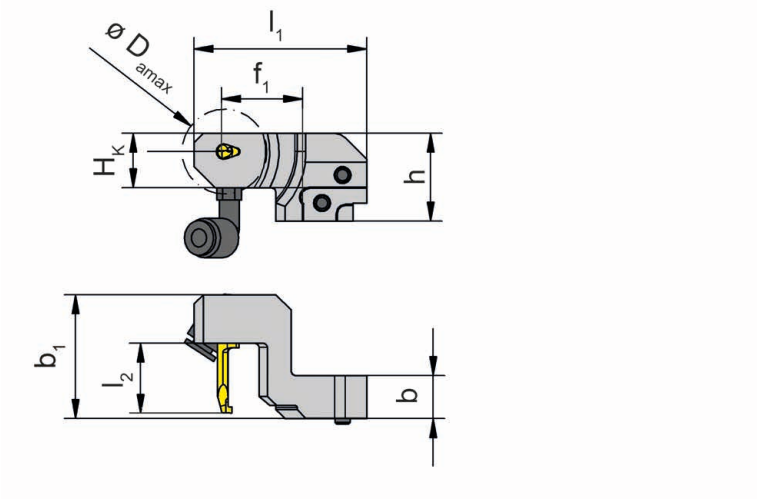

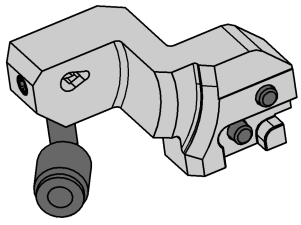

产品型号 Part number	l_1	l_2	b_1	b	h	H_K	f_1	$D_{a\,max}$	HWS
RKC760.0105.21	57	24.9	40.9	14.2	29	18	26	28	105123 • 105124 • 105125
RKC760.0105.41	57	34.9	50.9	14.2	29	18	26	28	105123 • 105124 • 105125

Tornos基础刀柄L760的刀具
Tool for Tornos Basic toolholder L760

配件
Spare Parts

刀夹 Cassette	锁紧螺钉 Clamping Screw	TORX PLUS®扳手 TORX PLUS® Wrench
RKC760...	**5.12T20P**	**T15PQ**

常规刀柄
Basic toolholder

BGT

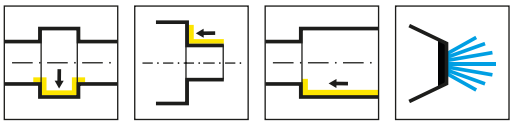

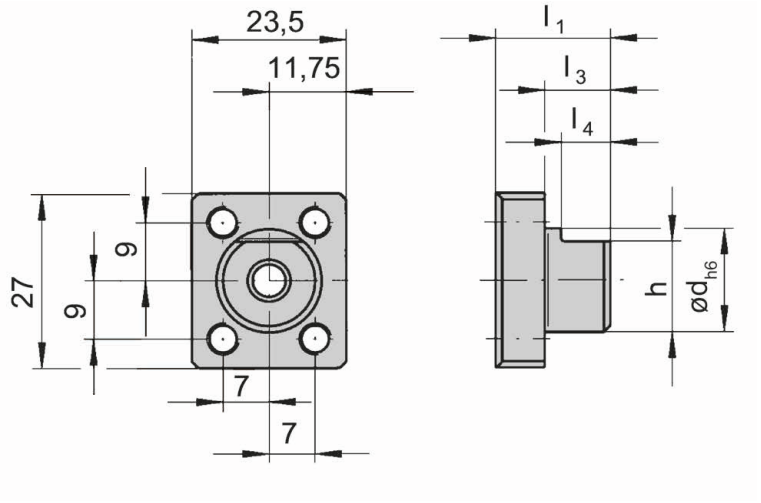

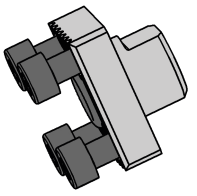

产品型号 Part number	h	d	l_1	l_3	l_4	机床型号 Machine type	HMS
BGT001.1627.10	14	16	17.5	10	7.5	Star	锯齿状 90° / T3

常规刀柄
Basic toolholder

BGT

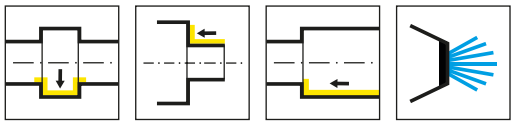

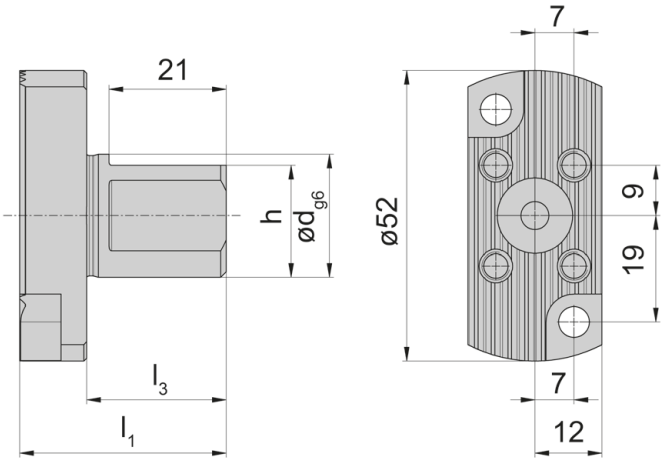

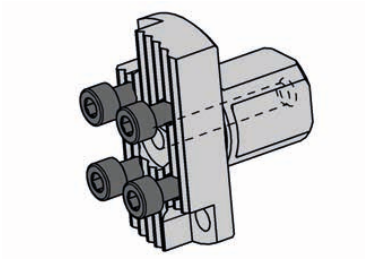

产品型号 Part number	h	d	l_1	l_3	l_4	HMS
BGT001.0R22.25	20	22	37	25	21	锯齿状 90° / T3

可调刀杆
Adjustable holder

BKT

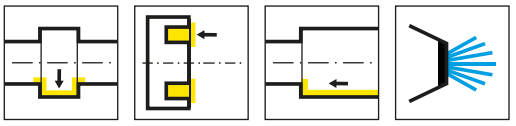

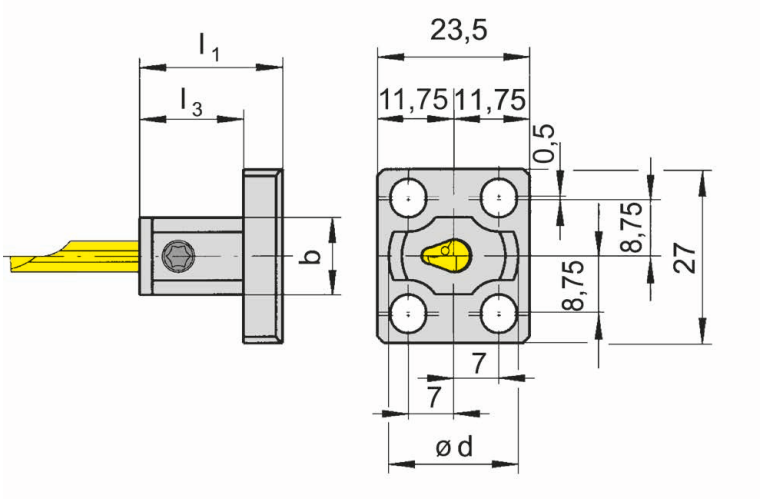

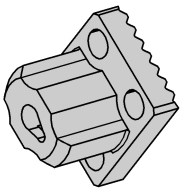

产品型号 Part number	d	l_1	l_3	b	HWS	HMS
BKT105.2327.01	20	22	16	12	105123 • 105124 • 105125	锯齿状 90° / T3

配件
Spare Parts

可调刀杆 Adjustable holder	锁紧螺钉 Clamping Screw	TORX PLUS®扳手 TORX PLUS® Wrench
BKT105.2327.01	**6.075T15P**	**T15PQ**

常规刀柄
Basic toolholder

BGT

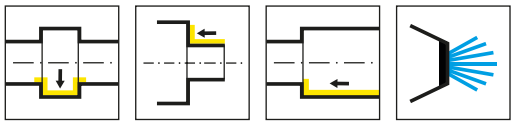

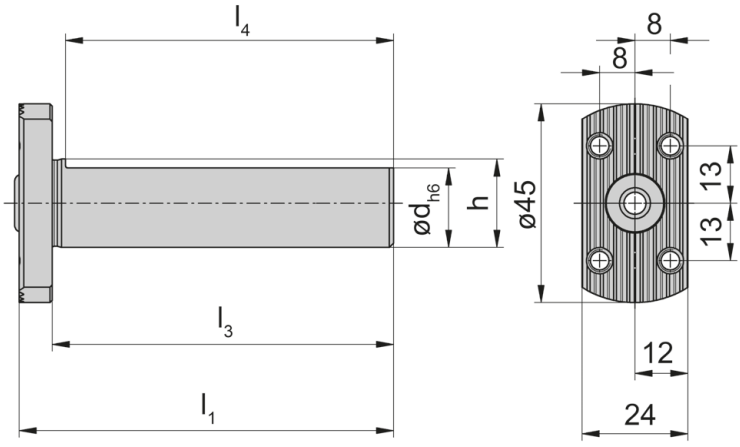

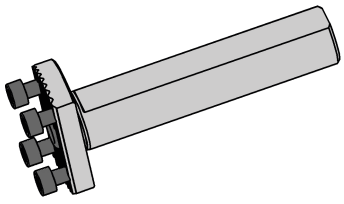

产品型号 Part number	h	d	l_1	l_3	l_4	机床型号 Machine type	HMS
BGT001.0010.50	9	10	57.5	50	47		锯齿状 90° / T3
BGT001.0016.21	14	16	28.5	21	18	Star	锯齿状 90° / T3
BGT001.0R16.21	14	16	28.5	21	18	Star	锯齿状 90° / T3
BGT001.0020.100	18	20	107.5	100	97	Tornos	锯齿状 90° / T3
BGT001.0022.30	20	22	36.35	30	27	Star	锯齿状 90° / T3
BGT001.0025.70	23	25	77.5	70	67		锯齿状 90° / T3

BGT001.0022.30无内冷
BGT001.0022.30 without through coolant supply

常规刀柄
Basic toolholder

BGT

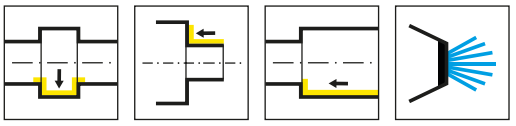

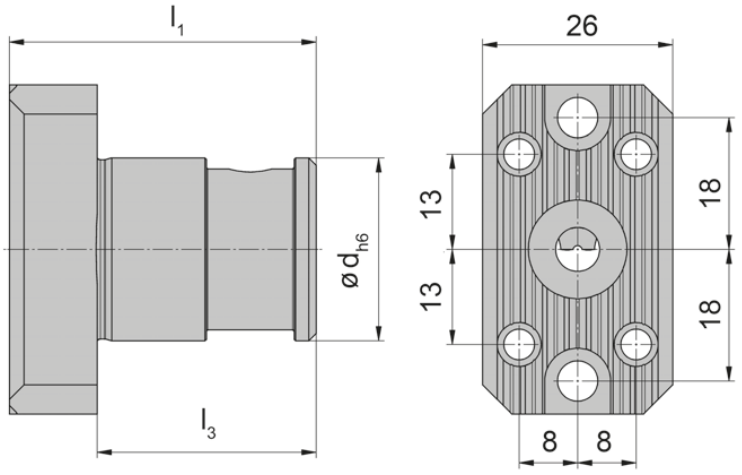

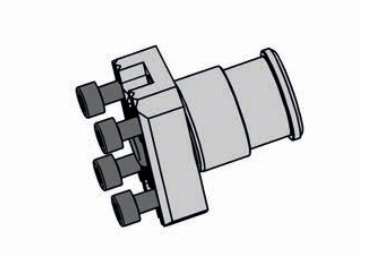

产品型号 Part number	d	l_1	l_3	机床型号 Machine type	HMS
BGT001.C025.30IK	25	42	30	Citizen L20X	锯齿状 90° / T3

可调刀杆
Adjustable holder

BKT

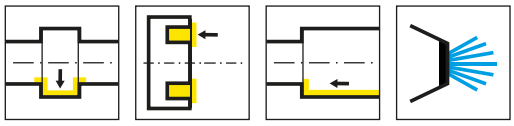

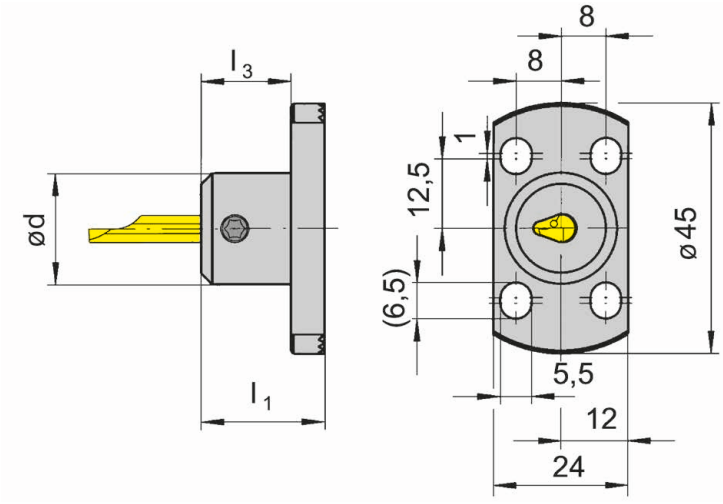

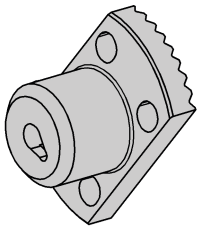

产品型号 Part number	d	l_1	l_3	HWS	HMS
BKT105.2445.01	20	22	16	105123 • 105124 • 105125	锯齿状 90° / T3
BKT105.2445.02	20	32	26	105225	锯齿状 90° / T3

配件
Spare Parts

可调刀杆 Adjustable holder	锁紧螺钉 Clamping Screw	TORX PLUS®扳手 TORX PLUS® Wrench
BKT105...	**6.075T15P**	**T15PQ**

可调刀杆
Adjustable holder

BKT

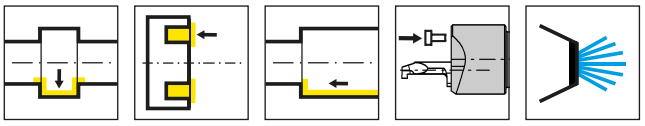

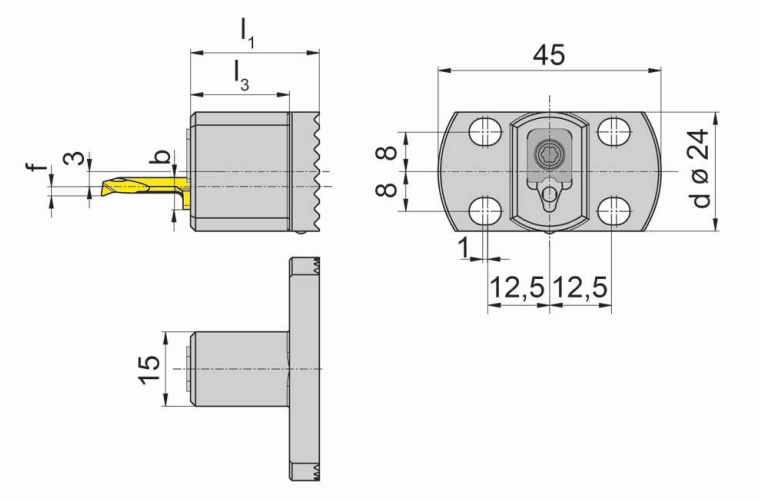

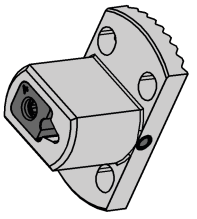

产品型号 Part number	l_1	d	l_3	b	HWS	HMS
BKT105.2445.S.03	26	24	20	5.9	105123	锯齿状 90° / T3
BKT105.2445.S.04	26	24	20	6.4	105124	锯齿状 90° / T3
BKT105.2445.S.05	26	24	20	7	105125	锯齿状 90° / T3

f见105系列刀片
f see inserts type 105

配件
Spare Parts

可调刀杆 Adjustable holder	压板 Clamping element	TORX PLUS®扳手 TORX PLUS® Wrench
BKT105.2445.S.03	**010.0105.03**	**T15PL**
BKT105.2445.S.04	**010.0105.04**	**T15PL**
BKT105.2445.S.05	**010.0105.05**	**T15PL**

GRAF常规刀柄 型号 G
Basic toolholder Graf

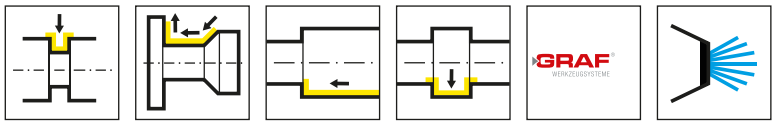

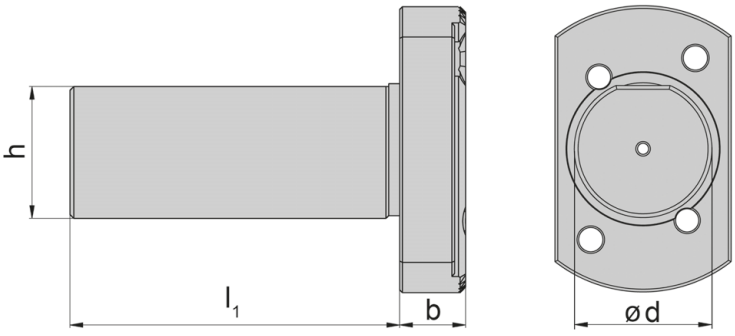

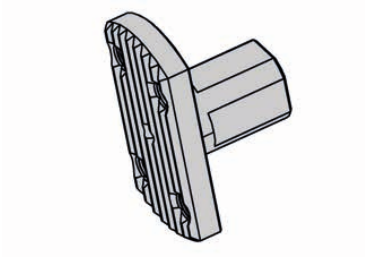

产品型号 Part number	d	l_1	h	b	机床型号 Machine type
G.016.021	16	21	14	6	Star
G.016.040	16	40	14	6	Traub/Manurhin
G.034.040	3/4“	40	18	6	Citizen
G.034.050	3/4“	50	18	6	Citizen
G.034.120	3/4“	120	18	6	Citizen
G.020.030	20	30	18	6	Citizen
G.020.040	20	40	18	6	Citizen
G.020.100	20	100	18	6	Citizen
G.020.150	20	150	18	6	Citizen
G.022.023	22	23	20	6	Star
G.022.030	22	30	20	6	Star
G.022.070	22	70	20	6	Star
G.025.060	25	60	23	12	Hanwha
G.025.070	25	70	23	6	Manurhin/Tornos
G.025.100	25	100	23	6	Manurhin/Tornos
G.025.160	25	160	23	6	Manurhin/Tornos
G.010.060	1“	60	23	12	Citizen
G.010.100	1“	100	23	6	Citizen
G.028.006	28	6	26	6	Hanwha
G.028.080	28	80	26	12	Traub
G.034.020	34	20	32	12	Maier
G.034.044	34	44	32	12	Maier/Hanwha

单位:inch和mm
Dimensions in inch and mm

GRAF接头
Adaptor Graf

Z

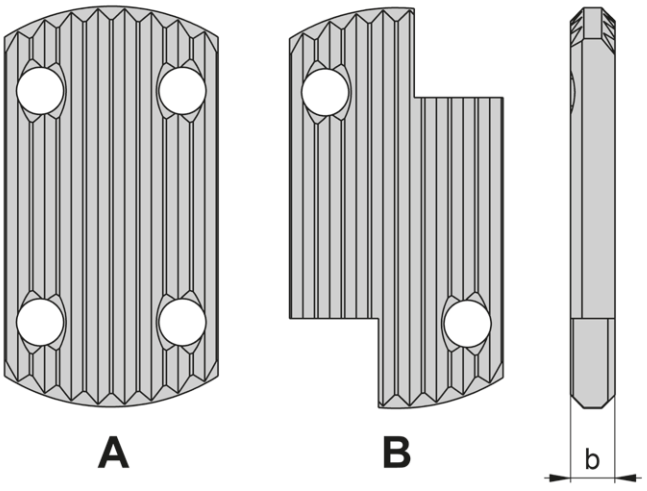

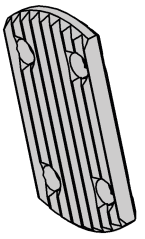

产品型号 Part number	b	形式 Form
Z.5	5	A
Z.10	10	A
Z.15	15	A
Z.20	20	A
Z.25	25	A
Z.30	30	A
Z10SR16/20R	10	B
Z25SR16/20R	25	B
Z30SR16/20R	30	B

背轴加工
Back working

适用于GRAF N型 和 HORN BKT105.2445.01/02和BKT105.2445.S.03/04/05
suitable for holder Graf type N and HORN BKT105.2445.01/02 and BKT105.2445.S.03/04/05

产品编号 **N11**
Part number

适合两刃刀片
For alternatively 2 cartridges

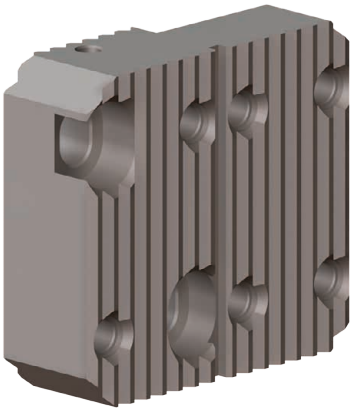

产品编号 **N12**
Part number

适合三刃刀片
For alternatively 3 cartridges

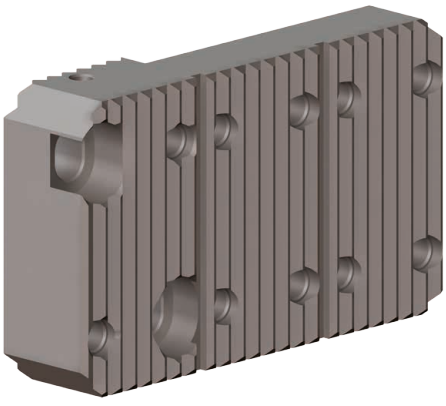

产品编号 **N93IK**
Part number

内冷
with through coolant supply

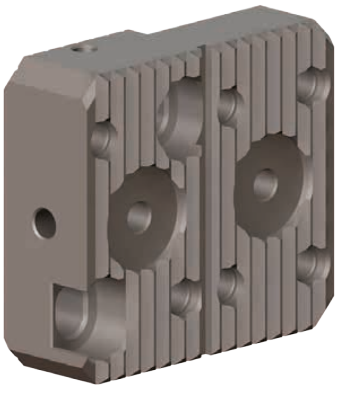

可调刀杆
Adjustable holder

N

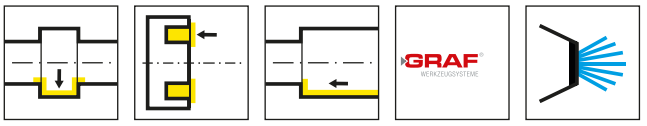

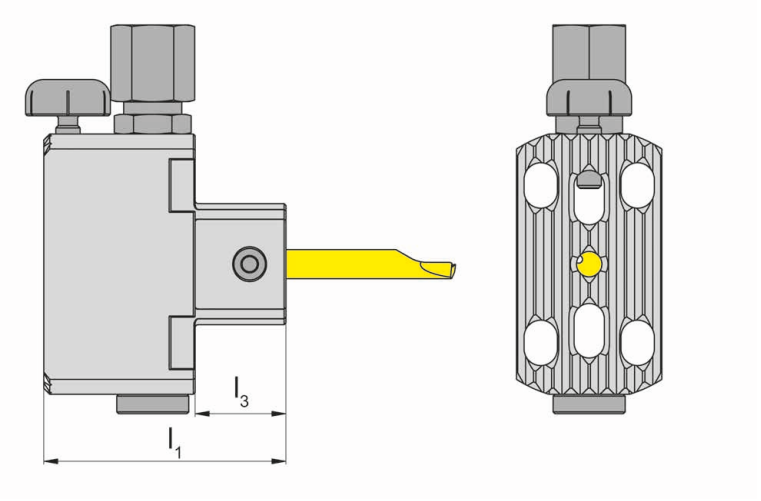

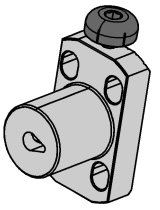

图示=右手型
Picture = right hand cutting version

产品型号 Part number	l_1	l_3	HWS
N.09.IK	40	15	105123 • 105124 • 105125

不包含冷却液管-需要单独订购!
Coolant tube is not included - separate order required!

配件
Spare Parts

可调刀杆 Adjustable holder	**锁紧螺钉** Clamping Screw	**冷却液供应** Coolant supply
N.09.IK	**6.075T15P**	**004.00.19**

可调刀杆
Adjustable holder

N

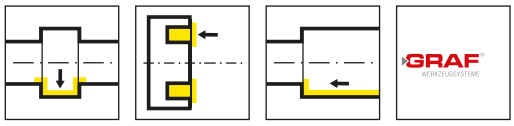

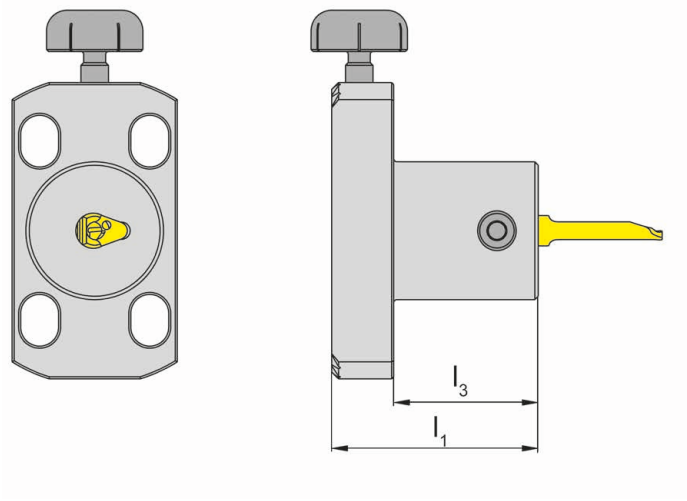

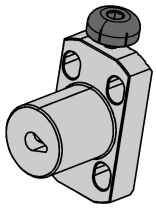

图示=右手型
Picture = right hand cutting version

产品型号 Part number	l_1	l_3	HWS
N.09	30	20	105123 • 105124 • 105125

配件
Spare Parts

可调刀杆 Adjustable holder	**锁紧螺钉** Clamping Screw
N.09	**6.075T15P**

可调刀杆
Adjustable holder

N

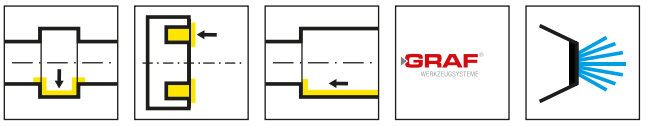

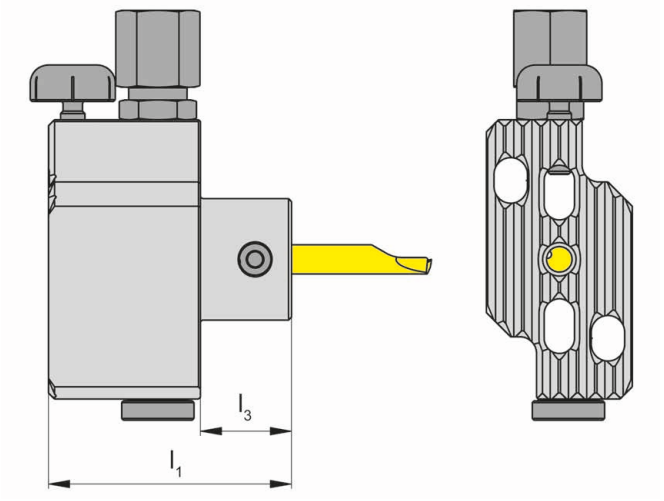

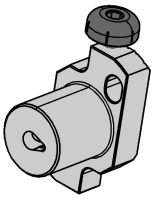

图示=右手型
Picture = right hand cutting version

产品型号 Part number	l_1	l_3	HWS
N.73.IK	40	15	105123 • 105124 • 105125

不包含冷却液管-需要单独订购!
Coolant tube is not included - separate order required!

配件
Spare Parts

可调刀杆 Adjustable holder	**锁紧螺钉** Clamping Screw	**冷却液供应** Coolant supply
N.73.IK	**6.075T15P**	**004.00.19**

可调刀杆
Adjustable holder

N

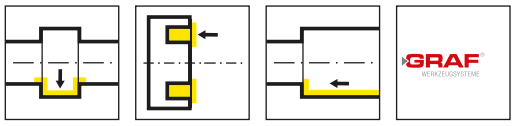

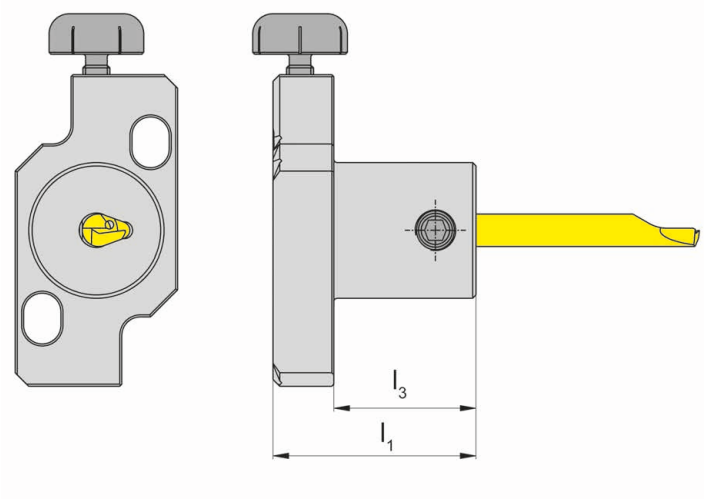

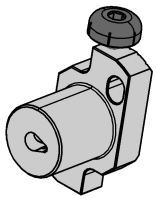

图示=右手型
Picture = right hand cutting version

产品型号 Part number	l_1	l_3	HWS
N.73	30	20	105123 • 105124 • 105125

配件
Spare Parts

可调刀杆 Adjustable holder	锁紧螺钉 Clamping Screw
N.73	**6.075T15P**

可调刀杆
Adjustable holder

N

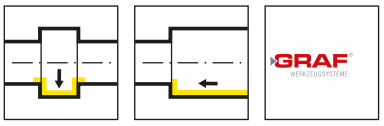

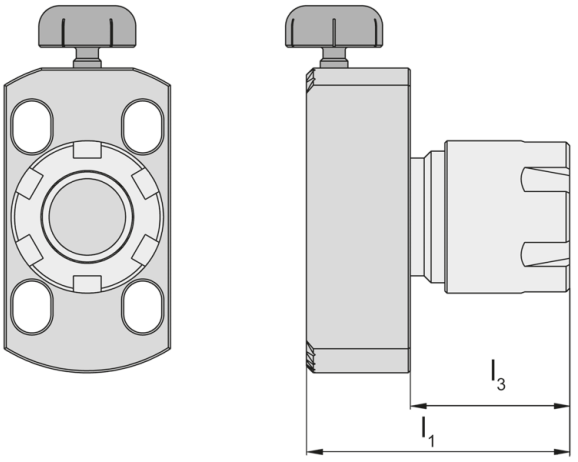

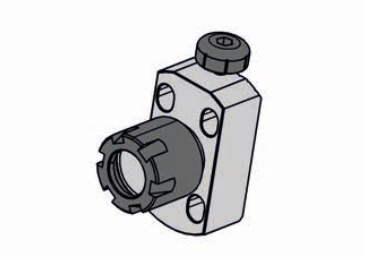

产品型号 Part number	l_1	l_3	锁紧螺母 Clamping nut
N.07	37	18	ER16

可调刀杆
Adjustable holder

N

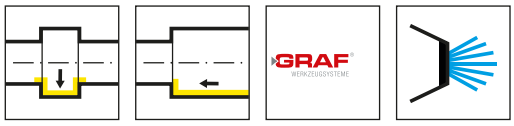

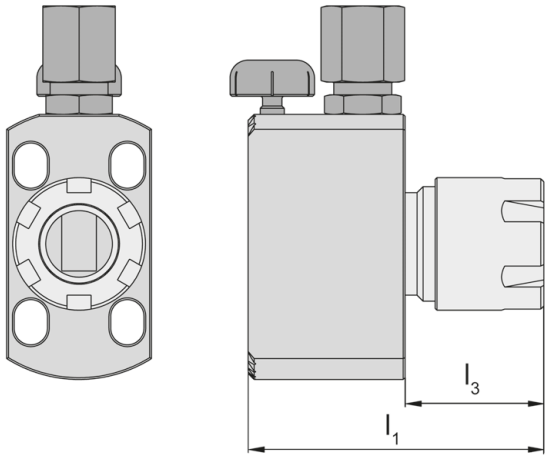

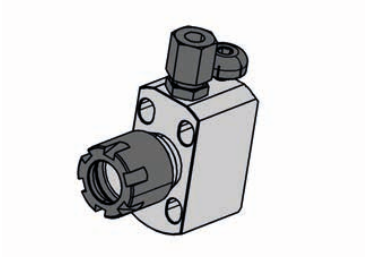

产品型号 Part number	l_1	l_3	锁紧螺母 Clamping nut
N.07.IK	54	18	ER16
N.41.IK	64	26	ER20

不包含冷却液管-需要单独订购！
Coolant tube is not included - separate order required!

配件
Spare Parts

可调刀杆 Adjustable holder	冷却液供应 Coolant supply
N...	**004.00.19**

可调刀杆
Adjustable holder

N

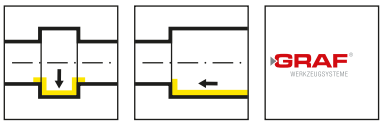

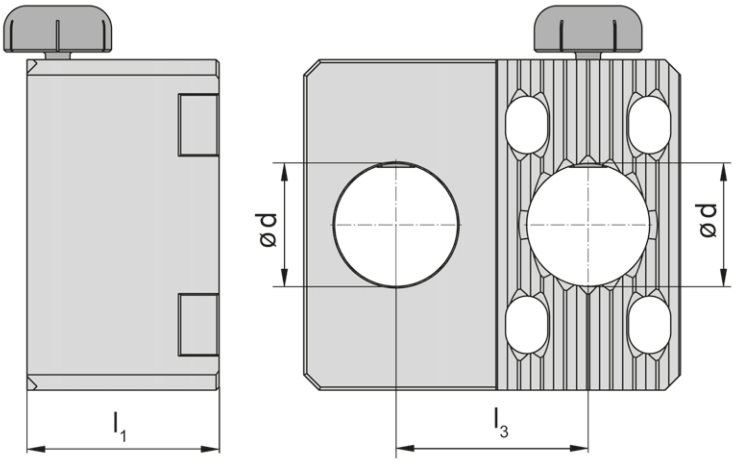

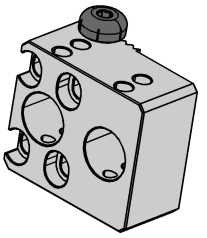

产品型号 Part number	d	l_1	l_3
N.10	16	25	25

不包含筒夹接头-需单独订购！
The collet adaptors are not included - separate order required!

冷却系统标准连接头

Standard connection for coolant supply for pipe Ø 6 mm

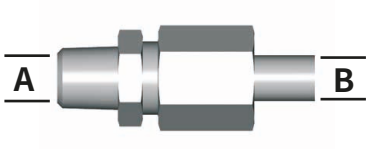

冷却液连接器
垂直锁紧
Connection for coolant supply
straight screwed

产品型号 Part number	A	B
004.00.19	M8 x 1	ø 6 mm
004.00.14	G1/8“	ø 6 mm

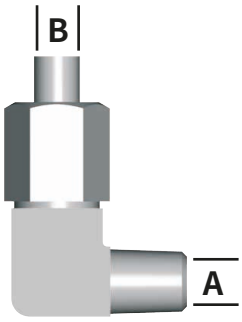

冷却液连接器
带角度固定
Connection for coolant supply
angeled and fix

产品型号 Part number	A	B
004.00.22	M8 x 1	ø 6 mm
004.00.33	G1/8“	ø 6 mm

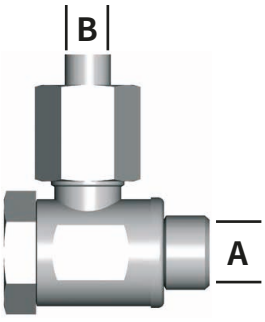

可旋转, 夹紧装配
Swivelling screw-fitting

产品型号 Part number	A	B
004.00.61	M8 x 1	ø 6 mm
004.00.16	G1/8“	ø 6 mm

冷却系统快速接头

Clip connection for coolant supply

快速夹头
Quick connector

M10 x 1 - 004.00.49

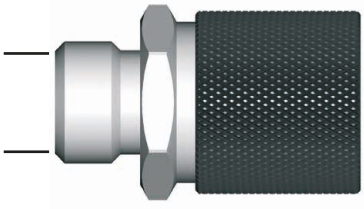

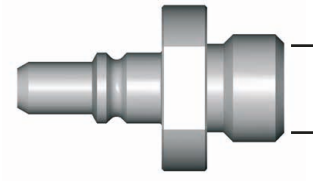

栓塞
Plug

M8 x 1 - 004.00.56
G1/8" - 004.00.57

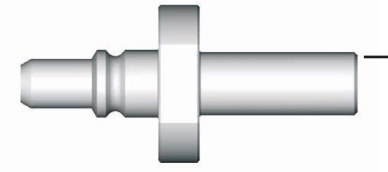

栓塞
Plug

Ø 6 mm - 004.00.59

夹紧螺母
Chucking nut

ER-M

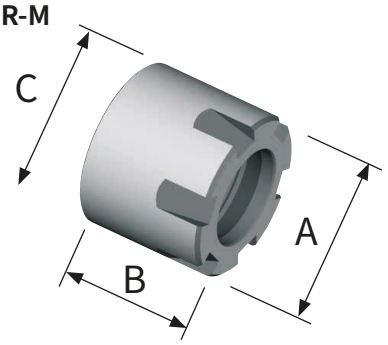

ER-M	A	B	C
62 000 08-ER 8	12	10.8	M10x0.75
62 000 11-ER 11	16	12	M13x0.75
62 000 16-ER 16	22	18	M19x1
62 000 20-ER 20	28	19	M24x1
62 000 25-ER 25	35	20	M30x1

ER-MA 密封 sealed

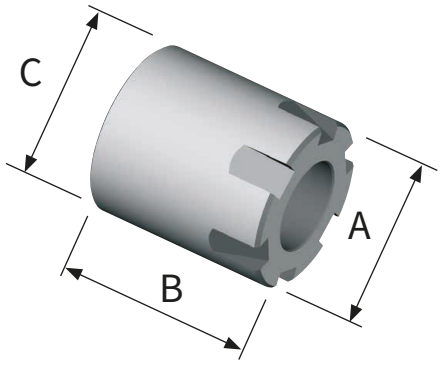

ER-MA	A	B	C
62 600 16-ER 16	22	24.5	M19x1
62 600 20-ER 20	28	26.5	M24x1
62 600 25-ER 25	35	27.5	M30x1

密封圈
用于ER-MA密封螺母

Sealing rings
for chucking nuts ER-MA...

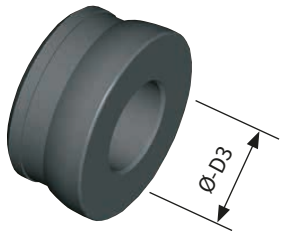

全组合:
completed set:

产品型号 Part number	Ø D3
64 600 16-ER 16	3.0-3.5...9.5-10.0 mm
64 600 20-ER 20	3.0-3.5...12.5-13.0 mm
64 600 25-ER 25	3.0-3.5...15.5-16.0 mm

密封环可单独购买
The sealing rings can be ordered seperately.

例如:
Example:

产品型号 Part number	直径范围 Diameter range	可能自-达 possible from-up to
ER 16 64 600 16 30	3.01 - 3.50	3 - 10
ER 20 64 600 20 45	4.51 - 5.00	3 - 13
ER 25 64 600 25 80	8.01 - 8.50	3 - 16

高度调节装置
Device for height adjusting

HVR.40

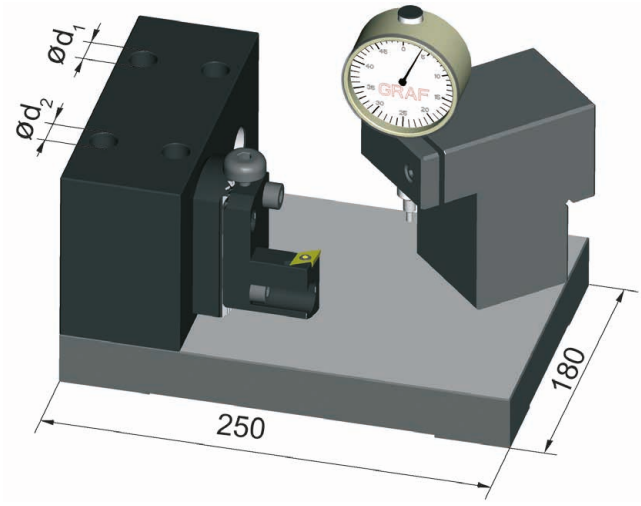

产品型号 Part number	d_1	d_2	机床型号 Machine type
HVR.40.16.22	16	22	Star
HVR.40.20.22	20	22	Star
HVR.40.20.25	20	25	Tornos
HVR.40.20.28	20	28	Hanwha
HVR.40.25.28	25	28	Hanwha
HVR.40.25.33	25	33	Hanwha
HVR.40.25.34	25	34	Hanwha
HVR.40.30.34	30	34	Maier
HVR.40.34.10	3/4“	1“	Citizen

单位:inch和mm
Dimensions in inch and mm

刀杆
Toolholder

B105

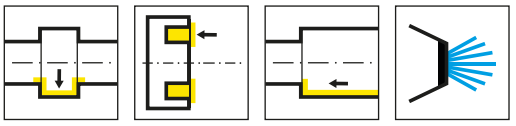

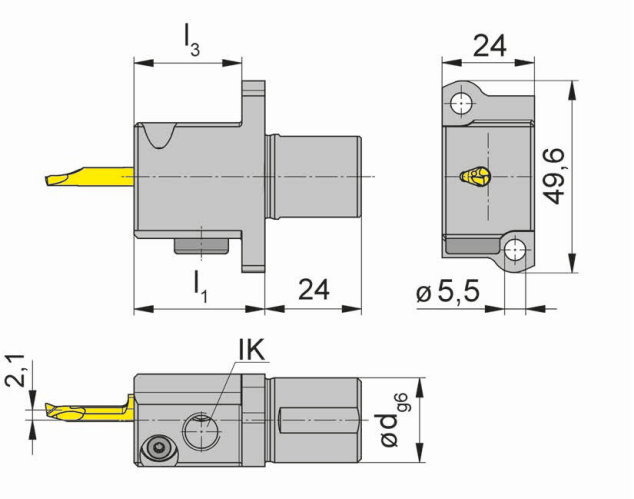

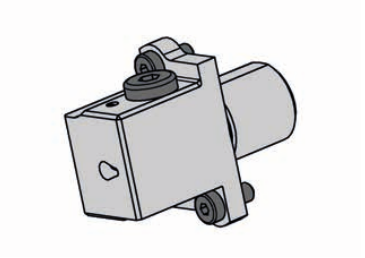

L=左手型
L = left hand version

产品型号 Part number	d	l_1	l_3	HWS	HMS
LB105.A022.26.31	22	35	29	105123 • 105124 • 105125	Star

适用于Star Swiss机床:
ECAS-12/20, SB16D/E, SR-20, SR20J/JN, RS-20RII, RS-20RIII, RS-20RIV, RS-32J/JN, SW-12RIII
Swiss Type Machines Star:
ECAS-12/20, SB16D/E, SR-20, SR20J/JN, RS-20RII, RS-20RIII, RS-20RIV, RS-32J/JN, SW-12RII

配件
Spare Parts

刀杆 Toolholder	TORX PLUS®扳手 TORX PLUS® Wrench	螺钉 Screw Plug
LB105.A022.26.31	**T10PL**	**18.908**

刀杆
Toolholder

HF.N

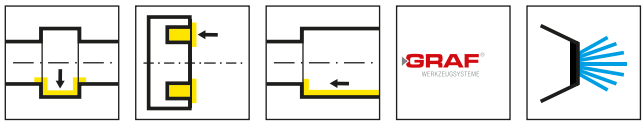

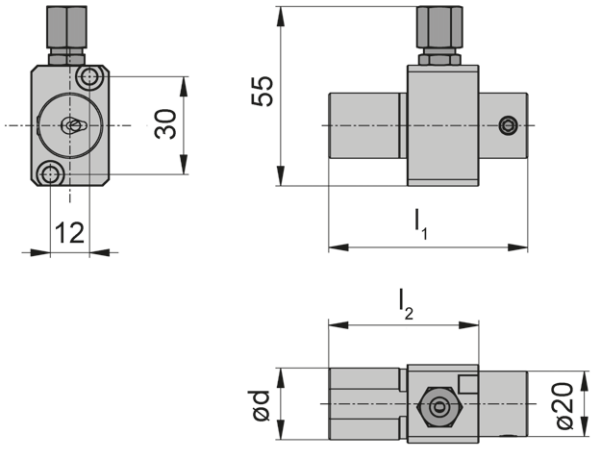

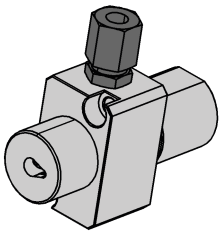

产品型号 Part number	d	l_1	l_2	HWS
RHF.N.145.H105.S1.IK	22	61	46	105123 • 105124 • 105125

适用于Star Swiss机床: SW-20
Swiss Type Machines Star: SW-20

不包含冷却液管-需要单独订购!
Coolant tube is not included - separate order required!

刀杆
Toolholder

HF.N

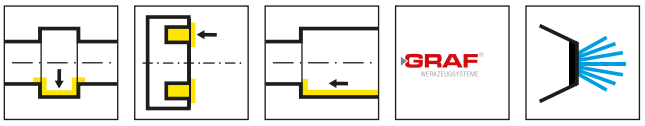

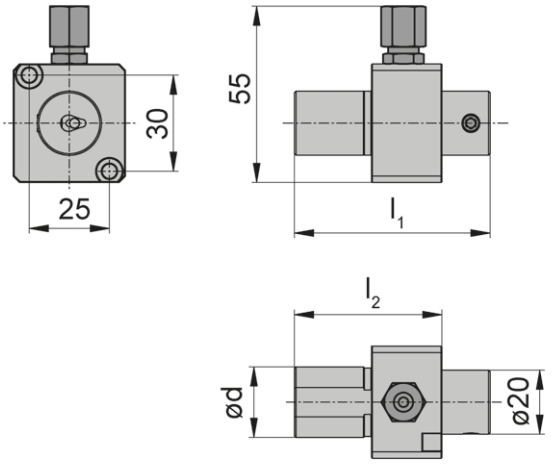

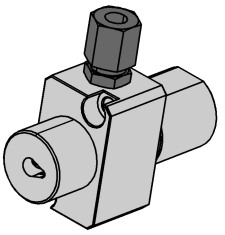

产品型号 Part number	d	l_1	l_2	HWS
RHF.N.151.H105.S2.IK	22	61	46	105123 • 105124 • 105125

适用于Star Swiss机床: SW-20
Swiss Type Machines Star: SW-20

不包含冷却液管-需要单独订购!
Coolant tube is not included - separate order required!

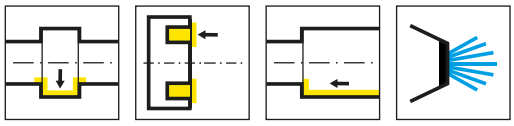

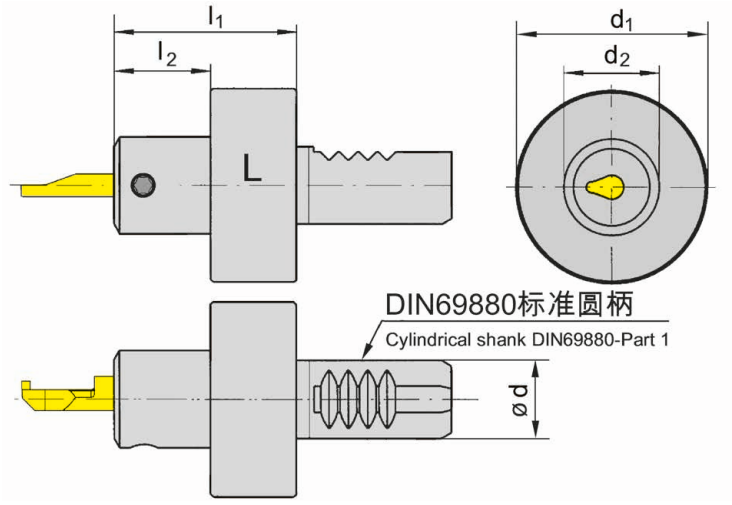

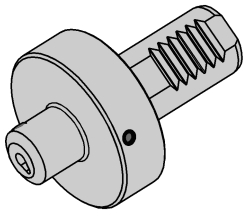

L=左手型-如图
L = left hand version shown

R=右手型
R = right hand version

产品型号 Part number	d	l_1	l_2	d_2	d_1	HWS
VDI16.R105.20.01	16	38	20	20	40	105123 • 105124 • 105125
VDI20.R105.20.01	20	38	20	20	50	105123 • 105124 • 105125
VDI25.R105.20.01	25	38	20	20	58	105123 • 105124 • 105125
VDI30.R105.20.01	30	38	20	20	68	105123 • 105124 • 105125
VDI40.R105.20.01	40	38	20	20	83	105123 • 105124 • 105125
VDI16.L105.20.01	16	38	20	20	40	105123 • 105124 • 105125
VDI20.L105.20.01	20	38	20	20	50	105123 • 105124 • 105125
VDI25.L105.20.01	25	38	20	20	58	105123 • 105124 • 105125
VDI30.L105.20.01	30	38	20	20	68	105123 • 105124 • 105125
VDI40.L105.20.01	40	38	20	20	83	105123 • 105124 • 105125

配件
Spare Parts

刀杆 Toolholder	锁紧螺钉 Clamping Screw	TORX PLUS®扳手 TORX PLUS® Wrench
VDI16...	**6.075T15P**	**T15PQ**

刀杆
Toolholder

B105C

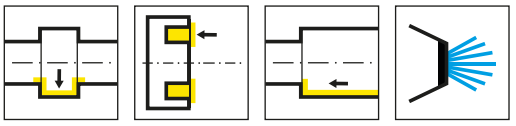

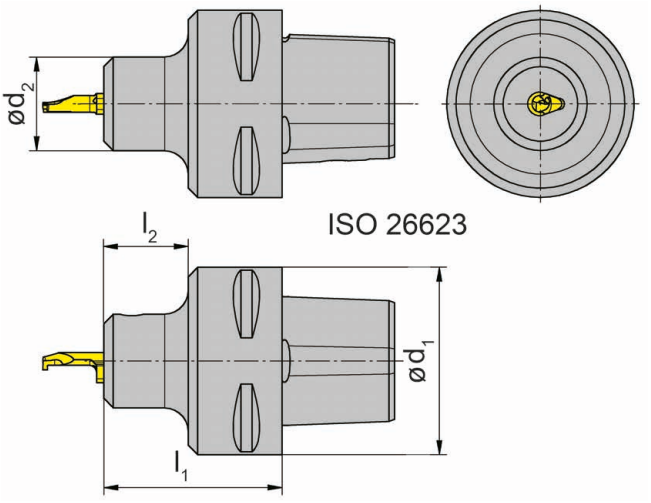

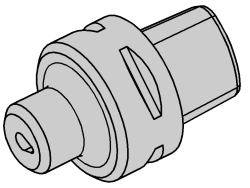

R=右手型-如图
R = right hand version shown

L=左手型
L = left hand version

产品型号 Part number	d_1	d_2	l_1	l_2	HWS
RB105.00C3.20.1.01	32	20	30	15	105123 • 105124 • 105125
RB105.00C4.20.1.01	40	20	38	18	105123 • 105124 • 105125
RB105.00C5.20.1.01	50	20	38	18	105123 • 105124 • 105125
RB105.00C6.20.1.01	63	20	42	20	105123 • 105124 • 105125
LB105.00C3.20.1.01	32	20	30	15	105123 • 105124 • 105125
LB105.00C4.20.1.01	40	20	38	18	105123 • 105124 • 105125
LB105.00C5.20.1.01	50	20	38	18	105123 • 105124 • 105125
LB105.00C6.20.1.01	63	20	42	20	105123 • 105124 • 105125

配件
Spare Parts

刀杆 Toolholder	锁紧螺钉 Clamping Screw	TORX PLUS®扳手 TORX PLUS® Wrench
R/LB105...	**6.075T15P**	**T15PQ**

B105C

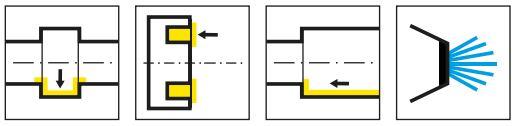

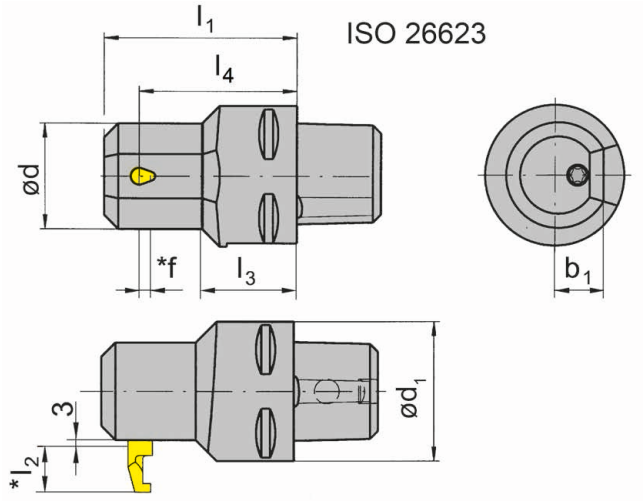

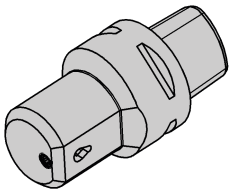

产品型号 Part number	d_1	l_3	d	l_1	b_1	l_4	机床型号 Machine type	HWS
RB105.00C3.2.2.01	32	17	30	55	14	45	INDEX MS32	105123 • 105124 • 105125
RB105.00C3.2.2.02	32	15	36	55	18	45	INDEX MS32	105123 • 105124 • 105125
RB105.00C4.2.2.01	40	26	30	55	14	45	INDEX MS52	105123 • 105124 • 105125
RB105.00C4.2.2.02	40	22	36	55	18	45	INDEX MS52	105123 • 105124 • 105125

f,l2见105系列刀片
f, l2 see inserts type 105

配件
Spare Parts

刀杆 Toolholder	锁紧螺钉 Clamping Screw	TORX PLUS®扳手 TORX PLUS® Wrench
RB105...	**6.075T15P**	**T15PQ**

刀杆
Toolholder

B105TS

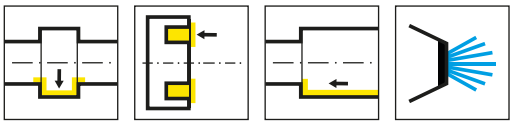

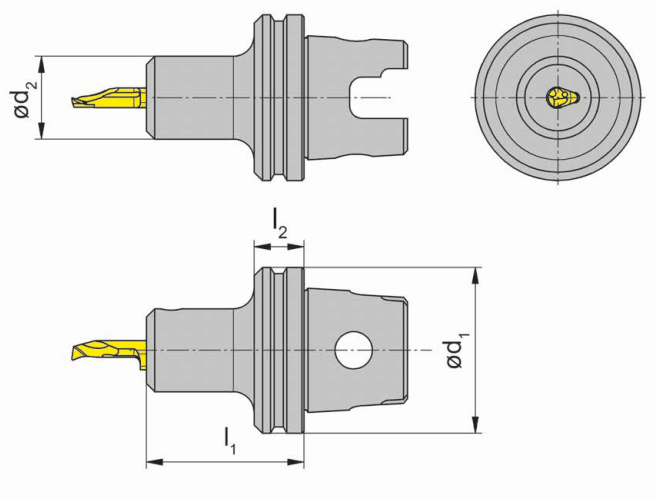

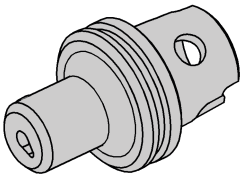

R=右手型-如图
R = right hand version shown

L=左手型
L = left hand version

产品型号 Part number	d_1	d_2	l_1	l_2	HWS
RB105.TS40.20.1.01	40	20	38	26	105123 • 105124 • 105125
LB105.TS40.20.1.01	40	20	38	26	105123 • 105124 • 105125

配件
Spare Parts

刀杆 Toolholder	锁紧螺钉 Clamping Screw	TORX PLUS®扳手 TORX PLUS® Wrench
R/LB105.TS40.20.1.01	**6.075T15P**	**T15PQ**

刀杆
Toolholder

B105TS

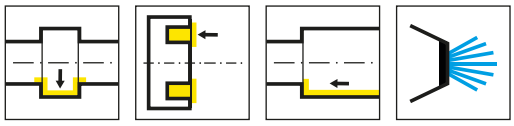

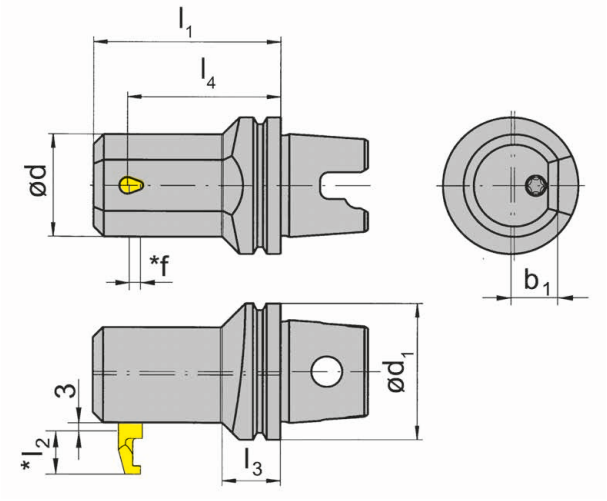

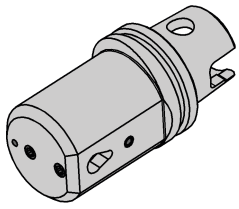

R=右手型-如图
R = right hand version shown

L=左手型
L = left hand version

产品型号 Part number	d_1	l_3	d	l_1	b_1	l_4	HWS
RB105.TS40.2.2.01	40	17	30	55	14	45	105123 • 105124 • 105125
RB105.TS40.2.2.02	40	14	36	55	18	45	105123 • 105124 • 105125
RB105.TS50.2.2.01	50	26	30	55	14	45	105123 • 105124 • 105125
RB105.TS50.2.2.02	50	22	36	55	18	45	105223 • 105224 • 105225

配件
Spare Parts

刀杆 Toolholder	锁紧螺钉 Clamping Screw	TORX PLUS®扳手 TORX PLUS® Wrench
RB105...	**6.075T15P**	**T15PQ**

镗孔杆接纳器
Adaptor for boring bars

001C

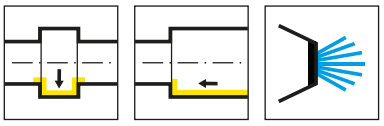

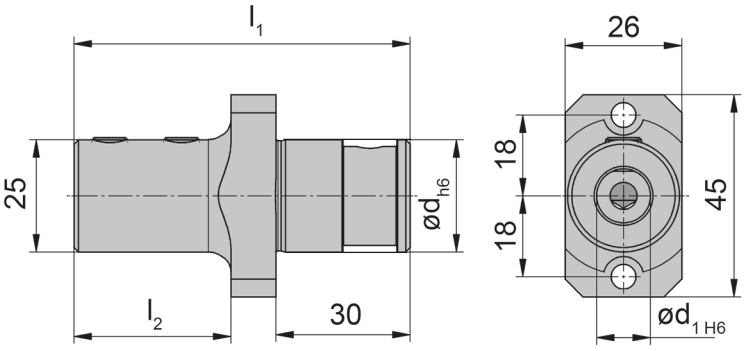

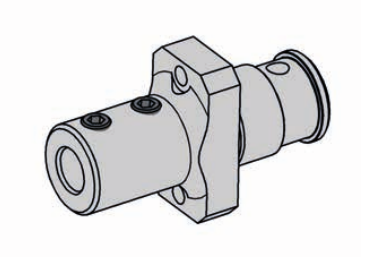

产品型号 Part number	d	l_1	d_1	l_2	机床型号 Machine type
001.C025.12.30IK	25	75	12	35	Citizen L20X

配件
Spare Parts

镗孔杆接纳器 Adaptor for boring bars	**锁紧螺钉** Clamping Screw
001.C025.12.30IK	**8.075.1835**

刀杆
Toolholder

WFB.105

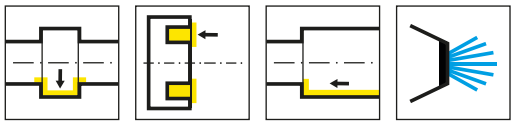

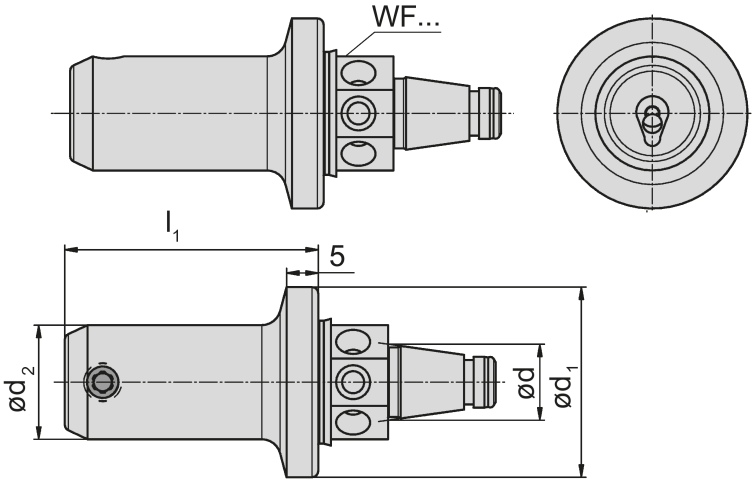

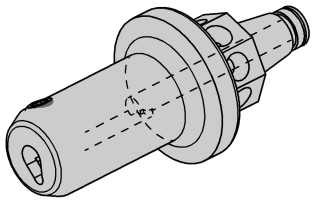

产品型号 Part number	d_1	l_1	d	d_2	HWS	HMS
WFB.2HO.105	30	40	12	18	105123 • 105124 • 105125	WFB
WFB.2HO.105.055	30	55	12	18	105123 • 105124 • 105125	WFB
WFB.3HO.105	50	40	20	18	105123 • 105124 • 105125	WFB
WFB.3HO.105.055	50	55	20	18	105123 • 105124 • 105125	WFB

配件
Spare Parts

刀杆 Toolholder	锁紧螺钉 Clamping Screw	TORX PLUS®扳手 TORX PLUS® Wrench
WFB.2HO.10...	**6.075T15P**	**T15PQ**
WFB.3HO.10...		

刀片
Insert

105

Ø ≥ 0.2 mm

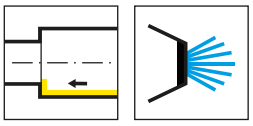

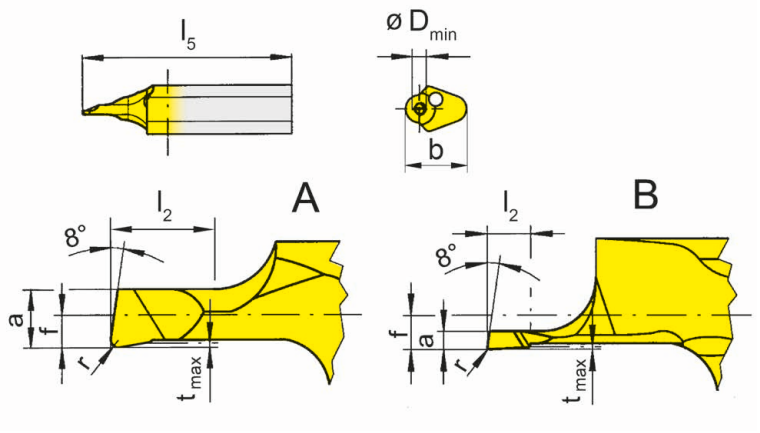

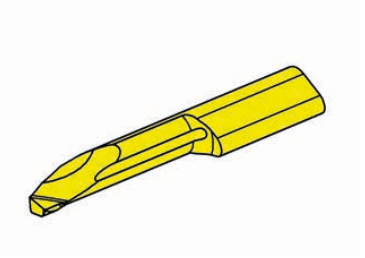

R=右手型-如图
R = right hand version shown

L=左手型
L = left hand version

▲ 库存
on stock

Δ 4周
4 weeks

硬质合金牌号
Carbide grades

产品型号 Part number	r	f	a	b	l_2	l_5	t_{max}	D_{min}	形式 Form	HIS		MG12	EG35
R105.1802.0.02	0.02	1	0.17	5.9	1	23	0.02	0.2	B	105123		▲	Δ
R105.1802.0.03	0.02	1	0.25	5.9	1	23	0.02	0.3	B	105123		▲	Δ
R105.1802.0.05	0.05	1	0.4	5.9	2	23	0.05	0.5	B	105123		▲	▲
R105.1803.0.07	0.05	0.3	0.6	5.9	2	23	0.05	0.7	A	105123		▲	▲
L105.1802.0.02	0.02	1	0.17	5.9	1	23	0.02	0.2	B	105123		Δ	Δ
L105.1802.0.03	0.02	1	0.25	5.9	1	23	0.02	0.3	B	105123		Δ	Δ
L105.1802.0.05	0.05	1	0.4	5.9	2	23	0.05	0.5	B	105123		▲	Δ
L105.1803.0.07	0.05	0.3	0.6	5.9	2	23	0.05	0.7	A	105123		▲	Δ
											P	o	●
											M	-	●
											K	-	o
											N	-	-
											S	-	-
											H	-	-

刀片
Insert

105

Ø ≥ 0.2 mm

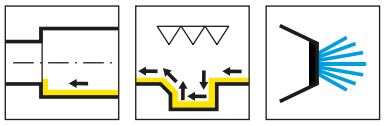

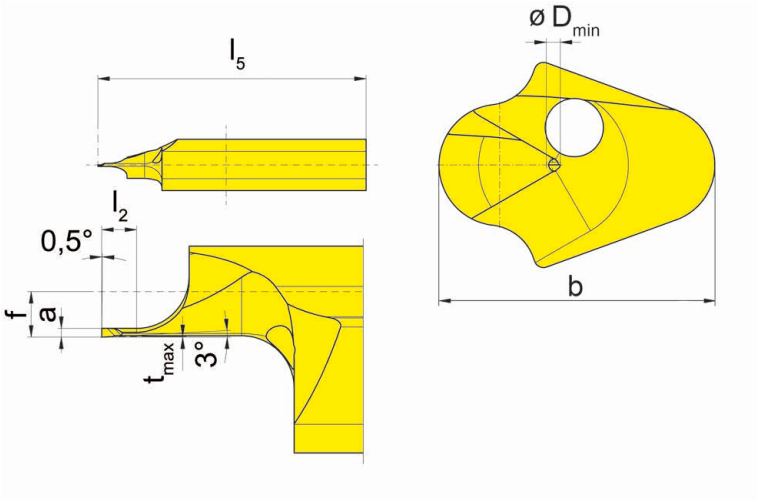

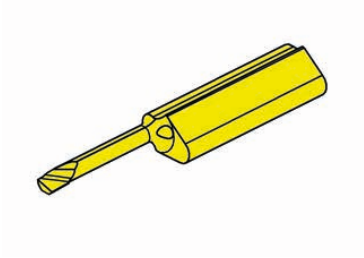

R=右手型-如图
R = right hand version shown

硬质合金牌号
Carbide grades

▲ 库存
on stock

Δ 4周
4 weeks

产品型号 Part number	f	a	b	l_2	l_5	t_{max}	D_{min}	HIS	MG12	AN25	ES15
R105.9013.000.0.02	1.3	0.17	5.9	1	23	0.015	0.2	105123		Δ	Δ
R105.9013.000.0.03	1.3	0.25	5.9	1	23	0.015	0.3	105123		Δ	Δ
R105.9013.000.0.05	1.3	0.4	5.9	2	23	0.02	0.5	105123	Δ	Δ	Δ
R105.9013.000.0.07	1.3	0.6	5.9	2	23	0.02	0.7	105123		Δ	▲

	MG12	AN25	ES15
P	o	●	●
M	-	o	●
K	-	-	o
N	-	-	-
S	-	-	-
H	-	-	-

刀片
Insert

105

Ø ≥ 1 mm

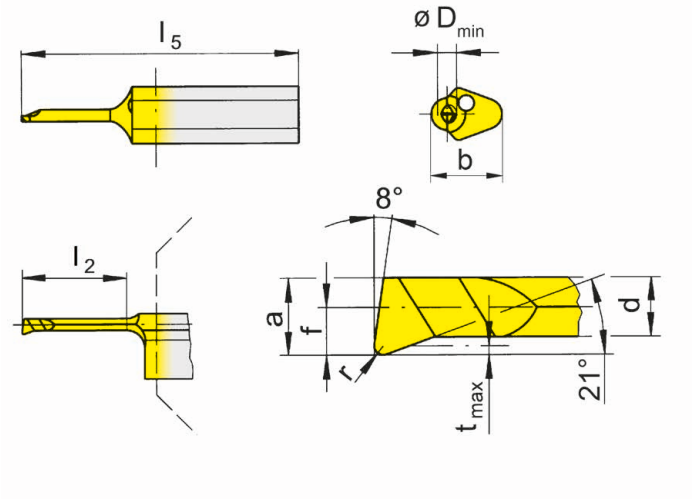

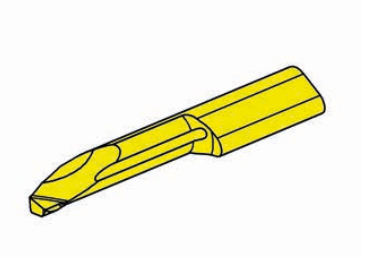

R=右手型-如图
R = right hand version shown

L=左手型
L = left hand version

硬质合金牌号
Carbide grades

▲ 库存
on stock

Δ 4周
4 weeks

产品型号 Part number	r	f	a	d	b	l_2	l_5	t_{max}	D_{min}	HIS	MG12	EG35	TF45	TH35	TI25	TN35
R105.1805.005.0.1	0.05	0.5	0.9	0.65	5.9	4	25	0.1	1	105123		▲	▲			
R105.1805.005.1.1	0.05	0.5	0.9	0.65	5.9	6	25	0.1	1	105123		▲	▲			
R105.1805.005.2.1	0.05	0.5	0.9	0.65	5.9	8	25	0.1	1	105123		Δ	▲	Δ		
R105.1805.0.1	0.1	0.5	0.9	0.65	5.9	4	25	0.1	1	105123	▲	▲	Δ		▲	▲
R105.1805.1.1	0.1	0.5	0.9	0.65	5.9	6	25	0.1	1	105123	Δ	▲			▲	▲
R105.1805.2.1	0.1	0.5	0.9	0.65	5.9	8	25	0.1	1	105123		▲			▲	▲
R105.1813.005.0.15	0.05	1.3	1.4	1.1	5.9	6	25	0.15	1.5	105123		▲	▲	Δ		
R105.1813.005.1.15	0.05	1.3	1.4	1.1	5.9	9	25	0.15	1.5	105123		▲	▲	Δ		
R105.1813.005.2.15	0.05	1.3	1.4	1.1	5.9	12	30	0.15	1.5	105123		▲	▲	Δ		
R105.1813.01.0.15	0.1	1.3	1.4	1.1	5.9	6	25	0.15	1.5	105123		▲		▲	▲	
R105.1813.01.1.15	0.1	1.3	1.4	1.1	5.9	9	25	0.15	1.5	105123		▲		▲	▲	
R105.1813.01.2.15	0.1	1.3	1.4	1.1	5.9	12	30	0.15	1.5	105123		Δ		▲	▲	
L105.1805.005.0.1	0.05	0.5	0.9	0.65	5.9	4	25	0.1	1	105123		Δ	▲			
L105.1805.005.1.1	0.05	0.5	0.9	0.65	5.9	6	25	0.1	1	105123		Δ	▲			
L105.1805.005.2.1	0.05	0.5	0.9	0.65	5.9	8	25	0.1	1	105123			▲			
L105.1805.0.1	0.1	0.5	0.9	0.65	5.9	4	25	0.1	1	105123		▲			▲	▲
L105.1805.1.1	0.1	0.5	0.9	0.65	5.9	6	25	0.1	1	105123		▲			▲	▲
L105.1805.2.1	0.1	0.5	0.9	0.65	5.9	8	25	0.1	1	105123		Δ			Δ	▲
L105.1813.005.0.15	0.05	1.3	1.4	1.1	5.9	6	25	0.15	1.5	105123		Δ	▲	Δ		
L105.1813.005.1.15	0.05	1.3	1.4	1.1	5.9	9	25	0.15	1.5	105123		Δ	▲			
L105.1813.005.2.15	0.05	1.3	1.4	1.1	5.9	12	30	0.15	1.5	105123		Δ	Δ			
L105.1813.01.0.15	0.1	1.3	1.4	1.1	5.9	6	25	0.15	1.5	105123		Δ		▲	▲	
L105.1813.01.1.15	0.1	1.3	1.4	1.1	5.9	9	25	0.15	1.5	105123		Δ		▲	▲	
L105.1813.01.2.15	0.1	1.3	1.4	1.1	5.9	12	30	0.15	1.5	105123		Δ		▲	▲	

	MG12	EG35	TF45	TH35	TI25	TN35
P	o	●	●	●	●	●
M	-	●	●	●	●	●
K	-	o	●	●	●	●
N	-	-	●	●	●	●
S	-	-	●	●	●	●
H	-	-	-	-	-	-

刀片
Insert

105

Ø ≥ 1 mm

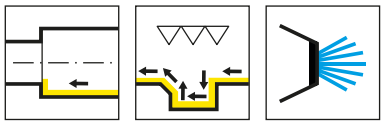

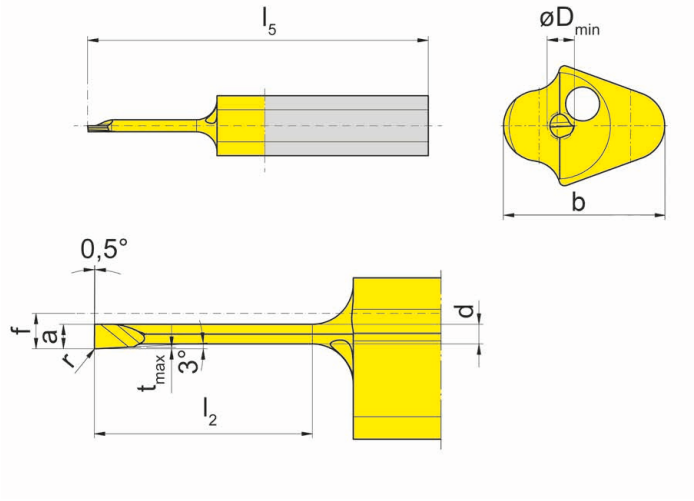

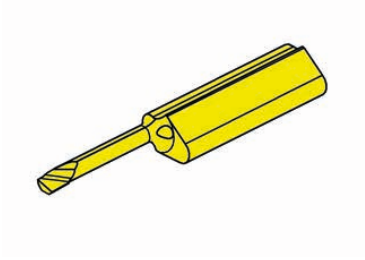

R=右手型-如图
R = right hand version shown

硬质合金牌号
Carbide grades

▲ 库存
on stock

Δ 4周
4 weeks

产品型号 Part number	r	f	a	d	b	l_2	l_5	t_{max}	D_{min}	HIS		AN25	ES15
R105.9013.000.0.1	-	1.3	0.9	0.72	5.9	4	25	0.05	1	105123		▲	▲
R105.9013.000.2.1	-	1.3	0.9	0.72	5.9	8	25	0.05	1	105123		Δ	Δ
R105.9013.003.0.1	0.03	1.3	0.9	0.72	5.9	4	25	0.05	1	105123		▲	Δ
R105.9013.003.2.1	0.03	1.3	0.9	0.72	5.9	8	25	0.05	1	105123		▲	Δ
R105.9013.000.0.15	-	1.3	1.4	1.15	5.9	6	25	0.1	1.5	105123		▲	▲
R105.9013.000.1.15	-	1.3	1.4	1.15	5.9	9	25	0.1	1.5	105123		Δ	Δ
R105.9013.003.0.15	0.03	1.3	1.4	1.15	5.9	6	25	0.1	1.5	105123		▲	▲
R105.9013.003.1.15	0.03	1.3	1.4	1.15	5.9	9	25	0.1	1.5	105123		▲	Δ
											P	●	●
											M	o	●
											K	-	o
											N	-	-
											S	-	-
											H	-	-

刀片
Insert

105

Ø ≥ 2 mm

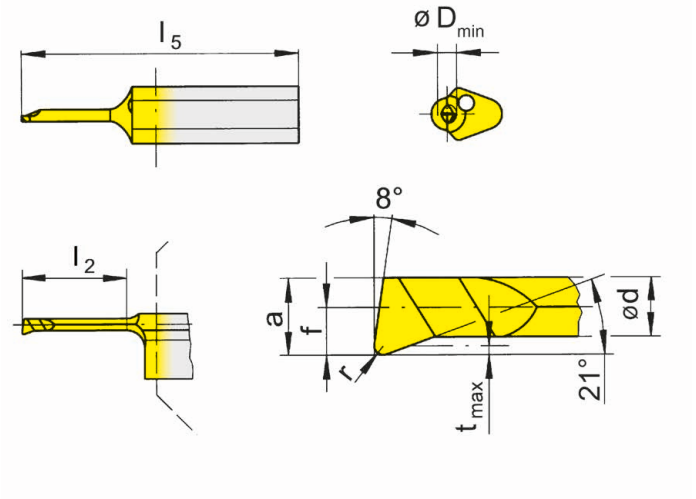

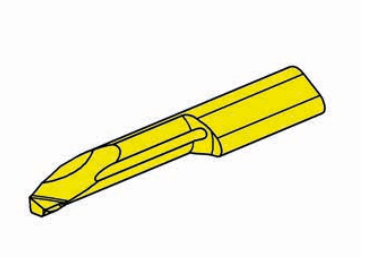

R=右手型-如图
R = right hand version shown

L=左手型
L = left hand version

硬质合金牌号
Carbide grades

▲ 库存
on stock

Δ 4周
4 weeks

产品型号 Part number	r	f	a	d	b	l_2	l_5	t_{max}	D_{min}	HIS	MG12	EG35	TF45	TH35	TI25	TN35
R105.1809.005.0.2	0.05	1	1.9	1.6	5.9	6	25	0.15	2	105123		▲	▲	Δ	Δ	Δ
R105.1809.005.1.2	0.05	1	1.9	1.6	5.9	9	25	0.15	2	105123	Δ	▲	▲			Δ
R105.1809.005.2.2	0.05	1	1.9	1.6	5.9	12	30	0.15	2	105123		▲	▲	Δ	Δ	Δ
R105.1809.01.0.2	0.1	1	1.9	1.6	5.9	6	25	0.15	2	105123		Δ		▲	▲	
R105.1809.01.1.2	0.1	1	1.9	1.6	5.9	9	25	0.15	2	105123		▲	Δ	▲	▲	
R105.1809.01.2.2	0.1	1	1.9	1.6	5.9	12	30	0.15	2	105123		Δ		▲	▲	
R105.1809.0.2	0.15	1	1.9	1.6	5.9	6	25	0.15	2	105123	▲	▲		▲	▲	▲
R105.1809.1.2	0.15	1	1.9	1.6	5.9	9	25	0.15	2	105123	▲	▲		▲	▲	▲
R105.1809.2.2	0.15	1	1.9	1.6	5.9	12	30	0.15	2	105123	▲	▲		▲	▲	▲
R105.1813.005.0.25	0.05	1.3	2.3	1.95	5.9	6	25	0.15	2.5	105123		▲	Δ	▲		
R105.1813.005.1.25	0.05	1.3	2.3	1.95	5.9	9	25	0.15	2.5	105123		▲	▲	Δ		
R105.1813.005.2.25	0.05	1.3	2.3	1.95	5.9	12	30	0.15	2.5	105123		Δ	▲	▲		
R105.1813.005.3.25	0.05	1.3	2.3	1.95	5.9	16	35	0.15	2.5	105123		▲	▲	Δ		
L105.1809.005.0.2	0.05	1	1.9	1.6	5.9	6	25	0.15	2	105123		Δ	▲	Δ		
L105.1809.005.1.2	0.05	1	1.9	1.6	5.9	9	25	0.15	2	105123		Δ	▲	Δ		
L105.1809.005.2.2	0.05	1	1.9	1.6	5.9	12	30	0.15	2	105123		Δ	▲			
L105.1809.01.0.2	0.1	1	1.9	1.6	5.9	6	25	0.15	2	105123		Δ		▲	▲	
L105.1809.01.1.2	0.1	1	1.9	1.6	5.9	9	25	0.15	2	105123		Δ		▲	Δ	
L105.1809.01.2.2	0.1	1	1.9	1.6	5.9	12	30	0.15	2	105123		Δ		▲	▲	
L105.1809.0.2	0.15	1	1.9	1.6	5.9	6	25	0.15	2	105123	Δ	▲		▲	▲	▲
L105.1809.1.2	0.15	1	1.9	1.6	5.9	9	25	0.15	2	105123	Δ	▲		▲	▲	▲
L105.1809.2.2	0.15	1	1.9	1.6	5.9	12	30	0.15	2	105123	Δ	▲		▲	▲	▲
L105.1813.005.0.25	0.05	1.3	2.3	1.95	5.9	6	25	0.15	2.5	105123		Δ		▲		
L105.1813.005.1.25	0.05	1.3	2.3	1.95	5.9	9	25	0.15	2.5	105123		Δ	▲			
L105.1813.005.2.25	0.05	1.3	2.3	1.95	5.9	12	30	0.15	2.5	105123		Δ	▲	Δ		
L105.1813.005.3.25	0.05	1.3	2.3	1.95	5.9	16	35	0.15	2.5	105123		Δ	▲	Δ		
											P	o	●	●	●	●	●
											M	-	●	●	●	●	●
											K	-	o	●	●	●	●
											N	-	-	●	●	●	●
											S	-	-	●	●	●	●
											H	-	-	-	-	-	-

刀片
Insert

105

Ø ≥ 2 mm

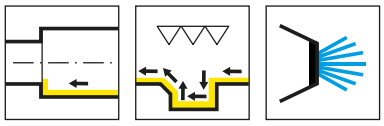

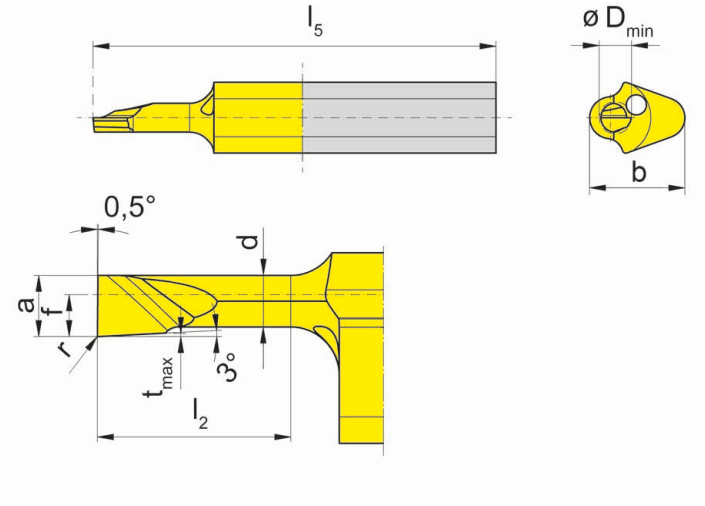

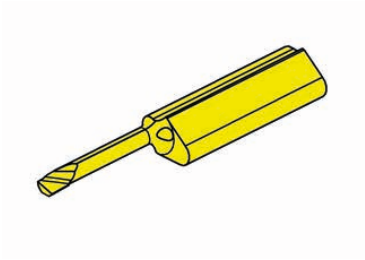

R=右手型-如图
R = right hand version shown

硬质合金牌号
Carbide grades

▲ 库存
on stock

Δ 4周
4 weeks

产品型号 Part number	r	f	a	d	b	l_2	l_5	t_{max}	D_{min}	HIS		MG12	AN25	ES15
R105.9013.000.0.2	-	1.3	1.9	1.6	5.9	6	25	0.1	2	105123			▲	▲
R105.9013.000.2.2	-	1.3	1.9	1.6	5.9	12	30	0.1	2	105123			Δ	Δ
R105.9013.003.0.2	0.03	1.3	1.9	1.6	5.9	6	25	0.1	2	105123			▲	▲
R105.9013.003.2.2	0.03	1.3	1.9	1.6	5.9	12	30	0.1	2	105123			Δ	Δ
R105.9013.000.0.25	-	1.3	2.3	2	5.9	6	25	0.1	2.5	105123			Δ	Δ
R105.9013.000.2.25	-	1.3	2.3	2	5.9	12	30	0.1	2.5	105123		Δ	Δ	Δ
R105.9013.000.3.25	-	1.3	2.3	2	5.9	16	35	0.1	2.5	105123			Δ	Δ
R105.9013.003.0.25	0.03	1.3	2.3	2	5.9	6	25	0.1	2.5	105123			▲	▲
R105.9013.003.2.25	0.03	1.3	2.3	2	5.9	12	30	0.1	2.5	105123		Δ	Δ	Δ
R105.9013.003.3.25	0.03	1.3	2.3	2	5.9	16	35	0.1	2.5	105123			Δ	Δ
											P	o	●	●
											M	-	o	●
											K	-	-	o
											N	-	-	-
											S	-	-	-
											H	-	-	-

刀片
Insert

105

Ø ≥ 3 mm

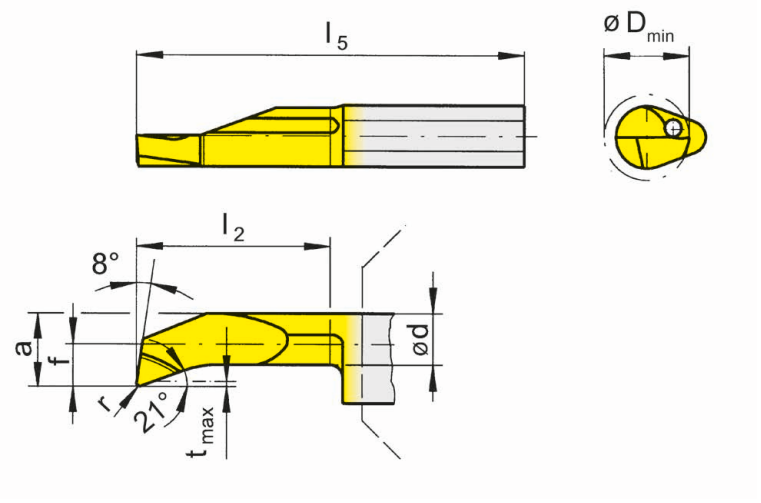

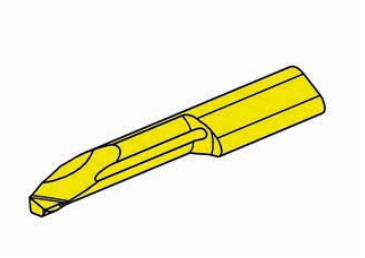

R=右手型-如图
R = right hand version shown

L=左手型
L = left hand version

硬质合金牌号
Carbide grades

▲ 库存
on stock

Δ 4周
4 weeks

产品型号 Part number	r	f	a	d	b	l_2	l_5	t_{max}	D_{min}	HIS	MG12	EG35	TF45	TH35	TI25	TN35
R105.1813.005.1.3	0.05	1.3	2.6	2.3	5.9	10	25	0.15	3	105123		▲	▲	Δ	Δ	Δ
R105.1813.005.2.3	0.05	1.3	2.6	2.3	5.9	15	30	0.15	3	105123		Δ	▲			Δ
R105.1813.005.3.3	0.05	1.3	2.6	2.3	5.9	20	35	0.15	3	105123		▲	▲		Δ	
R105.1813.01.1.3	0.1	1.3	2.6	2.3	5.9	10	25	0.15	3	105123		▲		▲	▲	
R105.1813.01.2.3	0.1	1.3	2.6	2.3	5.9	15	30	0.15	3	105123		▲		▲	▲	
R105.1813.01.3.3	0.1	1.3	2.6	2.3	5.9	20	35	0.15	3	105123		▲		▲	▲	
R105.1813.1.3	0.2	1.3	2.6	2.3	5.9	10	25	0.15	3	105123	▲	▲	Δ	▲	▲	▲
R105.1813.2.3	0.2	1.3	2.6	2.3	5.9	15	30	0.15	3	105123	▲	▲	Δ	▲	▲	▲
R105.1813.3.3	0.2	1.3	2.6	2.3	5.9	20	35	0.15	3	105123	▲	▲		▲	▲	▲
L105.1813.005.1.3	0.05	1.3	2.6	2.3	5.9	10	25	0.15	3	105123		Δ	▲			
L105.1813.005.2.3	0.05	1.3	2.6	2.3	5.9	15	30	0.15	3	105123		Δ	▲			
L105.1813.005.3.3	0.05	1.3	2.6	2.3	5.9	20	35	0.15	3	105123		Δ	▲			
L105.1813.01.1.3	0.1	1.3	2.6	2.3	5.9	10	25	0.15	3	105123		Δ		▲	▲	
L105.1813.01.2.3	0.1	1.3	2.6	2.3	5.9	15	30	0.15	3	105123		Δ		▲	▲	
L105.1813.01.3.3	0.1	1.3	2.6	2.3	5.9	20	35	0.15	3	105123		Δ		▲	▲	
L105.1813.1.3	0.2	1.3	2.6	2.3	5.9	10	25	0.15	3	105123	▲	▲		▲	▲	▲
L105.1813.2.3	0.2	1.3	2.6	2.3	5.9	15	30	0.15	3	105123	▲	▲		▲	▲	▲
L105.1813.3.3	0.2	1.3	2.6	2.3	5.9	20	35	0.15	3	105123	Δ	▲		▲	▲	▲
P											o	●	●	●	●	●
M											-	●	●	●	●	●
K											-	o	●	●	●	●
N											-	-	●	●	●	●
S											-	-	●	●	●	●
H											-	-	-	-	-	-

刀片
Insert

105

Ø ≥ 4 mm

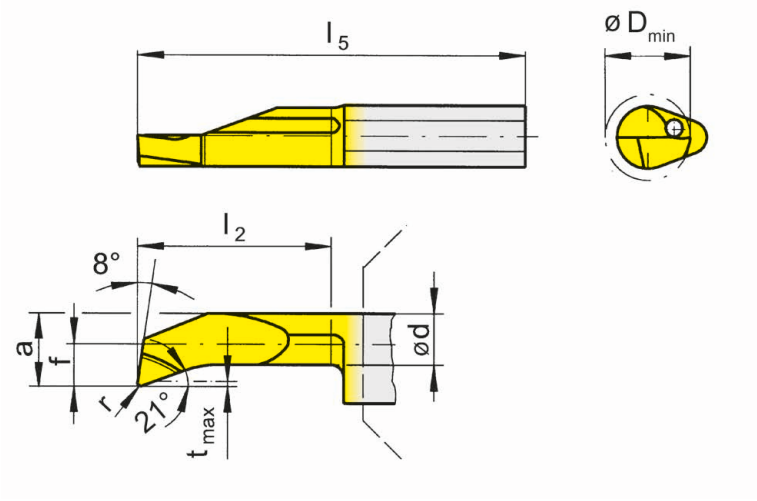

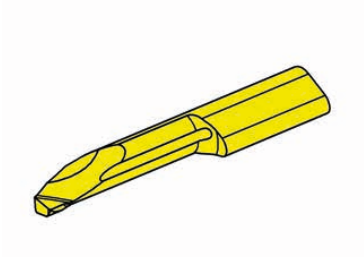

R=右手型-如图
R = right hand version shown

L=左手型
L = left hand version

硬质合金牌号
Carbide grades

▲ 库存
on stock

Δ 4周
4 weeks

产品型号 Part number	r	f	a	d	b	l_2	l_5	t_{max}	D_{min}	HIS	MG12	EG35	TF45	TH35	TI25	TN35
R105.1819.005.1.4	0.05	1.9	3.7	2.9	6.4	10	25	0.3	4	105124		▲	▲	Δ	Δ	
R105.1819.005.2.4	0.05	1.9	3.7	2.9	6.4	15	30	0.3	4	105124		▲	▲			
R105.1819.005.3.4	0.05	1.9	3.7	2.9	6.4	20	35	0.3	4	105124		▲	▲	Δ		
R105.1819.1.4	0.2	1.9	3.7	2.9	6.4	10	25	0.3	4	105124	▲	▲		▲	▲	▲
R105.1819.2.4	0.2	1.9	3.7	2.9	6.4	15	30	0.3	4	105124	▲	▲	Δ	▲	▲	▲
R105.1819.3.4	0.2	1.9	3.7	2.9	6.4	20	35	0.3	4	105124	▲	▲	Δ	▲	▲	▲
L105.1819.005.1.4	0.05	1.9	3.7	2.9	6.4	10	25	0.3	4	105124		Δ	▲	Δ		
L105.1819.005.2.4	0.05	1.9	3.7	2.9	6.4	15	30	0.3	4	105124		Δ	▲			
L105.1819.005.3.4	0.05	1.9	3.7	2.9	6.4	20	35	0.3	4	105124		Δ	▲	Δ		
L105.1819.1.4	0.2	1.9	3.7	2.9	6.4	10	25	0.3	4	105124	▲	▲		▲	▲	▲
L105.1819.2.4	0.2	1.9	3.7	2.9	6.4	15	30	0.3	4	105124	▲	▲		▲	▲	▲
L105.1819.3.4	0.2	1.9	3.7	2.9	6.4	20	35	0.3	4	105124	▲	▲		▲	▲	▲
P											o	●	●	●	●	●
M											-	●	●	●	●	●
K											-	o	●	●	●	●
N											-	-	●	●	●	●
S											-	-	●	●	●	●
H											-	-	-	-	-	-

刀片
Insert

105

Ø ≥ 3 mm

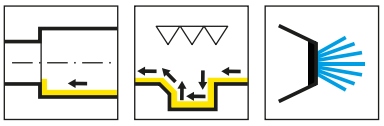

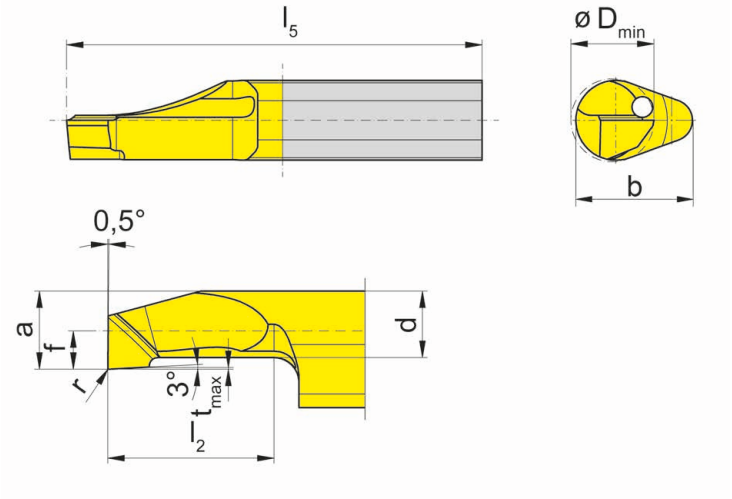

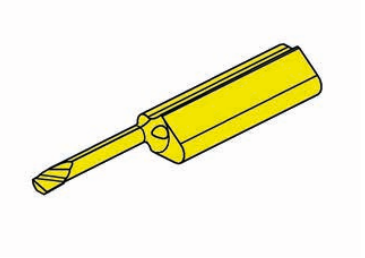

R=右手型-如图
R = right hand version shown

硬质合金牌号
Carbide grades

▲ 库存
on stock

Δ 4周
4 weeks

产品型号 Part number	r	f	a	d	b	l_2	l_5	t_{max}	D_{min}	HIS		AN25	ES15
R105.9013.000.1.3	-	1.3	2.6	2.3	5.9	10	25	0.1	3	105123		▲	▲
R105.9013.000.3.3	-	1.3	2.6	2.3	5.9	20	35	0.1	3	105123		Δ	Δ
R105.9013.003.1.3	0.03	1.3	2.6	2.3	5.9	10	25	0.1	3	105123		▲	▲
R105.9013.003.3.3	0.03	1.3	2.6	2.3	5.9	20	35	0.1	3	105123		Δ	▲
R105.9019.000.1.4	-	1.9	3.7	3.2	6.4	10	25	0.1	4	105124		▲	Δ
R105.9019.000.3.4	-	1.9	3.7	3.2	6.4	20	35	0.1	4	105124		Δ	Δ
R105.9019.003.1.4	0.03	1.9	3.7	3.2	6.4	10	25	0.1	4	105124		▲	Δ
R105.9019.003.3.4	0.03	1.9	3.7	3.2	6.4	20	35	0.1	4	105124		▲	Δ
											P	●	●
											M	o	●
											K	-	o
											N	-	-
											S	-	-
											H	-	-

刀片
Insert

105

Ø ≥ 5 mm

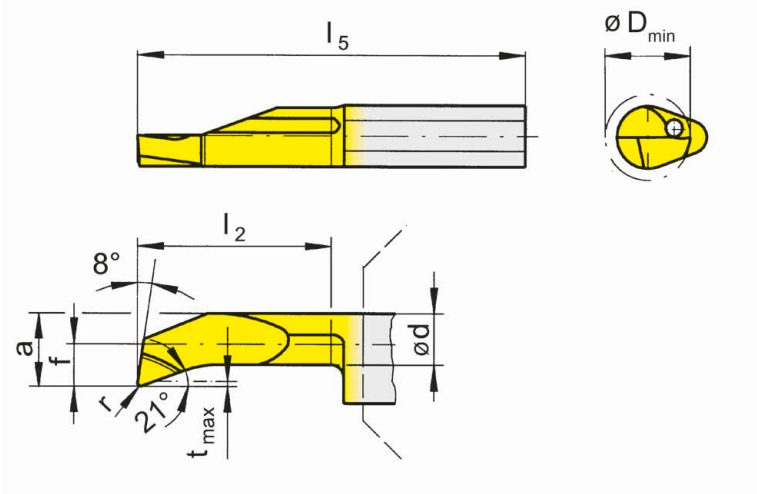

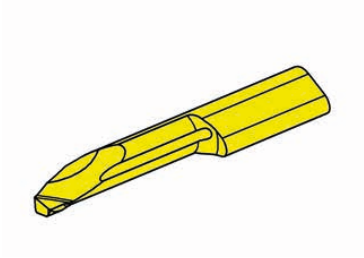

R=右手型-如图
R = right hand version shown

L=左手型
L = left hand version

硬质合金牌号
Carbide grades

▲ 库存
on stock

Δ 4周
4 weeks

产品型号 Part number	r	f	a	d	b	l_2	l_5	t_{max}	D_{min}	HIS	MG12	EG35	TF45	TH35	TI25	TN35
R105.1823.005.1.5	0.05	2.3	4.7	4	7	10	25	0.5	5	105125	Δ	▲	▲	Δ		
R105.1823.005.2.5	0.05	2.3	4.7	4	7	15	30	0.5	5	105125		▲	▲	Δ		Δ
R105.1823.005.3.5	0.05	2.3	4.7	4	7	20	35	0.5	5	105125		▲	▲	Δ		Δ
R105.1823.005.4.5	0.05	2.3	4.7	4	7	25	40	0.5	5	105125		▲	▲			Δ
R105.1823.005.5.5	0.05	2.3	4.7	4	7	30	45	0.5	5	105125		Δ	▲	Δ		
R105.1823.1.5	0.2	2.3	4.7	4	7	10	25	0.5	5	105125	▲	▲	Δ	▲	▲	▲
R105.1823.2.5	0.2	2.3	4.7	4	7	15	30	0.5	5	105125	▲	▲		▲	▲	▲
R105.1823.3.5	0.2	2.3	4.7	4	7	20	35	0.5	5	105125	▲	▲	Δ	▲	▲	▲
R105.1823.4.5	0.2	2.3	4.7	4	7	25	40	0.5	5	105125	▲	▲		▲	▲	▲
R105.1823.5.5	0.2	2.3	4.7	4	7	30	45	0.5	5	105125	▲	▲		▲	▲	▲
L105.1823.005.1.5	0.05	2.3	4.7	4	7	10	25	0.5	5	105125		Δ	▲		Δ	
L105.1823.005.2.5	0.05	2.3	4.7	4	7	15	30	0.5	5	105125		Δ	▲			
L105.1823.005.3.5	0.05	2.3	4.7	4	7	20	35	0.5	5	105125		Δ	▲			
L105.1823.005.4.5	0.05	2.3	4.7	4	7	25	40	0.5	5	105125		▲	▲			
L105.1823.005.5.5	0.05	2.3	4.7	4	7	30	45	0.5	5	105125		Δ	▲			
L105.1823.1.5	0.2	2.3	4.7	4	7	10	25	0.5	5	105125	▲	▲		▲	▲	▲
L105.1823.2.5	0.2	2.3	4.7	4	7	15	30	0.5	5	105125	▲	▲		▲	▲	▲
L105.1823.3.5	0.2	2.3	4.7	4	7	20	35	0.5	5	105125	▲	▲		▲	▲	▲
L105.1823.4.5	0.2	2.3	4.7	4	7	25	40	0.5	5	105125	▲	▲		▲	▲	▲
L105.1823.5.5	0.2	2.3	4.7	4	7	30	45	0.5	5	105125	▲	▲		▲	▲	▲

	MG12	EG35	TF45	TH35	TI25	TN35
P	o	●	●	●	●	●
M	-	●	●	●	●	●
K	-	o	●	●	●	●
N	-	-	●	●	●	●
S	-	-	●	●	●	●
H	-	-	-	-	-	-

刀片
Insert

105

Ø ≥ 5 mm

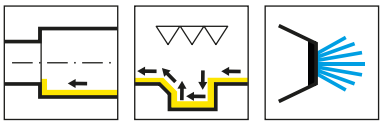

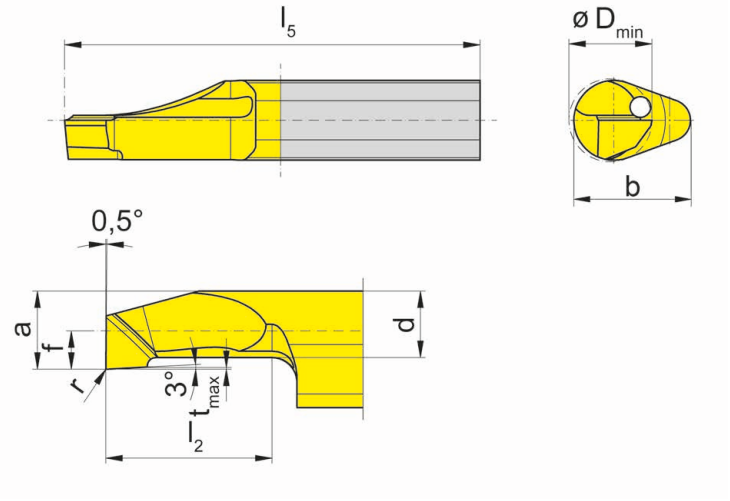

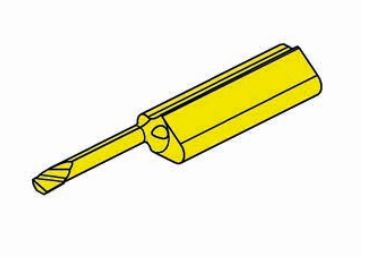

R=右手型-如图
R = right hand version shown

硬质合金牌号
Carbide grades

▲ 库存
on stock

Δ 4周
4 weeks

产品型号 Part number	r	f	a	d	b	l_2	l_5	t_{max}	D_{min}	HIS		AN25	ES15
R105.9023.000.1.5	-	2.3	4.7	4	7	10	25	0.1	5	105125		▲	Δ
R105.9023.000.3.5	-	2.3	4.7	4	7	20	35	0.1	5	105125		Δ	Δ
R105.9023.000.5.5	-	2.3	4.7	4	7	30	45	0.1	5	105125		Δ	Δ
R105.9023.003.1.5	0.03	2.3	4.7	4	7	10	25	0.1	5	105125		▲	Δ
R105.9023.003.3.5	0.03	2.3	4.7	4	7	20	35	0.1	5	105125		Δ	Δ
R105.9023.003.5.5	0.03	2.3	4.7	4	7	30	45	0.1	5	105125		Δ	Δ
											P	●	●
											M	o	●
											K	-	o
											N	-	-
											S	-	-
											H	-	-

刀片
Insert

105 Ø ≥ 6 mm

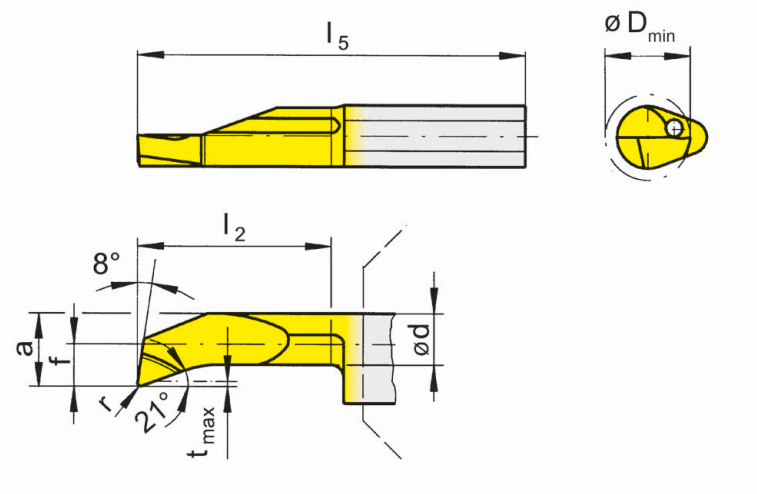

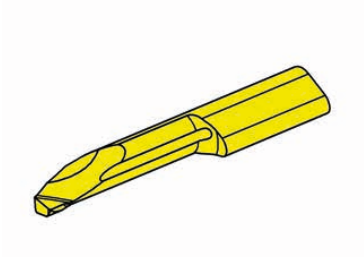

R=右手型-如图
R = right hand version shown

L=左手型
L = left hand version

硬质合金牌号
Carbide grades

▲ 库存
on stock

Δ 4周
4 weeks

产品型号 Part number	r	f	a	d	b	l_2	l_5	t_{max}	D_{min}	HIS	MG12	EG35	TF45	TH35	TI25	TN35
R105.1833.005.2.6	0.05	3.3	5.7	4.7	7	15	30	0.5	6	105125		▲	▲			
R105.1833.005.3.6	0.05	3.3	5.7	4.7	7	20	35	0.5	6	105125		Δ	▲			
R105.1833.005.4.6	0.05	3.3	5.7	4.7	7	25	40	0.5	6	105125		Δ	▲			
R105.1833.005.5.6	0.05	3.3	5.7	4.7	7	30	45	0.5	6	105125		Δ	▲			Δ
R105.1833.2.6	0.2	3.3	5.7	4.7	7	15	30	0.5	6	105125	▲	▲		▲	▲	▲
R105.1833.3.6	0.2	3.3	5.7	4.7	7	20	35	0.5	6	105125	▲	▲	Δ	▲	▲	▲
R105.1833.4.6	0.2	3.3	5.7	4.7	7	25	40	0.5	6	105125	▲	▲		▲	▲	▲
R105.1833.5.6	0.2	3.3	5.7	4.7	7	30	45	0.5	6	105125	▲	▲		▲	▲	▲
R105.1840.005.3.7	0.05	4	6.4	5.2	7	20	35	0.5	6.8	105125		Δ	▲			
R105.1840.005.4.7	0.05	4	6.4	5.2	7	25	40	0.5	6.8	105125		Δ	▲			
R105.1840.005.5.7	0.05	4	6.4	5.2	7	30	45	0.5	6.8	105125		Δ	▲			
R105.1840.3.7	0.2	4	6.4	5.2	7	20	35	0.5	6.8	105125	▲	▲	Δ	▲	▲	▲
R105.1840.4.7	0.2	4	6.4	5.2	7	25	40	0.5	6.8	105125	▲	▲	Δ	▲	▲	▲
R105.1840.5.7	0.2	4	6.4	5.2	7	30	45	0.5	6.8	105125	▲	▲		▲	▲	▲
L105.1833.005.2.6	0.05	3.3	5.7	4.7	7	15	30	0.5	6	105125		Δ	▲	Δ		
L105.1833.005.3.6	0.05	3.3	5.7	4.7	7	20	35	0.5	6	105125		Δ	▲			
L105.1833.005.4.6	0.05	3.3	5.7	4.7	7	25	40	0.5	6	105125		Δ	Δ			
L105.1833.005.5.6	0.05	3.3	5.7	4.7	7	30	45	0.5	6	105125		Δ	Δ			
L105.1833.2.6	0.2	3.3	5.7	4.7	7	15	30	0.5	6	105125	▲	▲		▲	▲	▲
L105.1833.3.6	0.2	3.3	5.7	4.7	7	20	35	0.5	6	105125	▲	▲		▲	▲	▲
L105.1833.4.6	0.2	3.3	5.7	4.7	7	25	40	0.5	6	105125	▲	▲		▲	▲	▲
L105.1833.5.6	0.2	3.3	5.7	4.7	7	30	45	0.5	6	105125	▲	▲		▲	▲	▲
L105.1840.005.3.7	0.05	4	6.4	5.2	7	20	35	0.5	6.8	105125		Δ	▲			
L105.1840.005.4.7	0.05	4	6.4	5.2	7	25	40	0.5	6.8	105125		Δ	▲			
L105.1840.005.5.7	0.05	4	6.4	5.2	7	30	45	0.5	6.8	105125		Δ	▲			
L105.1840.3.7	0.2	4	6.4	5.2	7	20	35	0.5	6.8	105125	▲	▲		▲	▲	▲
L105.1840.4.7	0.2	4	6.4	5.2	7	25	40	0.5	6.8	105125	▲	▲		▲	▲	▲
L105.1840.5.7	0.2	4	6.4	5.2	7	30	45	0.5	6.8	105125	▲	▲		▲	▲	▲
P											o	●	●	●	●	●
M											-	●	●	●	●	●
K											-	o	●	●	●	●
N											-	-	●	●	●	●
S											-	-	●	●	●	●
H											-	-	-	-	-	-

刀片
Insert

105

Ø ≥ 4 mm

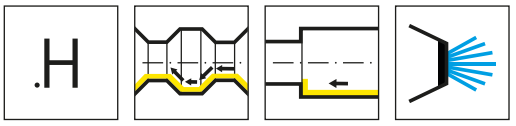

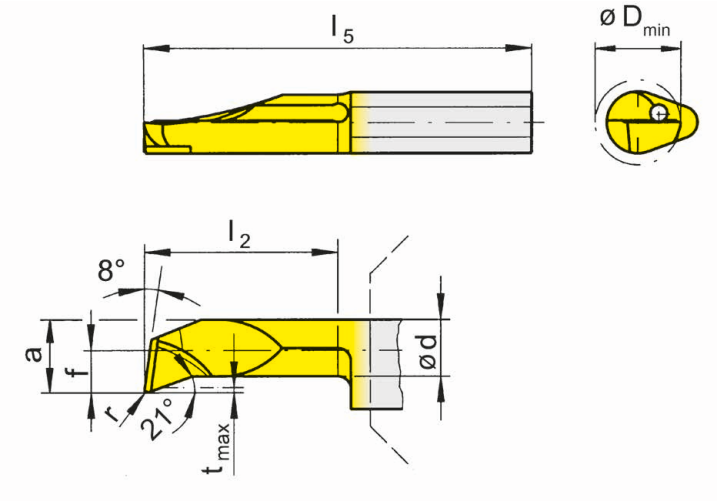

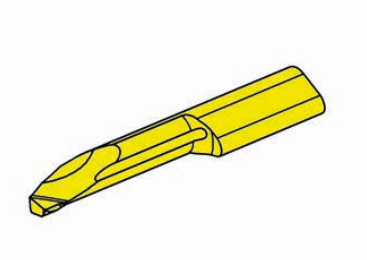

R=右手型-如图
R = right hand version shown

L=左手型
L = left hand version

▲ 库存
on stock

硬质合金牌号
Carbide grades

Δ 4周
4 weeks

产品型号 Part number	r	f	a	d	b	l_2	l_5	t_{max}	D_{min}	HIS		EG35	TF45	TH35
R105.1819.1.H.4	0.2	1.9	3.7	2.9	7	10	25	0.3	4	105125		Δ	▲	▲
R105.1819.2.H.4	0.2	1.9	3.7	2.9	7	15	30	0.3	4	105125		▲	▲	▲
R105.1819.3.H.4	0.2	1.9	3.7	2.9	7	20	35	0.3	4	105125		Δ	▲	▲
R105.1823.1.H.5	0.2	2.3	4.7	4	7	10	25	0.5	5	105125		▲	▲	▲
R105.1823.2.H.5	0.2	2.3	4.7	4	7	15	30	0.5	5	105125		▲	▲	▲
R105.1823.3.H.5	0.2	2.3	4.7	4	7	20	35	0.5	5	105125		▲	▲	▲
R105.1823.4.H.5	0.2	2.3	4.7	4	7	25	40	0.5	5	105125		▲	▲	▲
R105.1823.5.H.5	0.2	2.3	4.7	4	7	30	45	0.5	5	105125		Δ	▲	▲
L105.1819.1.H.4	0.2	1.9	3.7	2.9	7	10	25	0.3	4	105125		Δ	▲	Δ
L105.1819.2.H.4	0.2	1.9	3.7	2.9	7	15	30	0.3	4	105125		Δ	Δ	Δ
L105.1819.3.H.4	0.2	1.9	3.7	2.9	7	20	35	0.3	4	105125		Δ	▲	▲
L105.1823.1.H.5	0.2	2.3	4.7	4	7	10	25	0.5	5	105125		Δ	▲	▲
L105.1823.2.H.5	0.2	2.3	4.7	4	7	15	30	0.5	5	105125		Δ	Δ	Δ
L105.1823.3.H.5	0.2	2.3	4.7	4	7	20	35	0.5	5	105125		Δ	Δ	▲
L105.1823.4.H.5	0.2	2.3	4.7	4	7	25	40	0.5	5	105125		Δ	Δ	Δ
L105.1823.5.H.5	0.2	2.3	4.7	4	7	30	45	0.5	5	105125		Δ	Δ	Δ
											P	●	●	●
											M	●	●	●
											K	o	●	●
											N	-	●	●
											S	-	●	●
											H	-	-	-

刀片
Insert

105

Ø ≥ 6 mm

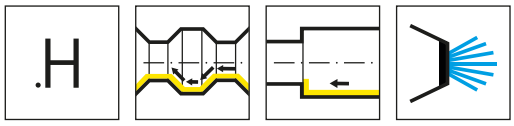

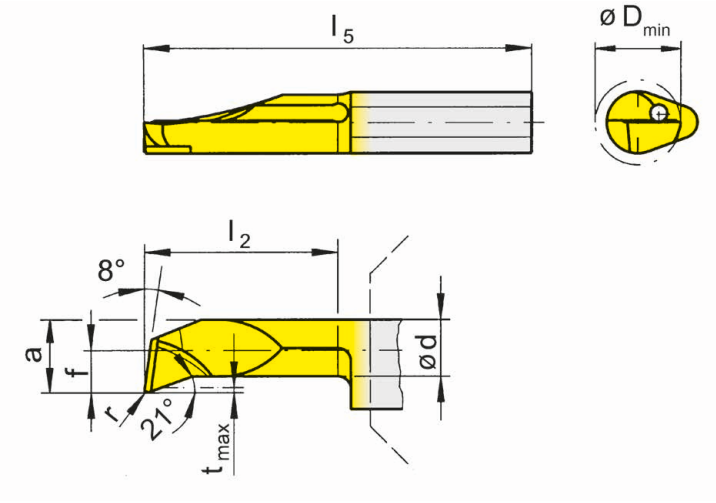

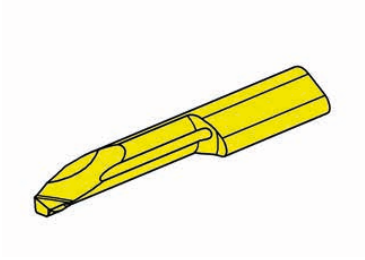

R=右手型-如图
R = right hand version shown

L=左手型
L = left hand version

▲ 库存
on stock

硬质合金牌号
Carbide grades

Δ 4周
4 weeks

产品型号 Part number	r	f	a	d	b	l_2	l_5	t_{max}	D_{min}	HIS	EG35	TF45	TH35
R105.1833.2.H.6	0.2	3.3	5.7	4.7	7	15	30	0.5	6	105125	Δ	▲	▲
R105.1833.3.H.6	0.2	3.3	5.7	4.7	7	20	35	0.5	6	105125	Δ	▲	▲
R105.1833.4.H.6	0.2	3.3	5.7	4.7	7	25	40	0.5	6	105125	Δ	▲	▲
R105.1833.5.H.6	0.2	3.3	5.7	4.7	7	30	45	0.5	6	105125	Δ	▲	▲
R105.1840.3.H.7	0.2	4	6.4	5.2	7	20	35	0.5	7	105125	▲	▲	▲
R105.1840.4.H.7	0.2	4	6.4	5.2	7	25	40	0.5	7	105125	Δ	▲	▲
R105.1840.5.H.7	0.2	4	6.4	5.2	7	30	45	0.5	7	105125	Δ	▲	▲
L105.1833.2.H.6	0.2	3.3	5.7	4.7	7	15	30	0.5	6	105125	Δ	Δ	Δ
L105.1833.3.H.6	0.2	3.3	5.7	4.7	7	20	35	0.5	6	105125	Δ	Δ	Δ
L105.1833.4.H.6	0.2	3.3	5.7	4.7	7	25	40	0.5	6	105125	Δ	Δ	Δ
L105.1833.5.H.6	0.2	3.3	5.7	4.7	7	30	45	0.5	6	105125	Δ	Δ	Δ
L105.1840.3.H.7	0.2	4	6.4	5.2	7	20	35	0.5	7	105125	Δ	▲	Δ
L105.1840.4.H.7	0.2	4	6.4	5.2	7	25	40	0.5	7	105125	Δ	Δ	Δ
L105.1840.5.H.7	0.2	4	6.4	5.2	7	30	45	0.5	7	105125	Δ	▲	Δ

	EG35	TF45	TH35
P	●	●	●
M	●	●	●
K	o	●	●
N	-	●	●
S	-	●	●
H	-	-	-

刀片
Insert

105

Ø ≥ 4 mm

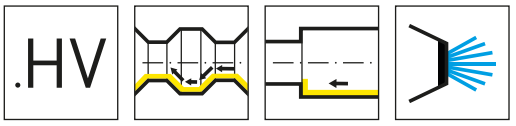

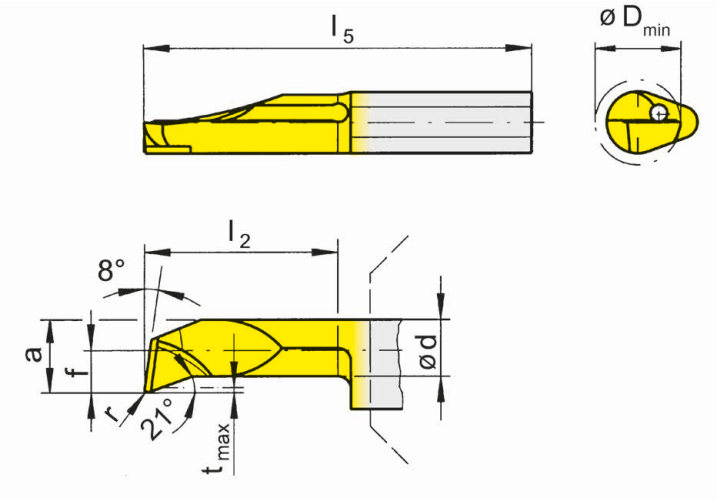

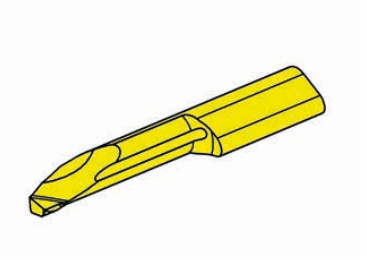

R=右手型-如图
R = right hand version shown

L=左手型
L = left hand version

硬质合金牌号
Carbide grades

▲ 库存
on stock

Δ 4周
4 weeks

产品型号 Part number	r	f	a	d	b	l_2	l_5	t_{max}	D_{min}	HIS		EG35	TH35
R105.1819.1.HV4	0.2	1.9	3.7	2.9	7	10	25	0.3	4	105125		Δ	▲
R105.1819.2.HV4	0.2	1.9	3.7	2.9	7	15	30	0.3	4	105125		Δ	▲
R105.1819.3.HV4	0.2	1.9	3.7	2.9	7	20	35	0.3	4	105125		Δ	▲
R105.1823.1.HV5	0.2	2.3	4.7	4	7	10	25	0.5	5	105125		Δ	▲
R105.1823.2.HV5	0.2	2.3	4.7	4	7	15	30	0.5	5	105125		▲	▲
R105.1823.3.HV5	0.2	2.3	4.7	4	7	20	35	0.5	5	105125		▲	▲
R105.1823.4.HV5	0.2	2.3	4.7	4	7	25	40	0.5	5	105125		Δ	▲
R105.1823.5.HV5	0.2	2.3	4.7	4	7	30	45	0.5	5	105125		▲	▲
L105.1819.1.HV4	0.2	1.9	3.7	2.9	7	10	25	0.3	4	105125		Δ	Δ
L105.1819.2.HV4	0.2	1.9	3.7	2.9	7	15	30	0.3	4	105125		Δ	▲
L105.1819.3.HV4	0.2	1.9	3.7	2.9	7	20	35	0.3	4	105125		Δ	▲
L105.1823.1.HV5	0.2	2.3	4.7	4	7	10	25	0.5	5	105125		Δ	▲
L105.1823.2.HV5	0.2	2.3	4.7	4	7	15	30	0.5	5	105125		Δ	▲
L105.1823.3.HV5	0.2	2.3	4.7	4	7	20	35	0.5	5	105125		Δ	▲
L105.1823.4.HV5	0.2	2.3	4.7	4	7	25	40	0.5	5	105125		Δ	Δ
L105.1823.5.HV5	0.2	2.3	4.7	4	7	30	45	0.5	5	105125			Δ
											P	●	●
											M	●	●
											K	o	●
											N	-	●
											S	-	●
											H	-	-

刀片
Insert

105 Ø ≥ 6 mm

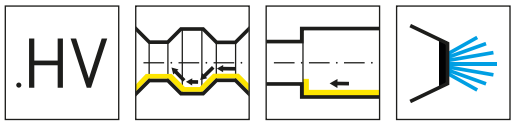

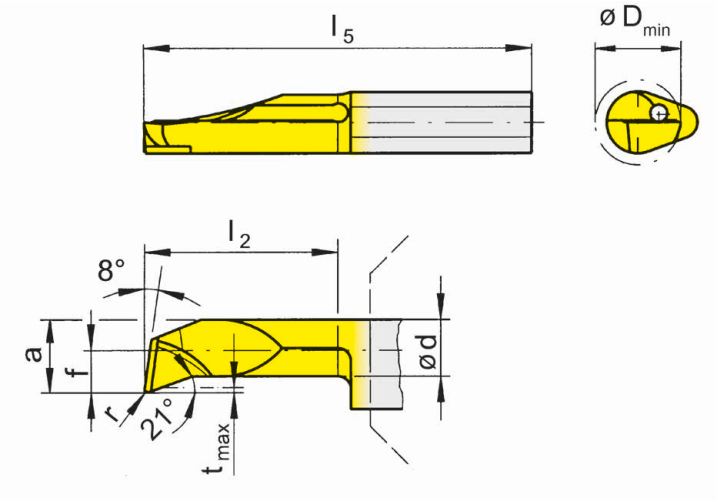

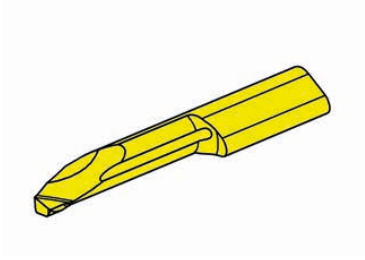

R=右手型-如图
R = right hand version shown

L=左手型
L = left hand version

▲ 库存
on stock

Δ 4周
4 weeks

硬质合金牌号
Carbide grades

产品型号 Part number	r	f	a	d	b	l_2	l_5	t_{max}	D_{min}	HIS		EG35	TH35
R105.1833.2.HV6	0.2	3.3	5.7	4.7	7	15	30	0.5	6	105125		Δ	▲
R105.1833.3.HV6	0.2	3.3	5.7	4.7	7	20	35	0.5	6	105125		▲	▲
R105.1833.4.HV6	0.2	3.3	5.7	4.7	7	25	40	0.5	6	105125		Δ	▲
R105.1833.5.HV6	0.2	3.3	5.7	4.7	7	30	45	0.5	6	105125		Δ	▲
R105.1840.2.HV7	0.2	4	6.4	5.2	7	15	30	0.5	7	105125		Δ	▲
R105.1840.3.HV7	0.2	4	6.4	5.2	7	20	35	0.5	7	105125		Δ	▲
R105.1840.4.HV7	0.2	4	6.4	5.2	7	25	40	0.5	7	105125		▲	▲
R105.1840.5.HV7	0.2	4	6.4	5.2	7	30	45	0.5	7	105125		Δ	▲
L105.1833.2.HV6	0.2	3.3	5.7	4.7	7	15	30	0.5	6	105125		Δ	▲
L105.1833.3.HV6	0.2	3.3	5.7	4.7	7	20	35	0.5	6	105125		Δ	Δ
L105.1833.4.HV6	0.2	3.3	5.7	4.7	7	25	40	0.5	6	105125		▲	▲
L105.1833.5.HV6	0.2	3.3	5.7	4.7	7	30	45	0.5	6	105125		Δ	Δ
L105.1840.2.HV7	0.2	4	6.4	5.2	7	15	30	0.5	7	105125		Δ	▲
L105.1840.3.HV7	0.2	4	6.4	5.2	7	20	35	0.5	7	105125			Δ
L105.1840.4.HV7	0.2	4	6.4	5.2	7	25	40	0.5	7	105125		Δ	Δ
L105.1840.5.HV7	0.2	4	6.4	5.2	7	30	45	0.5	7	105125		Δ	Δ
											P	●	●
											M	●	●
											K	o	●
											N	-	●
											S	-	●
											H	-	-

刀片
Insert

105

Ø ≥ 4 mm

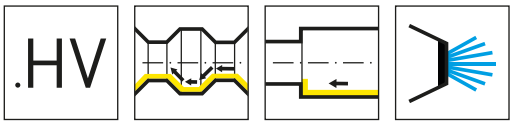

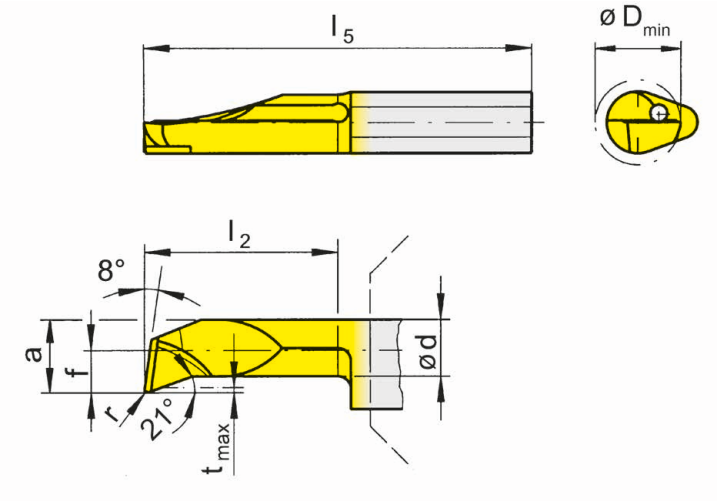

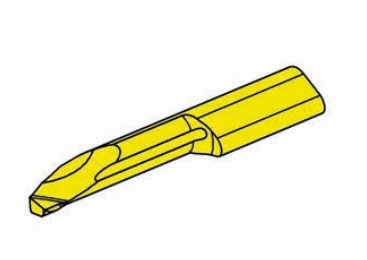

R=右手型-如图
R = right hand version shown

L=左手型
L = left hand version

硬质合金牌号
Carbide grades

▲ 库存
on stock

Δ 4周
4 weeks

产品型号 Part number	r	f	a	d	b	l_2	l_5	t_{max}	D_{min}	HIS	EG35	TH35
R105.1819.04.1.HV4	0.4	1.9	3.7	2.9	7	10	25	0.3	4	105125	▲	▲
R105.1819.04.2.HV4	0.4	1.9	3.7	2.9	7	15	30	0.3	4	105125	▲	▲
R105.1819.04.3.HV4	0.4	1.9	3.7	2.9	7	20	35	0.3	4	105125	Δ	▲
R105.1823.04.1.HV5	0.4	2.3	4.7	4	7	10	25	0.5	5	105125	Δ	▲
R105.1823.04.2.HV5	0.4	2.3	4.7	4	7	15	30	0.5	5	105125	▲	▲
R105.1823.04.3.HV5	0.4	2.3	4.7	4	7	20	35	0.5	5	105125	Δ	▲
R105.1823.04.4.HV5	0.4	2.3	4.7	4	7	25	40	0.5	5	105125	Δ	▲
R105.1823.04.5.HV5	0.4	2.3	4.7	4	7	30	45	0.5	5	105125	Δ	▲
L105.1819.04.1.HV4	0.4	1.9	3.7	2.9	7	10	25	0.3	4	105125	Δ	▲
L105.1819.04.2.HV4	0.4	1.9	3.7	2.9	7	15	30	0.3	4	105125	Δ	Δ
L105.1819.04.3.HV4	0.4	1.9	3.7	2.9	7	20	35	0.3	4	105125	Δ	Δ
L105.1823.04.1.HV5	0.4	2.3	4.7	4	7	10	25	0.5	5	105125	Δ	▲
L105.1823.04.2.HV5	0.4	2.3	4.7	4	7	15	30	0.5	5	105125	Δ	Δ
L105.1823.04.3.HV5	0.4	2.3	4.7	4	7	20	35	0.5	5	105125	Δ	Δ
L105.1823.04.4.HV5	0.4	2.3	4.7	4	7	25	40	0.5	5	105125	Δ	Δ
L105.1823.04.5.HV5	0.4	2.3	4.7	4	7	30	45	0.5	5	105125	Δ	▲

	EG35	TH35
P	●	●
M	●	●
K	o	●
N	-	●
S	-	●
H	-	-

刀片
Insert

105

Ø ≥ 6 mm

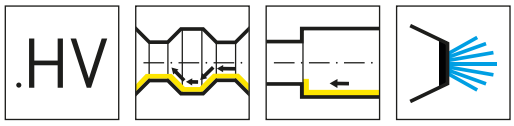

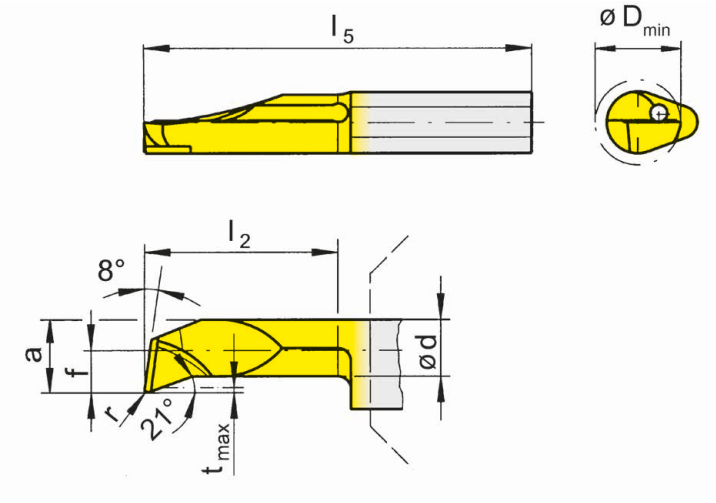

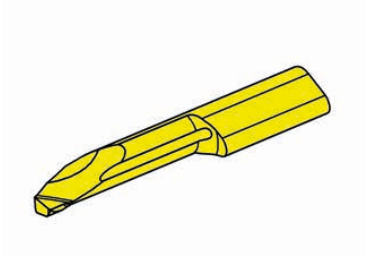

R=右手型-如图
R = right hand version shown

L=左手型
L = left hand version

硬质合金牌号
Carbide grades

▲ 库存
on stock

Δ 4周
4 weeks

产品型号 Part number	r	f	a	d	b	l_2	l_5	t_{max}	D_{min}	HIS	EG35	TH35
R105.1833.04.2.HV6	0.4	3.3	5.7	4.7	7	15	30	0.5	6	105125	Δ	▲
R105.1833.04.3.HV6	0.4	3.3	5.7	4.7	7	20	35	0.5	6	105125	▲	▲
R105.1833.04.4.HV6	0.4	3.3	5.7	4.7	7	25	40	0.5	6	105125	Δ	▲
R105.1833.04.5.HV6	0.4	3.3	5.7	4.7	7	30	45	0.5	6	105125	Δ	▲
R105.1840.04.2.HV7	0.4	4	6.4	5.2	7	15	30	0.5	7	105125	Δ	▲
R105.1840.04.3.HV7	0.4	4	6.4	5.2	7	20	35	0.5	7	105125	Δ	▲
R105.1840.04.4.HV7	0.4	4	6.4	5.2	7	25	40	0.5	7	105125	Δ	▲
R105.1840.04.5.HV7	0.4	4	6.4	5.2	7	30	45	0.5	7	105125	Δ	▲
L105.1833.04.2.HV6	0.4	3.3	5.7	4.7	7	15	30	0.5	6	105125		▲
L105.1833.04.3.HV6	0.4	3.3	5.7	4.7	7	20	35	0.5	6	105125	Δ	Δ
L105.1833.04.4.HV6	0.4	3.3	5.7	4.7	7	25	40	0.5	6	105125	Δ	Δ
L105.1833.04.5.HV6	0.4	3.3	5.7	4.7	7	30	45	0.5	6	105125	Δ	Δ
L105.1840.04.2.HV7	0.4	4	6.4	5.2	7	15	30	0.5	7	105125	Δ	▲
L105.1840.04.3.HV7	0.4	4	6.4	5.2	7	20	35	0.5	7	105125	Δ	▲
L105.1840.04.4.HV7	0.4	4	6.4	5.2	7	25	40	0.5	7	105125	Δ	Δ
L105.1840.04.5.HV7	0.4	4	6.4	5.2	7	30	45	0.5	7	105125		Δ

	EG35	TH35
P	●	●
M	●	●
K	o	●
N	-	●
S	-	●
H	-	-

刀片
Insert

105

Ø ≥ 4 mm

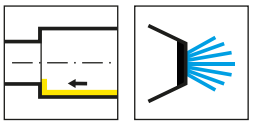

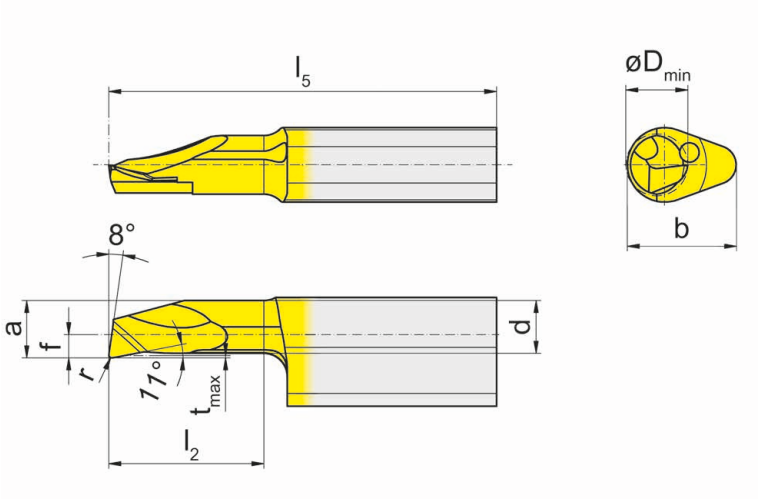

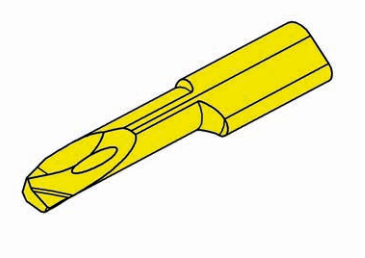

R=右手型-如图
R = right hand version shown

L=左手型
L = left hand version

▲ 库存
on stock

Δ 4周
4 weeks

硬质合金牌号
Carbide grades

产品型号 Part number	r	f	a	d	b	l_2	l_5	t_{max}	D_{min}	HIS		EG35	TH35
R105.1019.005.1.4	0.05	1.5	3.7	3.4	7	10	25	0.15	4	105125		▲	▲
R105.1019.005.2.4	0.05	1.5	3.7	3.4	7	15	30	0.15	4	105125		Δ	▲
R105.1019.005.3.4	0.05	1.5	3.7	3.4	7	20	35	0.15	4	105125		Δ	▲
R105.1019.005.4.4	0.05	1.5	3.7	3.4	7	25	40	0.15	4	105125		Δ	▲
R105.1019.1.4	0.2	1.5	3.7	3.4	7	10	25	0.15	4	105125		▲	▲
R105.1019.2.4	0.2	1.5	3.7	3.4	7	15	30	0.15	4	105125		▲	▲
R105.1019.3.4	0.2	1.5	3.7	3.4	7	20	35	0.15	4	105125		▲	▲
R105.1019.4.4	0.2	1.5	3.7	3.4	7	25	40	0.15	4	105125		▲	▲
L105.1019.005.1.4	0.05	1.5	3.7	3.4	7	10	25	0.15	4	105125		▲	▲
L105.1019.005.2.4	0.05	1.5	3.7	3.4	7	15	30	0.15	4	105125		Δ	▲
L105.1019.005.3.4	0.05	1.5	3.7	3.4	7	20	35	0.15	4	105125		Δ	▲
L105.1019.005.4.4	0.05	1.5	3.7	3.4	7	25	40	0.15	4	105125		Δ	▲
L105.1019.1.4	0.2	1.5	3.7	3.4	7	10	25	0.15	4	105125		Δ	▲
L105.1019.2.4	0.2	1.5	3.7	3.4	7	15	30	0.15	4	105125		Δ	▲
L105.1019.3.4	0.2	1.5	3.7	3.4	7	20	35	0.15	4	105125		Δ	▲
L105.1019.4.4	0.2	1.5	3.7	3.4	7	25	40	0.15	4	105125		Δ	▲

加强型
reinforced version

P	●	●
M	●	●
K	o	●
N	-	●
S	-	●
H	-	-

刀片
Insert

105 Ø ≥ 5 mm

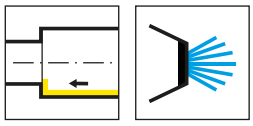

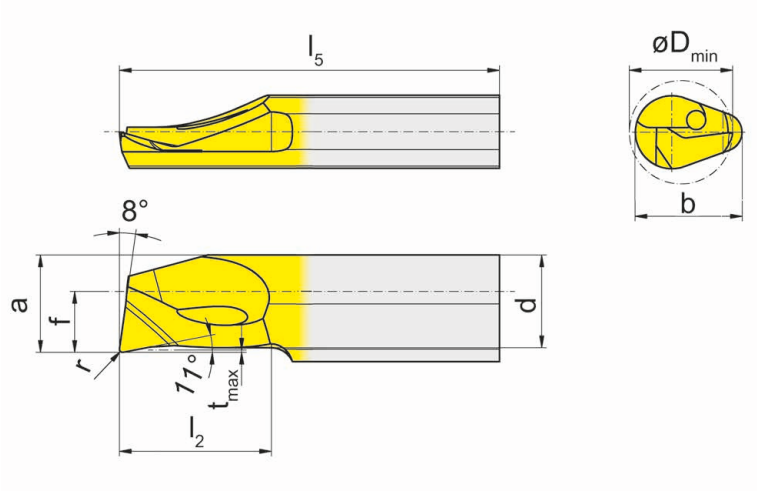

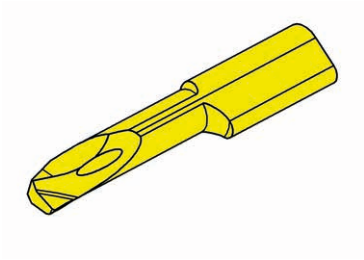

硬质合金牌号
Carbide grades

R=右手型-如图
R = right hand version shown

L=左手型
L = left hand version

▲ 库存
on stock

Δ 4周
4 weeks

产品型号 Part number	r	f	a	d	b	l_2	l_5	t_{max}	D_{min}	HIS	EG35	TH35
R105.1023.005.1.5	0.05	2.8	4.7	4.4	7	10	25	0.15	5	105125	▲	▲
R105.1023.005.2.5	0.05	2.8	4.7	4.4	7	15	30	0.15	5	105125	▲	▲
R105.1023.005.3.5	0.05	2.8	4.7	4.4	7	20	35	0.15	5	105125	Δ	▲
R105.1023.005.4.5	0.05	2.8	4.7	4.4	7	25	40	0.15	5	105125	Δ	▲
R105.1023.005.5.5	0.05	2.8	4.7	4.4	7	30	45	0.15	5	105125	Δ	▲
R105.1023.005.6.5	0.05	2.8	4.7	4.4	7	35	50	0.15	5	105125	Δ	▲
R105.1023.1.5	0.2	2.8	4.7	4.4	7	10	25	0.15	5	105125	▲	▲
R105.1023.2.5	0.2	2.8	4.7	4.4	7	15	30	0.15	5	105125	▲	▲
R105.1023.3.5	0.2	2.8	4.7	4.4	7	20	35	0.15	5	105125	▲	▲
R105.1023.4.5	0.2	2.8	4.7	4.4	7	25	40	0.15	5	105125	▲	▲
R105.1023.5.5	0.2	2.8	4.7	4.4	7	30	45	0.15	5	105125	▲	▲
R105.1023.6.5	0.2	2.8	4.7	4.4	7	35	50	0.15	5	105125	▲	▲
L105.1023.005.1.5	0.05	2.8	4.7	4.4	7	10	25	0.15	5	105125	Δ	▲
L105.1023.005.2.5	0.05	2.8	4.7	4.4	7	15	30	0.15	5	105125	Δ	Δ
L105.1023.005.3.5	0.05	2.8	4.7	4.4	7	20	35	0.15	5	105125	Δ	▲
L105.1023.005.4.5	0.05	2.8	4.7	4.4	7	25	40	0.15	5	105125	Δ	▲
L105.1023.005.5.5	0.05	2.8	4.7	4.4	7	30	45	0.15	5	105125	Δ	▲
L105.1023.005.6.5	0.05	2.8	4.7	4.4	7	35	50	0.15	5	105125	Δ	▲
L105.1023.1.5	0.2	2.8	4.7	4.4	7	10	25	0.15	5	105125	Δ	▲
L105.1023.2.5	0.2	2.8	4.7	4.4	7	15	30	0.15	5	105125		▲
L105.1023.3.5	0.2	2.8	4.7	4.4	7	20	35	0.15	5	105125	Δ	▲
L105.1023.4.5	0.2	2.8	4.7	4.4	7	25	40	0.15	5	105125	Δ	▲
L105.1023.5.5	0.2	2.8	4.7	4.4	7	30	45	0.15	5	105125	Δ	▲
L105.1023.6.5	0.2	2.8	4.7	4.4	7	35	50	0.15	5	105125	Δ	▲

加强型
reinforced version

P	●	●
M	●	●
K	o	●
N	-	●
S	-	●
H	-	-

刀片
Insert

105

Ø ≥ 6 mm

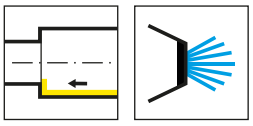

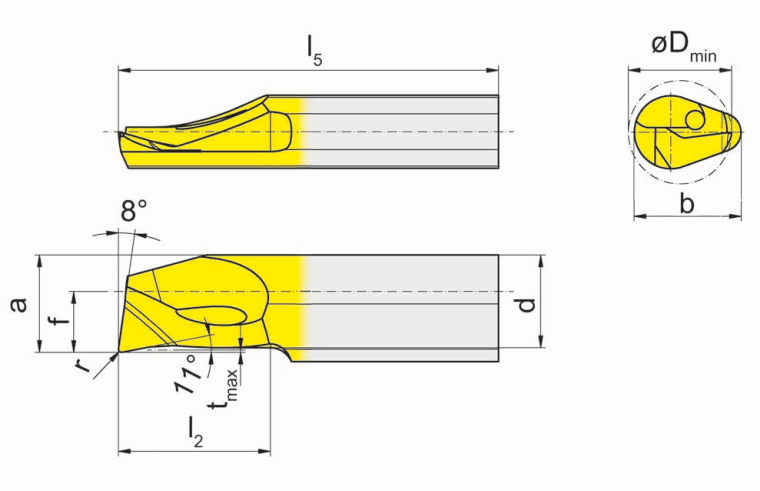

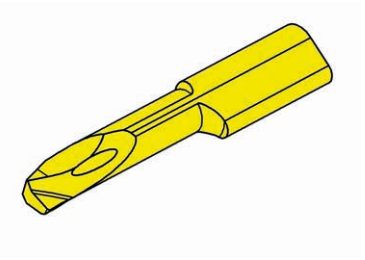

R=右手型-如图
R = right hand version shown

L=左手型
L = left hand version

▲ 库存
on stock

Δ 4周
4 weeks

硬质合金牌号
Carbide grades

产品型号 Part number	r	f	a	d	b	l_2	l_5	t_{max}	D_{min}	HIS		EG35	TH35
R105.1033.005.1.6	0.05	3.3	5.7	5.4	7	10	25	0.15	6	105125		▲	▲
R105.1033.005.2.6	0.05	3.3	5.7	5.4	7	15	30	0.15	6	105125		Δ	▲
R105.1033.005.3.6	0.05	3.3	5.7	5.4	7	20	35	0.15	6	105125		▲	▲
R105.1033.005.4.6	0.05	3.3	5.7	5.4	7	25	40	0.15	6	105125		Δ	▲
R105.1033.005.5.6	0.05	3.3	5.7	5.4	7	30	45	0.15	6	105125		Δ	▲
R105.1033.005.6.6	0.05	3.3	5.7	5.4	7	35	50	0.15	6	105125		Δ	▲
R105.1033.1.6	0.2	3.3	5.7	5.4	7	10	25	0.15	6	105125		▲	▲
R105.1033.2.6	0.2	3.3	5.7	5.4	7	15	30	0.15	6	105125		▲	▲
R105.1033.3.6	0.2	3.3	5.7	5.4	7	20	35	0.15	6	105125		▲	▲
R105.1033.4.6	0.2	3.3	5.7	5.4	7	25	40	0.15	6	105125		▲	▲
R105.1033.5.6	0.2	3.3	5.7	5.4	7	30	45	0.15	6	105125		▲	▲
R105.1033.6.6	0.2	3.3	5.7	5.4	7	35	50	0.15	6	105125		▲	▲
L105.1033.005.1.6	0.05	3.3	5.7	5.4	7	10	25	0.15	6	105125		Δ	▲
L105.1033.005.2.6	0.05	3.3	5.7	5.4	7	15	30	0.15	6	105125		Δ	▲
L105.1033.005.3.6	0.05	3.3	5.7	5.4	7	20	35	0.15	6	105125		Δ	▲
L105.1033.005.4.6	0.05	3.3	5.7	5.4	7	25	40	0.15	6	105125		Δ	Δ
L105.1033.005.5.6	0.05	3.3	5.7	5.4	7	30	45	0.15	6	105125		Δ	▲
L105.1033.005.6.6	0.05	3.3	5.7	5.4	7	35	50	0.15	6	105125		Δ	▲
L105.1033.1.6	0.2	3.3	5.7	5.4	7	10	25	0.15	6	105125			▲
L105.1033.2.6	0.2	3.3	5.7	5.4	7	15	30	0.15	6	105125		Δ	▲
L105.1033.3.6	0.2	3.3	5.7	5.4	7	20	35	0.15	6	105125		Δ	▲
L105.1033.4.6	0.2	3.3	5.7	5.4	7	25	40	0.15	6	105125		Δ	▲
L105.1033.5.6	0.2	3.3	5.7	5.4	7	30	45	0.15	6	105125		Δ	▲
L105.1033.6.6	0.2	3.3	5.7	5.4	7	35	50	0.15	6	105125		Δ	▲

加强型
reinforced version

P	●	●
M	●	●
K	o	●
N	-	●
S	-	●
H	-	-

刀片
Insert

105

Ø ≥ 6.8 mm

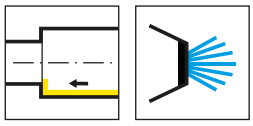

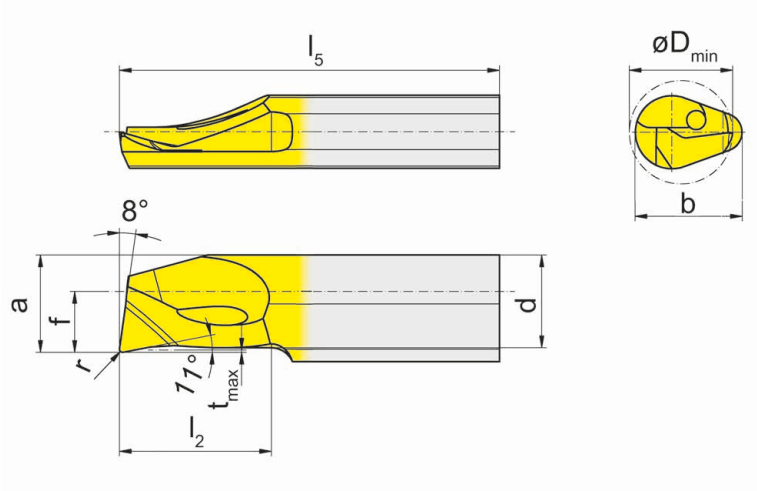

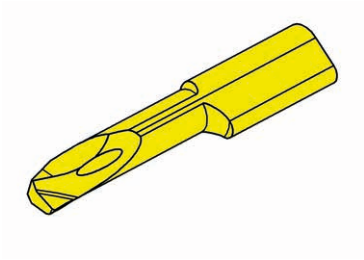

R=右手型-如图
R = right hand version shown

L=左手型
L = left hand version

▲ 库存
on stock

Δ 4周
4 weeks

硬质合金牌号
Carbide grades

产品型号 Part number	r	f	a	d	b	l_2	l_5	t_{max}	D_{min}	HIS		EG35	TH35
R105.1040.1.7	0.2	4	6.4	6.1	7	10	25	0.15	6.8	105125		▲	▲
R105.1040.2.7	0.2	4	6.4	6.1	7	15	30	0.15	6.8	105125		▲	▲
R105.1040.3.7	0.2	4	6.4	6.1	7	20	35	0.15	6.8	105125		▲	▲
R105.1040.4.7	0.2	4	6.4	6.1	7	25	40	0.15	6.8	105125		▲	▲
R105.1040.5.7	0.2	4	6.4	6.1	7	30	45	0.15	6.8	105125		▲	▲
R105.1040.6.7	0.2	4	6.4	6.1	7	35	50	0.15	6.8	105125		▲	▲
L105.1040.1.7	0.2	4	6.4	6.1	7	10	25	0.15	6.8	105125		Δ	▲
L105.1040.2.7	0.2	4	6.4	6.1	7	15	30	0.15	6.8	105125		Δ	▲
L105.1040.3.7	0.2	4	6.4	6.1	7	20	35	0.15	6.8	105125		Δ	▲
L105.1040.4.7	0.2	4	6.4	6.1	7	25	40	0.15	6.8	105125		Δ	▲
L105.1040.5.7	0.2	4	6.4	6.1	7	30	45	0.15	6.8	105125		Δ	▲
L105.1040.6.7	0.2	4	6.4	6.1	7	35	50	0.15	6.8	105125		Δ	▲
											P	●	●
											M	●	●
											K	o	●
											N	-	●
											S	-	●
											H	-	-

加强型
reinforced version

刀片
Insert

105

Ø ≥ 2 mm

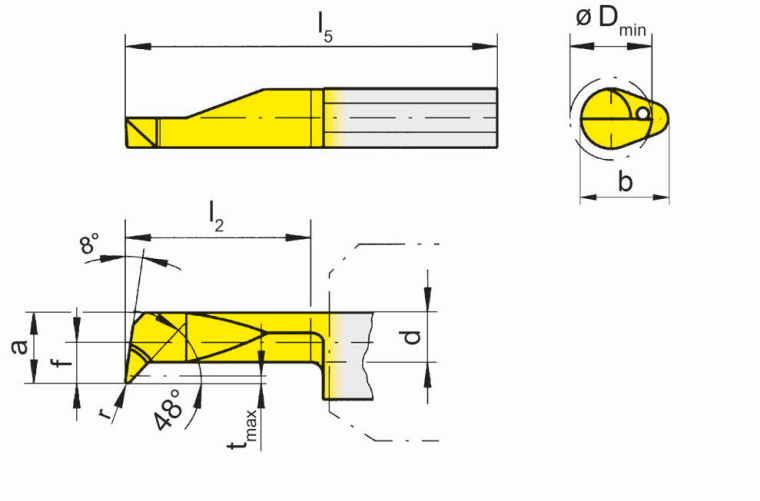

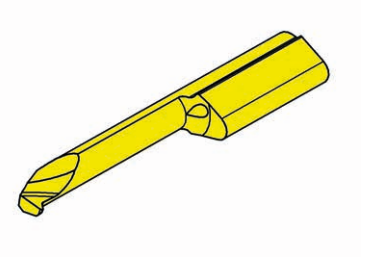

R=右手型-如图
R = right hand version shown

L=左手型
L = left hand version

硬质合金牌号
Carbide grades

▲ 库存
on stock

Δ 4周
4 weeks

产品型号 Part number	r	f	a	d	b	l_2	l_5	t_{max}	D_{min}	HIS	MG12	AN25	EG35	ES15	TH35	TI25	TN35
R105.4715.005.1.2	0.05	1.5	1.9	1.45	5.9	9	25	0.3	2	105123		▲	▲	▲			
R105.4715.005.2.2	0.05	1.5	1.9	1.45	5.9	12	30	0.3	2	105123		▲	▲	Δ			
R105.4713.005.1.3	0.05	1.3	2.6	2	5.9	10	25	0.4	3	105123	▲	▲	▲	▲			
R105.4713.005.2.3	0.05	1.3	2.6	2	5.9	15	30	0.4	3	105123		▲	▲	▲			
R105.4719.1.4	0.15	1.9	3.7	2.9	6.4	10	25	0.6	4	105124			▲		▲		
R105.4719.3.4	0.15	1.9	3.7	2.9	6.4	20	35	0.6	4	105124	Δ		▲		▲	▲	▲
R105.4723.2.5	0.15	2.3	4.7	3.7	7	15	30	0.8	5	105125			▲		▲		Δ
R105.4723.4.5	0.15	2.3	4.7	3.7	7	25	40	0.8	5	105125			▲		▲	▲	▲
R105.4733.3.6	0.15	3.3	5.7	3.7	7	20	35	1.8	6	105125			▲		▲		
R105.4733.5.6	0.15	3.3	5.7	3.7	7	30	45	1.8	6	105125	Δ		▲		▲	Δ	▲
L105.4719.1.4	0.15	1.9	3.7	2.9	6.4	10	25	0.6	4	105124			▲		▲		
L105.4719.3.4	0.15	1.9	3.7	2.9	6.4	20	35	0.6	4	105124			▲		▲	▲	▲
L105.4723.2.5	0.15	2.3	4.7	3.7	7	15	30	0.8	5	105125			Δ		▲		
L105.4723.4.5	0.15	2.3	4.7	3.7	7	25	40	0.8	5	105125			▲		▲	▲	▲
L105.4733.3.6	0.15	3.3	5.7	3.7	7	20	35	1.8	6	105125			Δ		▲		
L105.4733.5.6	0.15	3.3	5.7	3.7	7	30	45	1.8	6	105125			▲		▲	Δ	▲
P											o	●	●	●	●	●	●
M											-	o	●	●	●	●	●
K											-	-	o	o	●	●	●
N											-	-	-	-	●	●	●
S											-	-	-	-	●	●	●
H											-	-	-	-	-	-	-

刀片
Insert

105

Ø ≥ 3 mm

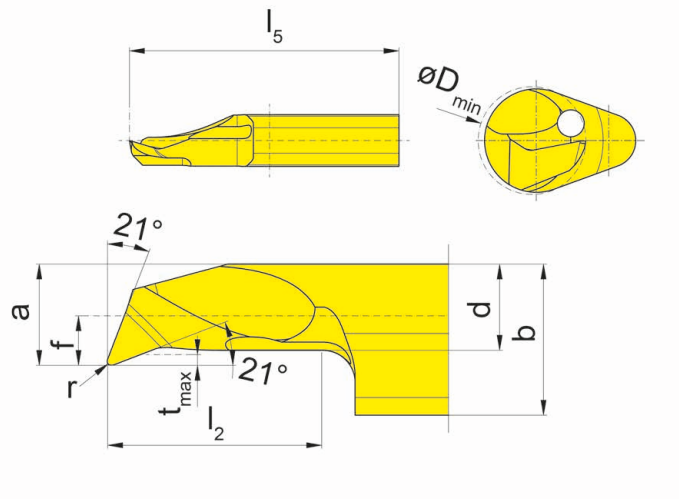

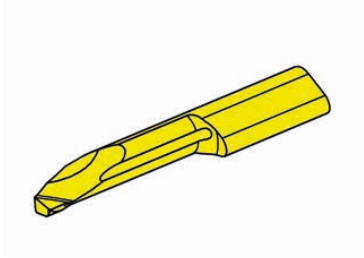

R=右手型-如图
R = right hand version shown

L=左手型
L = left hand version

硬质合金牌号
Carbide grades

▲ 库存
on stock

Δ 4周
4 weeks

产品型号 Part number	r	f	a	d	b	l_2	l_5	t_{max}	D_{min}	HIS		EG35
R105.2113.1.3	0.1	1.3	2.6	2.3	5.9	10	25	0.15	3	105123		▲
R105.2113.2.3	0.1	1.3	2.6	2.3	5.9	15	30	0.15	3	105123		▲
R105.2113.3.3	0.1	1.3	2.6	2.3	5.9	20	35	0.15	3	105123		▲
R105.2119.1.4	0.15	1.9	3.7	3	6.4	10	25	0.3	4	105124		▲
R105.2119.2.4	0.15	1.9	3.7	3	6.4	15	30	0.3	4	105124		▲
R105.2119.3.4	0.15	1.9	3.7	3	6.4	20	35	0.3	4	105124		▲
R105.2119.4.4	0.15	1.9	3.7	3	6.4	25	40	0.3	4	105124		Δ
R105.2123.1.5	0.2	2.3	4.7	4	7	10	25	0.5	5	105125		Δ
R105.2123.2.5	0.2	2.3	4.7	4	7	15	30	0.5	5	105125		▲
R105.2123.3.5	0.2	2.3	4.7	4	7	20	35	0.5	5	105125		▲
R105.2123.4.5	0.2	2.3	4.7	4	7	25	40	0.5	5	105125		Δ
R105.2123.5.5	0.2	2.3	4.7	4	7	30	45	0.5	5	105125		Δ
R105.2123.6.5	0.2	2.3	4.7	4	7	35	50	0.5	5	105125		▲
L105.2113.1.3	0.1	1.3	2.6	2.3	5.9	10	25	0.15	3	105123		▲
L105.2113.2.3	0.1	1.3	2.6	2.3	5.9	15	30	0.15	3	105123		▲
L105.2113.3.3	0.1	1.3	2.6	2.3	5.9	20	35	0.15	3	105123		▲
L105.2119.1.4	0.15	1.9	3.7	3	6.4	10	25	0.3	4	105124		▲
L105.2119.2.4	0.15	1.9	3.7	3	6.4	15	30	0.3	4	105124		Δ
L105.2119.3.4	0.15	1.9	3.7	3	6.4	20	35	0.3	4	105124		▲
L105.2119.4.4	0.15	1.9	3.7	3	6.4	25	40	0.3	4	105124		Δ
L105.2123.1.5	0.2	2.3	4.7	4	7	10	25	0.5	5	105125		Δ
L105.2123.2.5	0.2	2.3	4.7	4	7	15	30	0.5	5	105125		▲
L105.2123.3.5	0.2	2.3	4.7	4	7	20	35	0.5	5	105125		Δ
L105.2123.4.5	0.2	2.3	4.7	4	7	25	40	0.5	5	105125		Δ
L105.2123.5.5	0.2	2.3	4.7	4	7	30	45	0.5	5	105125		Δ
L105.2123.6.5	0.2	2.3	4.7	4	7	35	50	0.5	5	105125		Δ

P	●
M	●
K	o
N	-
S	-
H	-

刀片
Insert

105

Ø ≥ 6 mm

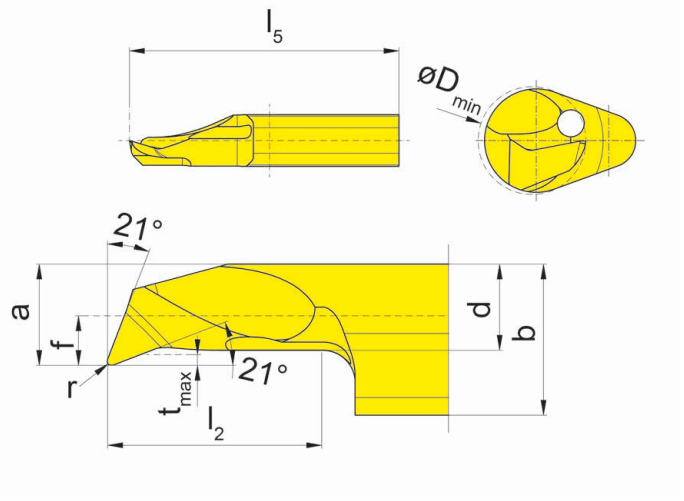

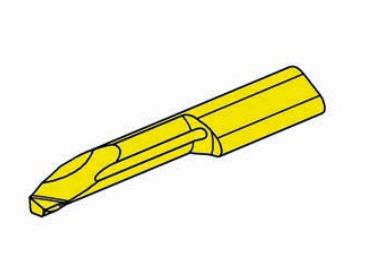

R=右手型-如图
R = right hand version shown

L=左手型
L = left hand version

硬质合金牌号
Carbide grades

▲ 库存
on stock

Δ 4周
4 weeks

产品型号 Part number	r	f	a	d	b	l_2	l_5	t_{max}	D_{min}	HIS		EG35
R105.2133.1.6	0.2	3.3	5.7	4.7	7	10	25	0.5	6	105125		▲
R105.2133.2.6	0.2	3.3	5.7	4.7	7	15	30	0.5	6	105125		▲
R105.2133.3.6	0.2	3.3	5.7	4.7	7	20	35	0.5	6	105125		▲
R105.2133.4.6	0.2	3.3	5.7	4.7	7	25	40	0.5	6	105125		Δ
R105.2133.5.6	0.2	3.3	5.7	4.7	7	30	45	0.5	6	105125		Δ
R105.2133.6.6	0.2	3.3	5.7	4.7	7	35	50	0.5	6	105125		Δ
R105.2140.1.7	0.2	4	6.4	5.2	7	10	25	0.5	7	105125		▲
R105.2140.2.7	0.2	4	6.4	5.2	7	15	30	0.5	7	105125		▲
R105.2140.3.7	0.2	4	6.4	5.2	7	20	35	0.5	7	105125		▲
R105.2140.4.7	0.2	4	6.4	5.2	7	25	40	0.5	7	105125		Δ
R105.2140.5.7	0.2	4	6.4	5.2	7	30	45	0.5	7	105125		Δ
R105.2140.6.7	0.2	4	6.4	5.2	7	35	50	0.5	7	105125		Δ
L105.2133.1.6	0.2	3.3	5.7	4.7	7	10	25	0.5	6	105125		▲
L105.2133.2.6	0.2	3.3	5.7	4.7	7	15	30	0.5	6	105125		▲
L105.2133.3.6	0.2	3.3	5.7	4.7	7	20	35	0.5	6	105125		▲
L105.2133.4.6	0.2	3.3	5.7	4.7	7	25	40	0.5	6	105125		Δ
L105.2133.5.6	0.2	3.3	5.7	4.7	7	30	45	0.5	6	105125		Δ
L105.2133.6.6	0.2	3.3	5.7	4.7	7	35	50	0.5	6	105125		Δ
L105.2140.1.7	0.2	4	6.4	5.2	7	10	25	0.5	7	105125		▲
L105.2140.2.7	0.2	4	6.4	5.2	7	15	30	0.5	7	105125		▲
L105.2140.3.7	0.2	4	6.4	5.2	7	20	35	0.5	7	105125		Δ
L105.2140.4.7	0.2	4	6.4	5.2	7	25	40	0.5	7	105125		Δ
L105.2140.5.7	0.2	4	6.4	5.2	7	30	45	0.5	7	105125		Δ
L105.2140.6.7	0.2	4	6.4	5.2	7	35	50	0.5	7	105125		Δ

P	●
M	●
K	o
N	-
S	-
H	-

刀片
Insert

105

Ø ≥ 3 mm

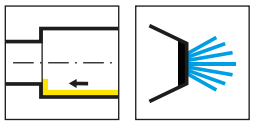

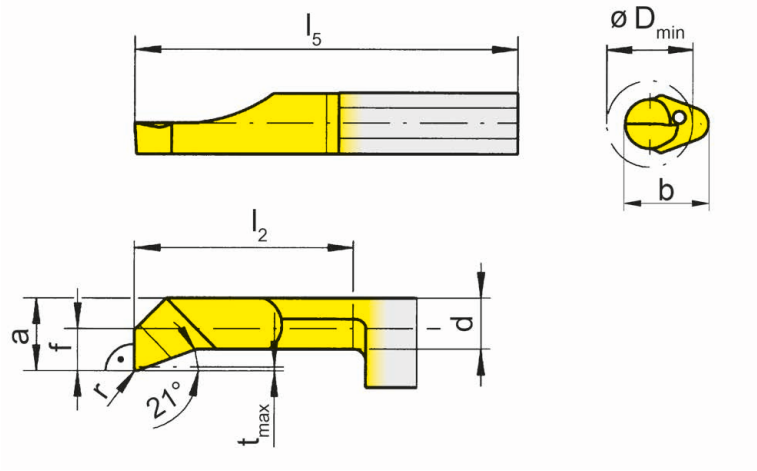

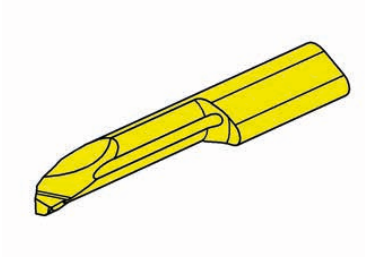

R=右手型-如图
R = right hand version shown

L=左手型
L = left hand version

▲ 库存
on stock

硬质合金牌号
Carbide grades

Δ 4周
4 weeks

产品型号 Part number	r	f	a	d	b	l_2	l_5	t_{max}	D_{min}	HIS		EG35	TH35	TI25	TN35
R105.9013.01.1.3	0.1	1.3	2.6	2.3	5.9	10	25	0.15	3	105123		Δ	▲		
R105.9013.01.2.3	0.1	1.3	2.6	2.3	5.9	15	30	0.15	3	105123		Δ	▲		
R105.9013.01.3.3	0.1	1.3	2.6	2.3	5.9	20	35	0.15	3	105123		▲	Δ		
R105.9013.1.3	0.2	1.3	2.6	2.3	5.9	10	25	0.15	3	105123		▲			▲
R105.9013.2.3	0.2	1.3	2.6	2.3	5.9	15	30	0.15	3	105123		▲			▲
R105.9019.01.1.4	0.1	1.9	3.7	2.9	6.4	10	25	0.3	4	105124		Δ	▲		
R105.9019.01.2.4	0.1	1.9	3.7	2.9	6.4	15	30	0.3	4	105124		Δ	▲		
R105.9019.01.3.4	0.1	1.9	3.7	2.9	6.4	20	35	0.3	4	105124		▲	▲		
R105.9019.1.4	0.2	1.9	3.7	2.9	6.4	10	25	0.3	4	105124		▲			▲
R105.9019.2.4	0.2	1.9	3.7	2.9	6.4	15	30	0.3	4	105124		▲		Δ	▲
L105.9013.01.1.3	0.1	1.3	2.6	2.3	5.9	10	25	0.15	3	105123		Δ	▲		
L105.9013.01.2.3	0.1	1.3	2.6	2.3	5.9	15	30	0.15	3	105123		Δ	Δ		
L105.9013.01.3.3	0.1	1.3	2.6	2.3	5.9	20	35	0.15	3	105123		Δ	Δ		
L105.9013.1.3	0.2	1.3	2.6	2.3	5.9	10	25	0.15	3	105123		▲			▲
L105.9013.2.3	0.2	1.3	2.6	2.3	5.9	15	30	0.15	3	105123		▲			▲
L105.9019.01.1.4	0.1	1.9	3.7	2.9	6.4	10	25	0.3	4	105124		Δ	Δ		
L105.9019.01.2.4	0.1	1.9	3.7	2.9	6.4	15	30	0.3	4	105124		Δ	Δ		
L105.9019.01.3.4	0.1	1.9	3.7	2.9	6.4	20	35	0.3	4	105124		Δ	Δ		
L105.9019.1.4	0.2	1.9	3.7	2.9	6.4	10	25	0.3	4	105124		▲			▲
L105.9019.2.4	0.2	1.9	3.7	2.9	6.4	15	30	0.3	4	105124		▲			▲
											P	●	●	●	●
											M	●	●	●	●
											K	o	●	●	●
											N	-	●	●	●
											S	-	●	●	●
											H	-	-	-	-

刀片
Insert

105

Ø ≥ 5 mm

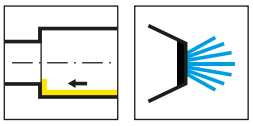

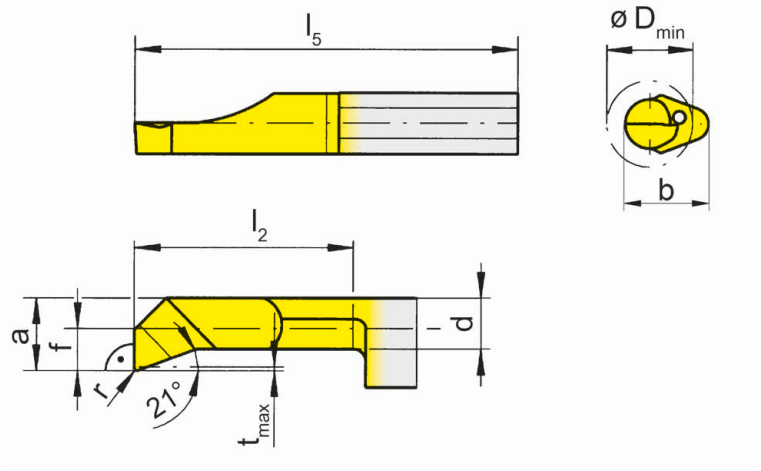

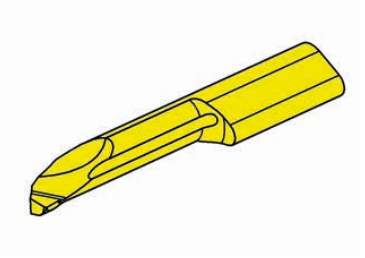

R=右手型-如图
R = right hand version shown

L=左手型
L = left hand version

▲ 库存
on stock

硬质合金牌号
Carbide grades

Δ 4周
4 weeks

产品型号 Part number	r	f	a	d	b	l_2	l_5	t_{max}	D_{min}	HIS		EG35	TH35	TN35
R105.9023.01.1.5	0.1	2.3	4.7	4	7	10	25	0.5	5	105125		Δ	▲	
R105.9023.01.2.5	0.1	2.3	4.7	4	7	15	30	0.5	5	105125		▲	▲	
R105.9023.01.3.5	0.1	2.3	4.7	4	7	20	35	0.5	5	105125		▲	▲	
R105.9023.01.4.5	0.1	2.3	4.7	4	7	25	40	0.5	5	105125		Δ	▲	
R105.9023.1.5	0.2	2.3	4.7	4	7	10	25	0.5	5	105125		▲	▲	▲
R105.9023.2.5	0.2	2.3	4.7	4	7	15	30	0.5	5	105125		▲	▲	▲
R105.9023.3.5	0.2	2.3	4.7	4	7	20	35	0.5	5	105125		▲		▲
R105.9033.1.6	0.2	3.3	5.7	4.7	7	10	25	0.5	6	105125		Δ	▲	
R105.9033.2.6	0.2	3.3	5.7	4.7	7	15	30	0.5	6	105125		Δ	▲	
R105.9033.3.6	0.2	3.3	5.7	4.7	7	20	35	0.5	6	105125		Δ	▲	
R105.9033.4.6	0.2	3.3	5.7	4.7	7	25	40	0.5	6	105125		Δ	▲	
R105.9033.5.6	0.2	3.3	5.7	4.7	7	30	45	0.5	6	105125		Δ	▲	
L105.9023.01.1.5	0.1	2.3	4.7	4	7	10	25	0.5	5	105125		Δ	Δ	
L105.9023.01.2.5	0.1	2.3	4.7	4	7	15	30	0.5	5	105125		Δ	▲	
L105.9023.01.3.5	0.1	2.3	4.7	4	7	20	35	0.5	5	105125		Δ	▲	
L105.9023.01.4.5	0.1	2.3	4.7	4	7	25	40	0.5	5	105125		Δ	Δ	
L105.9023.1.5	0.2	2.3	4.7	4	7	10	25	0.5	5	105125		▲		▲
L105.9023.2.5	0.2	2.3	4.7	4	7	15	30	0.5	5	105125		▲		▲
L105.9023.3.5	0.2	2.3	4.7	4	7	20	35	0.5	5	105125				▲
L105.9033.1.6	0.2	3.3	5.7	4.7	7	10	25	0.5	6	105125		Δ		
L105.9033.2.6	0.2	3.3	5.7	4.7	7	15	30	0.5	6	105125		Δ	Δ	
L105.9033.3.6	0.2	3.3	5.7	4.7	7	20	35	0.5	6	105125		Δ	▲	
L105.9033.4.6	0.2	3.3	5.7	4.7	7	25	40	0.5	6	105125		Δ	Δ	
L105.9033.5.6	0.2	3.3	5.7	4.7	7	30	45	0.5	6	105125		Δ	▲	

	EG35	TH35	TN35
P	●	●	●
M	●	●	●
K	o	●	●
N	-	●	●
S	-	●	●
H	-	-	-

刀片
Insert

105

Ø ≥ 5 mm

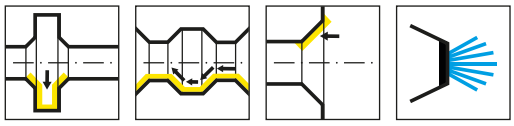

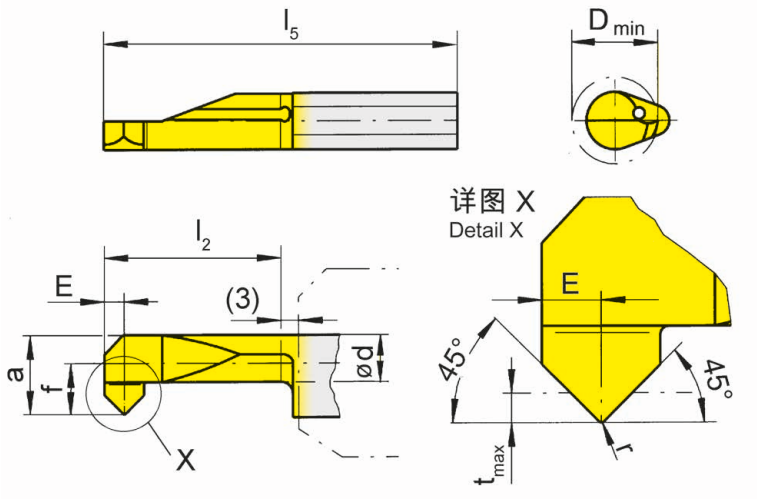

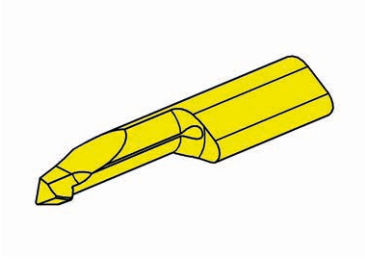

R=右手型-如图
R = right hand version shown

L=左手型
L = left hand version

硬质合金牌号
Carbide grades

▲ 库存
on stock

Δ 4周
4 weeks

产品型号 Part number	r	f	E	a	d	b	l_2	l_5	t_{max}	D_{min}	HIS		EG35	TF45	TI25	TN35
R105.4545.2.5	0.2	2.3	1	4.7	3.5	7	15	30	0.7	5	105125		▲			▲
R105.4545.3.7	0.2	4	1	6.4	4.7	7	20	35	0.7	7	105125		▲			▲
L105.4545.2.5	0.2	2.3	1	4.7	3.5	7	15	30	0.7	5	105125		▲			▲
L105.4545.3.7	0.2	4	1	6.4	4.7	7	20	35	0.7	7	105125		▲		Δ	▲
												P	●	●	●	●
												M	●	●	●	●
												K	o	●	●	●
												N	-	●	●	●
												S	-	●	●	●
												H	-	-	-	-

刀片
Insert

105

Ø ≥ 3 mm

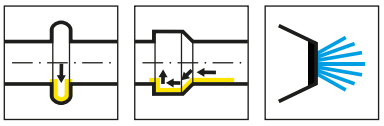

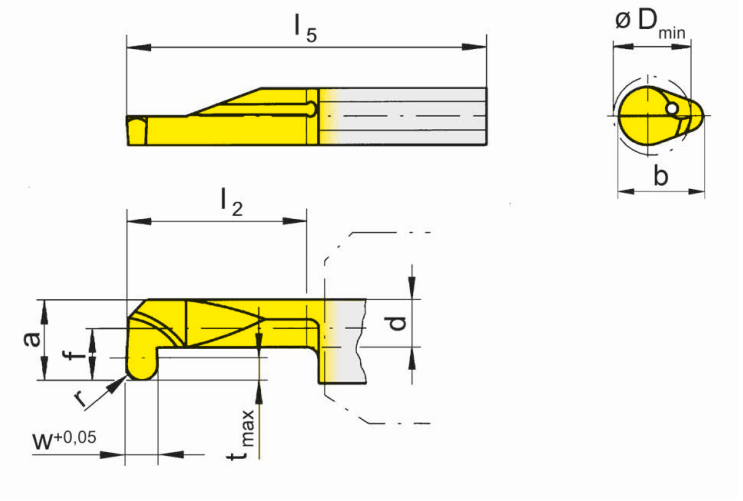

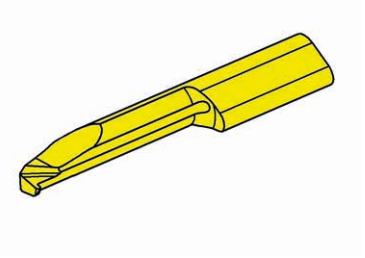

R=右手型-如图
R = right hand version shown

L=左手型
L = left hand version

▲ 库存
on stock

Δ 4周
4 weeks

硬质合金牌号
Carbide grades

产品型号 Part number	w	r	f	a	d	b	l_2	l_5	t_{max}	D_{min}	HIS	AN25	EG35	ES15	TH35	TN35
R105.0025.2.3	0.5	0.25	1.4	2.7	1.9	5.9	15	30	0.6	3	105123	Δ	▲	Δ		
R105.0005.1.4	1	0.5	1.9	3.7	2.7	6.4	10	25	0.8	4	105124		▲		▲	
R105.0005.2.4	1	0.5	1.9	3.7	2.7	6.4	15	30	0.8	4	105124		▲			▲
R105.0025.3.5	0.5	0.25	2.3	4.7	3.9	7	20	35	0.6	5	105125	Δ	▲	Δ		
R105.0005.3.5	1	0.5	2.3	4.7	3.5	7	20	35	1	5	105125		▲			▲
R105.0007.1.5	1.5	0.75	2.3	4.7	3.5	7	10	25	1	5	105125		Δ		▲	
R105.0007.3.5	1.5	0.75	2.3	4.7	3.5	7	20	35	1	5	105125		▲			▲
R105.0010.1.5	2	1	2.3	4.7	3.5	7	10	25	1	5	105125		▲		▲	
R105.0010.3.5	2	1	2.3	4.7	3.5	7	20	35	1	5	105125		▲			▲
L105.0005.1.4	1	0.5	1.9	3.7	2.7	6.4	10	25	0.8	4	105124		Δ		▲	
L105.0005.2.4	1	0.5	1.9	3.7	2.7	6.4	15	30	0.8	4	105124		▲			▲
L105.0005.3.5	1	0.5	2.3	4.7	3.5	7	20	35	1	5	105125		▲			▲
L105.0007.1.5	1.5	0.75	2.3	4.7	3.5	7	10	25	1	5	105125		Δ		Δ	
L105.0007.3.5	1.5	0.75	2.3	4.7	3.5	7	20	35	1	5	105125		Δ			▲
L105.0010.1.5	2	1	2.3	4.7	3.5	7	10	25	1	5	105125		Δ		Δ	
L105.0010.3.5	2	1	2.3	4.7	3.5	7	20	35	1	5	105125		Δ			▲
												P	●	●	●	●	●
												M	o	●	●	●	●
												K	-	o	o	●	●
												N	-	-	-	●	●
												S	-	-	-	●	●
												H	-	-	-	-	-

刀片
Insert

105

Ø ≥ 6 mm

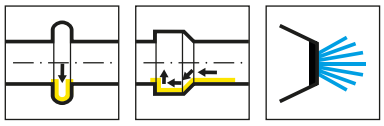

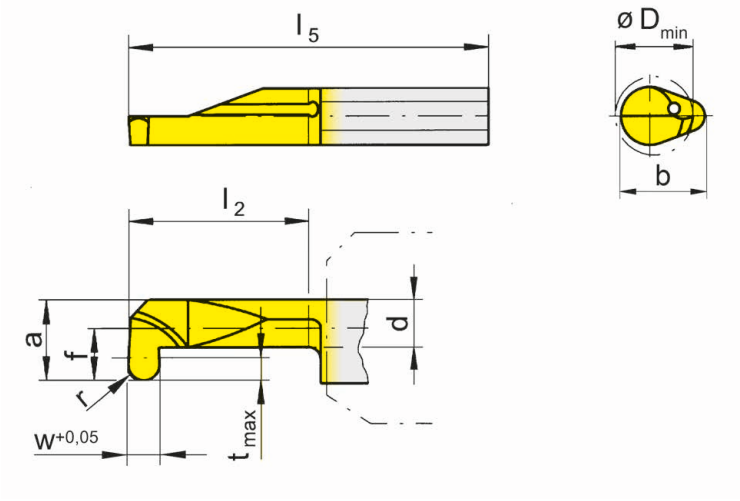

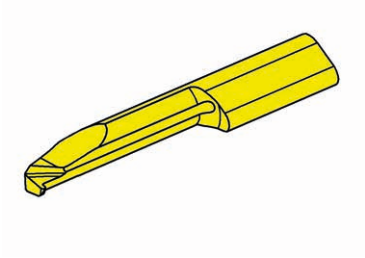

R=右手型-如图
R = right hand version shown

L=左手型
L = left hand version

▲ 库存
on stock

硬质合金牌号
Carbide grades

Δ 4周
4 weeks

产品型号 Part number	w	r	f	a	d	b	l_2	l_5	t_{max}	D_{min}	HIS	EG35	TH35	TN35
R105.0005.2.6	1	0.5	3.3	5.7	3.7	7	15	30	1.8	6	105125	▲	▲	
R105.0007.2.6	1.5	0.75	3.3	5.7	3.7	7	15	30	1.8	6	105125	▲	▲	
R105.0010.2.6	2	1	3.3	5.7	3.7	7	15	30	1.8	6	105125	▲	▲	
R105.0005.4.6	1	0.5	3.3	5.7	3.7	7	25	40	1.8	6	105125	▲		▲
R105.0007.4.6	1.5	0.75	3.3	5.7	3.7	7	25	40	1.8	6	105125	▲		▲
R105.0010.4.6	2	1	3.3	5.7	3.7	7	25	40	1.8	6	105125	▲		▲
L105.0005.2.6	1	0.5	3.3	5.7	3.7	7	15	30	1.8	6	105125	Δ	▲	
L105.0007.2.6	1.5	0.75	3.3	5.7	3.7	7	15	30	1.8	6	105125	Δ	Δ	
L105.0010.2.6	2	1	3.3	5.7	3.7	7	15	30	1.8	6	105125	Δ	Δ	
L105.0005.4.6	1	0.5	3.3	5.7	3.7	7	25	40	1.8	6	105125	Δ		▲
L105.0007.4.6	1.5	0.75	3.3	5.7	3.7	7	25	40	1.8	6	105125	Δ		▲
L105.0010.4.6	2	1	3.3	5.7	3.7	7	25	40	1.8	6	105125			▲

	EG35	TH35	TN35
P	●	●	●
M	●	●	●
K	o	●	●
N	-	●	●
S	-	●	●
H	-	-	-

刀片
Insert

105

Ø ≥ 6.8 mm

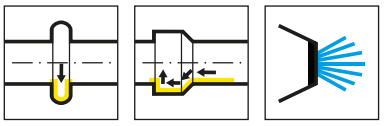

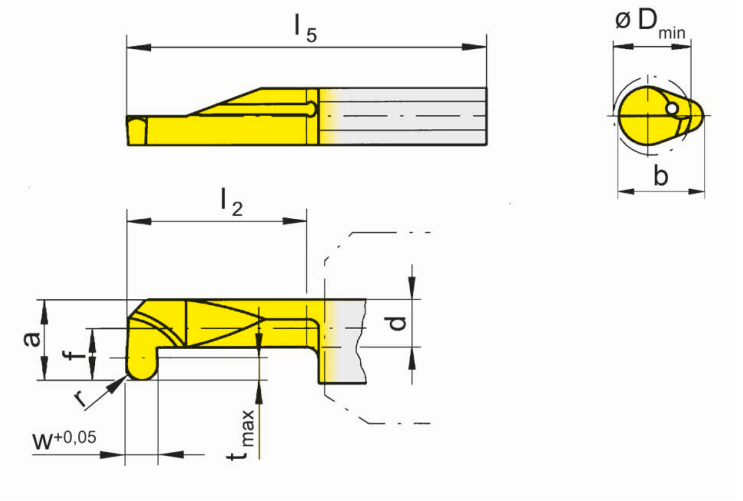

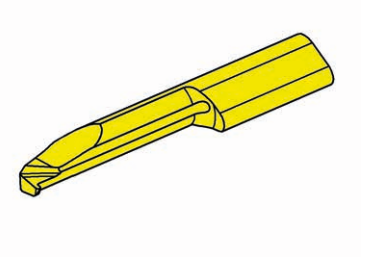

R=右手型-如图
R = right hand version shown

L=左手型
L = left hand version

▲ 库存
on stock

硬质合金牌号
Carbide grades

Δ 4周
4 weeks

产品型号 Part number	w	r	f	a	d	b	l_2	l_5	t_{max}	D_{min}	HIS		EG35	TH35	TN35
R105.0005.3.7	1	0.5	4	6.4	3.7	7	20	35	2.5	6.8	105125		▲	▲	
R105.0007.3.7	1.5	0.75	4	6.4	3.7	7	20	35	2.5	6.8	105125		Δ	▲	
R105.0010.3.7	2	1	4	6.4	3.7	7	20	35	2.5	6.8	105125		▲	▲	
R105.0005.5.7	1	0.5	4	6.4	3.7	7	30	45	2.5	6.8	105125		▲		▲
R105.0007.5.7	1.5	0.75	4	6.4	3.7	7	30	45	2.5	6.8	105125		▲		▲
R105.0010.5.7	2	1	4	6.4	3.7	7	30	45	2.5	6.8	105125		▲		▲
L105.0005.3.7	1	0.5	4	6.4	3.7	7	20	35	2.5	6.8	105125		Δ	▲	
L105.0007.3.7	1.5	0.75	4	6.4	3.7	7	20	35	2.5	6.8	105125		Δ	▲	
L105.0010.3.7	2	1	4	6.4	3.7	7	20	35	2.5	6.8	105125		Δ	▲	
L105.0005.5.7	1	0.5	4	6.4	3.7	7	30	45	2.5	6.8	105125		Δ		▲
L105.0007.5.7	1.5	0.75	4	6.4	3.7	7	30	45	2.5	6.8	105125		Δ		▲
L105.0010.5.7	2	1	4	6.4	3.7	7	30	45	2.5	6.8	105125		Δ		▲
												P	●	●	●
												M	●	●	●
												K	o	●	●
												N	-	●	●
												S	-	●	●
												H	-	-	-

刀片
Insert

105 Ø ≥ 2 mm

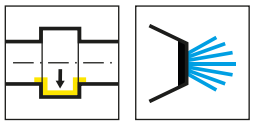

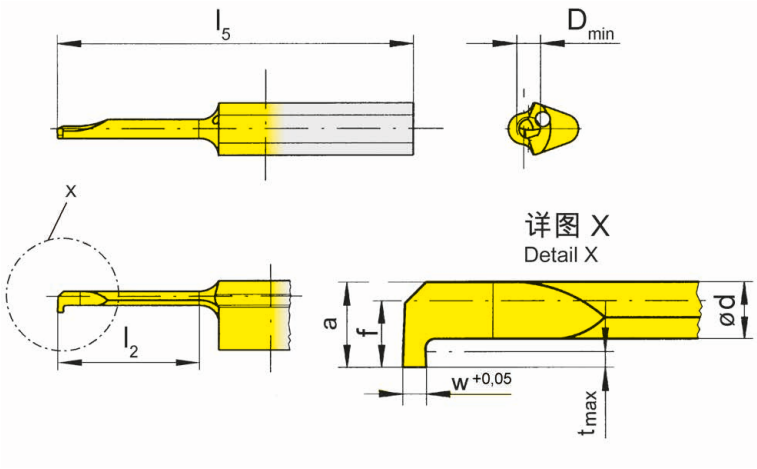

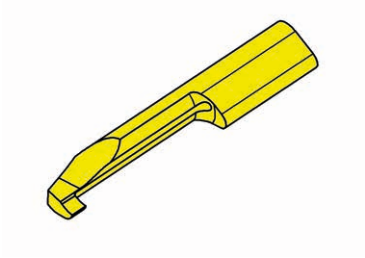

R=右手型-如图
R = right hand version shown

L=左手型
L = left hand version

▲ 库存
on stock

Δ 4周
4 weeks

硬质合金牌号
Carbide grades

产品型号 Part number	w	f	a	d	b	l_2	l_5	t_{max}	D_{min}	HIS		EG35	TI25
R105.0050.0.2	0.5	1.4	1.8	1.2	5.9	6	25	0.4	2	105123		▲	▲
R105.0050.1.2	0.5	1.4	1.8	1.2	5.9	9	25	0.4	2	105123		▲	▲
R105.0050.2.2	0.5	1.4	1.8	1.2	5.9	12	30	0.4	2	105123		▲	▲
L105.0050.0.2	0.5	1.4	1.8	1.2	5.9	6	25	0.4	2	105123		▲	▲
L105.0050.1.2	0.5	1.4	1.8	1.2	5.9	9	25	0.4	2	105123		Δ	▲
L105.0050.2.2	0.5	1.4	1.8	1.2	5.9	12	30	0.4	2	105123		Δ	Δ
											P	●	●
											M	●	●
											K	o	●
											N	-	●
											S	-	●
											H	-	-

刀片
Insert

105

Ø ≥ 3 mm

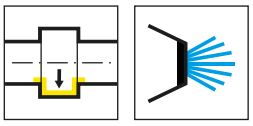

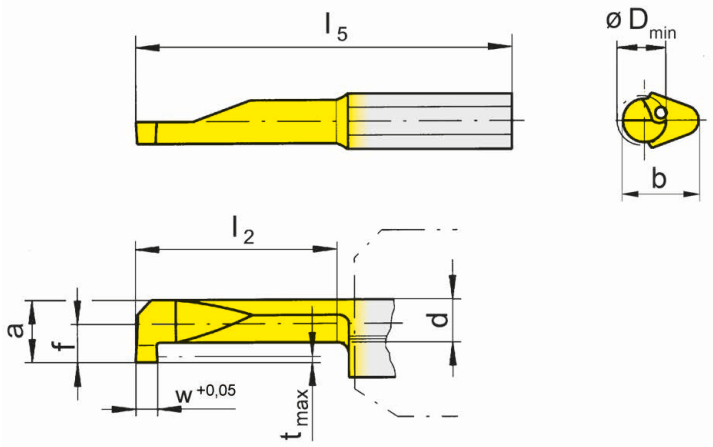

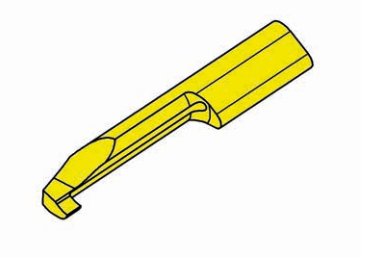

R=右手型-如图
R = right hand version shown

L=左手型
L = left hand version

硬质合金牌号
Carbide grades

▲ 库存
on stock

Δ 4周
4 weeks

产品型号 Part number	w	f	a	d	b	l_2	l_5	t_{max}	D_{min}	HIS	MG12	AN25	EG35	ES15	TI25
R105.0050.1.3	0.5	1.4	2.7	2	5.9	8	25	0.5	3	105123		▲	▲	Δ	
R105.0050.2.3	0.5	1.4	2.7	2	5.9	12	30	0.5	3	105123	Δ	Δ	Δ	Δ	
R105.0050.3.3	0.5	1.4	2.7	2	5.9	16	35	0.5	3	105123		Δ	Δ	Δ	
R105.0070.1.3	0.7	1.4	2.7	1.9	5.9	8	25	0.6	3	105123			▲		▲
R105.0070.2.3	0.7	1.4	2.7	1.9	5.9	12	30	0.6	3	105123			▲		▲
R105.0070.3.3	0.7	1.4	2.7	1.9	5.9	16	35	0.6	3	105123			▲		▲
L105.0070.1.3	0.7	1.4	2.7	1.9	5.9	8	25	0.6	3	105123			▲		▲
L105.0070.2.3	0.7	1.4	2.7	1.9	5.9	12	30	0.6	3	105123			Δ		▲
L105.0070.3.3	0.7	1.4	2.7	1.9	5.9	16	35	0.6	3	105123			Δ		▲
											P	o	●	●	●	●
											M	-	o	●	●	●
											K	-	-	o	o	●
											N	-	-	-	-	●
											S	-	-	-	-	●
											H	-	-	-	-	-

刀片
Insert

105

Ø ≥ 4 mm

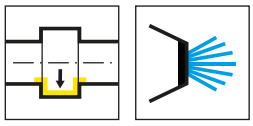

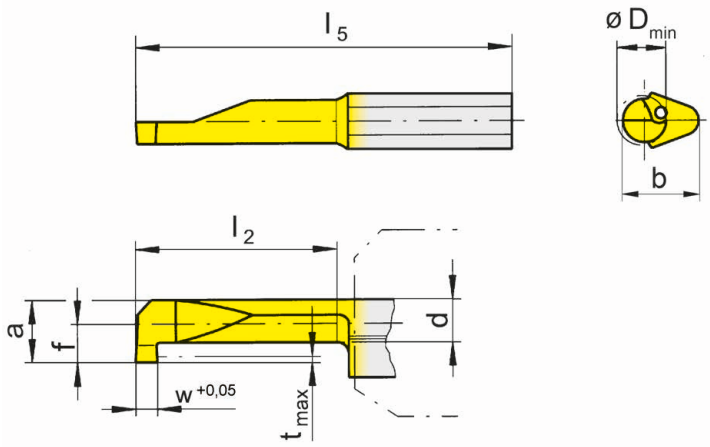

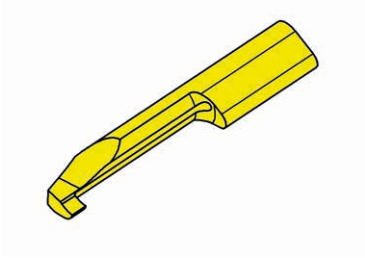

R=右手型-如图
R = right hand version shown

L=左手型
L = left hand version

硬质合金牌号
Carbide grades

▲ 库存
on stock

Δ 4周
4 weeks

产品型号 Part number	w	f	a	d	b	l_2	l_5	t_{max}	D_{min}	HIS		MG12	AN25	EG35	ES15	TN35
R105.0050.1.4	0.5	1.9	3.7	2.9	6.4	10	25	0.6	4	105124			▲	▲	▲	
R105.0050.2.4	0.5	1.9	3.7	2.9	6.4	15	30	0.6	4	105124			Δ	▲		
R105.0050.3.4	0.5	1.9	3.7	2.9	6.4	20	35	0.6	4	105124			Δ	Δ	Δ	
R105.0100.1.4	1	1.9	3.7	2.7	6.4	10	25	0.8	4	105124		▲		▲		▲
R105.0100.2.4	1	1.9	3.7	2.7	6.4	15	30	0.8	4	105124		▲		▲		▲
R105.0100.3.4	1	1.9	3.7	2.7	6.4	20	35	0.8	4	105124		▲		Δ		▲
L105.0100.1.4	1	1.9	3.7	2.7	6.4	10	25	0.8	4	105124		▲		Δ		▲
L105.0100.2.4	1	1.9	3.7	2.7	6.4	15	30	0.8	4	105124		Δ		Δ		▲
L105.0100.3.4	1	1.9	3.7	2.7	6.4	20	35	0.8	4	105124		Δ		Δ		▲
											P	o	●	●	●	●
											M	-	o	●	●	●
											K	-	-	o	o	●
											N	-	-	-	-	●
											S	-	-	-	-	●
											H	-	-	-	-	-

刀片
Insert

105

Ø ≥ 5 mm

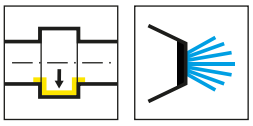

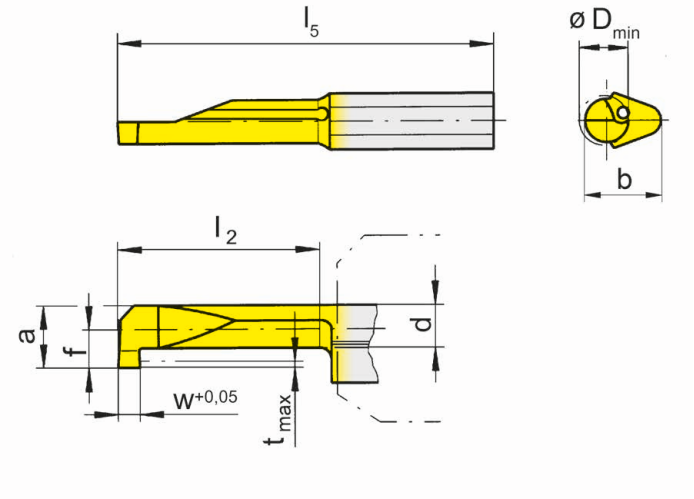

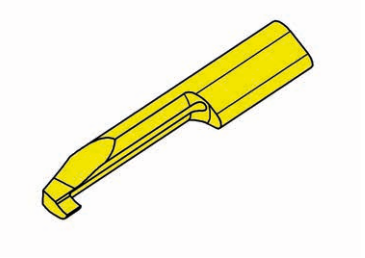

R=右手型-如图
R = right hand version shown

L=左手型
L = left hand version

▲ 库存
on stock

Δ 4周
4 weeks

硬质合金牌号
Carbide grades

产品型号 Part number	w	f	a	d	b	l_2	l_5	t_{max}	D_{min}	HIS		MG12	EG35	TH35	TN35
R105.0100.1.5	1	2.3	4.7	3.5	7	10	25	1	5	105125		▲	▲	▲	▲
R105.0150.1.5	1.5	2.3	4.7	3.5	7	10	25	1	5	105125		▲	▲	▲	▲
R105.0200.1.5	2	2.3	4.7	3.5	7	10	25	1	5	105125		▲	▲	▲	▲
R105.0100.2.5	1	2.3	4.7	3.5	7	15	30	1	5	105125		▲	▲	▲	▲
R105.0150.2.5	1.5	2.3	4.7	3.5	7	15	30	1	5	105125		▲	▲	▲	▲
R105.0200.2.5	2	2.3	4.7	3.5	7	15	30	1	5	105125		▲	▲	▲	▲
R105.0100.3.5	1	2.3	4.7	3.5	7	20	35	1	5	105125		▲	▲	▲	▲
R105.0150.3.5	1.5	2.3	4.7	3.5	7	20	35	1	5	105125		▲	▲	▲	▲
R105.0200.3.5	2	2.3	4.7	3.5	7	20	35	1	5	105125		Δ	▲	▲	▲
L105.0100.1.5	1	2.3	4.7	3.5	7	10	25	1	5	105125		Δ	▲	▲	▲
L105.0150.1.5	1.5	2.3	4.7	3.5	7	10	25	1	5	105125		Δ	Δ	Δ	▲
L105.0200.1.5	2	2.3	4.7	3.5	7	10	25	1	5	105125		Δ	Δ	▲	▲
L105.0100.2.5	1	2.3	4.7	3.5	7	15	30	1	5	105125		Δ	Δ	Δ	▲
L105.0150.2.5	1.5	2.3	4.7	3.5	7	15	30	1	5	105125		Δ	Δ	Δ	▲
L105.0200.2.5	2	2.3	4.7	3.5	7	15	30	1	5	105125		Δ	Δ	▲	▲
L105.0100.3.5	1	2.3	4.7	3.5	7	20	35	1	5	105125		Δ	Δ	Δ	▲
L105.0150.3.5	1.5	2.3	4.7	3.5	7	20	35	1	5	105125		Δ	Δ	Δ	▲
L105.0200.3.5	2	2.3	4.7	3.5	7	20	35	1	5	105125			Δ	Δ	Δ
											P	o	●	●	●
											M	-	●	●	●
											K	-	o	●	●
											N	-	-	●	●
											S	-	-	●	●
											H	-	-	-	-

刀片
Insert

105

Ø ≥ 5 mm

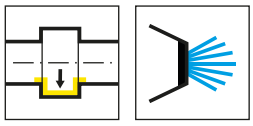

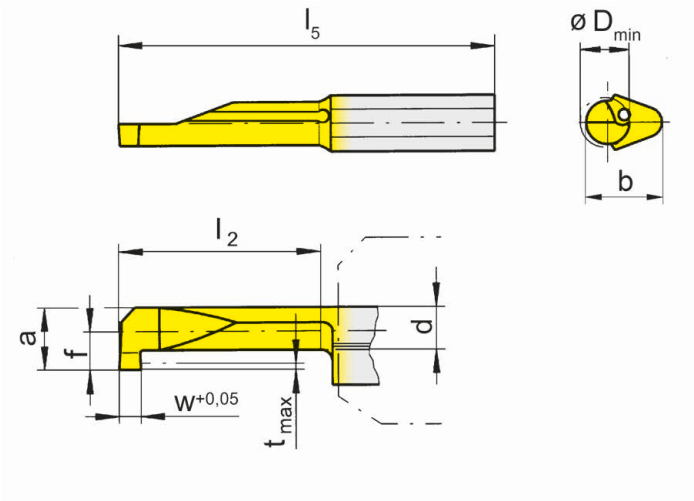

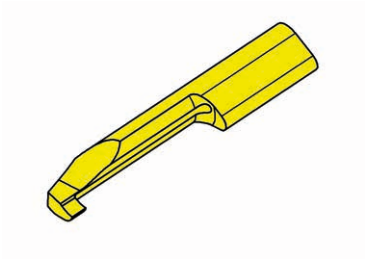

R=右手型-如图
R = right hand version shown

L=左手型
L = left hand version

▲ 库存
on stock

硬质合金牌号
Carbide grades

Δ 4周
4 weeks

产品型号 Part number	w	f	a	d	b	l_2	l_5	t_{max}	D_{min}	HIS		EG35	TH35	TN35
R105.0100.4.5	1	2.3	4.7	3.5	7	25	40	1	5	105125		▲	Δ	▲
R105.0150.4.5	1.5	2.3	4.7	3.5	7	25	40	1	5	105125			▲	▲
R105.0200.4.5	2	2.3	4.7	3.5	7	25	40	1	5	105125		▲	▲	▲
R105.0100.5.5	1	2.3	4.7	3.5	7	30	45	1	5	105125		▲	▲	▲
R105.0150.5.5	1.5	2.3	4.7	3.5	7	30	45	1	5	105125		Δ	▲	▲
R105.0200.5.5	2	2.3	4.7	3.5	7	30	45	1	5	105125		Δ	▲	▲
L105.0100.4.5	1	2.3	4.7	3.5	7	25	40	1	5	105125		Δ	Δ	Δ
L105.0150.4.5	1.5	2.3	4.7	3.5	7	25	40	1	5	105125		Δ	Δ	Δ
L105.0200.4.5	2	2.3	4.7	3.5	7	25	40	1	5	105125		Δ	Δ	Δ
L105.0100.5.5	1	2.3	4.7	3.5	7	30	45	1	5	105125		Δ	Δ	Δ
L105.0150.5.5	1.5	2.3	4.7	3.5	7	30	45	1	5	105125		Δ	Δ	Δ
L105.0200.5.5	2	2.3	4.7	3.5	7	30	45	1	5	105125		Δ	Δ	Δ
											P	●	●	●
											M	●	●	●
											K	o	●	●
											N	-	●	●
											S	-	●	●
											H	-	-	-

刀片
Insert

105

Ø ≥ 6 mm

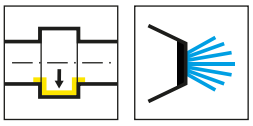

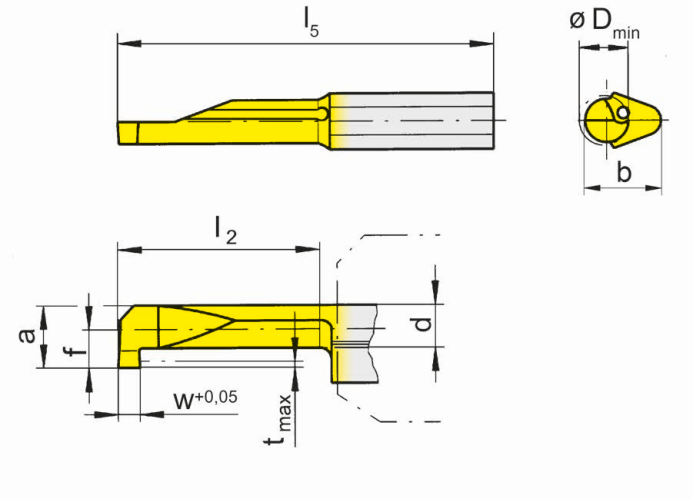

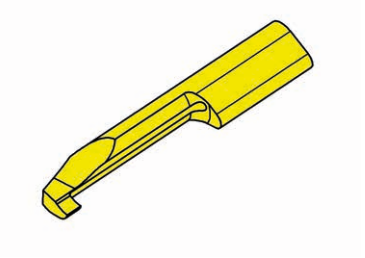

R=右手型-如图
R = right hand version shown

L=左手型
L = left hand version

▲ 库存
on stock

硬质合金牌号
Carbide grades

Δ 4周
4 weeks

产品型号 Part number	w	f	a	d	b	l_2	l_5	t_{max}	D_{min}	HIS	MG12	EG35	TH35	TN35
R105.0100.1.6	1	3.3	5.7	3.7	7	10	25	1.8	6	105125	▲	▲	▲	▲
R105.0150.1.6	1.5	3.3	5.7	3.7	7	10	25	1.8	6	105125	▲	▲	▲	▲
R105.0200.1.6	2	3.3	5.7	3.7	7	10	25	1.8	6	105125	▲	▲	▲	▲
R105.0100.2.6	1	3.3	5.7	3.7	7	15	30	1.8	6	105125	▲	▲	▲	▲
R105.0150.2.6	1.5	3.3	5.7	3.7	7	15	30	1.8	6	105125	▲	▲	▲	▲
R105.0200.2.6	2	3.3	5.7	3.7	7	15	30	1.8	6	105125	▲	▲	▲	▲
R105.0100.3.6	1	3.3	5.7	3.7	7	20	35	1.8	6	105125	▲	▲	▲	▲
R105.0150.3.6	1.5	3.3	5.7	3.7	7	20	35	1.8	6	105125	▲	▲	▲	▲
R105.0200.3.6	2	3.3	5.7	3.7	7	20	35	1.8	6	105125	▲	▲	▲	▲
L105.0100.1.6	1	3.3	5.7	3.7	7	10	25	1.8	6	105125	▲	▲	▲	▲
L105.0150.1.6	1.5	3.3	5.7	3.7	7	10	25	1.8	6	105125	Δ	▲	▲	▲
L105.0200.1.6	2	3.3	5.7	3.7	7	10	25	1.8	6	105125	Δ		▲	▲
L105.0100.2.6	1	3.3	5.7	3.7	7	15	30	1.8	6	105125	Δ	Δ	▲	▲
L105.0150.2.6	1.5	3.3	5.7	3.7	7	15	30	1.8	6	105125	Δ	▲	▲	▲
L105.0200.2.6	2	3.3	5.7	3.7	7	15	30	1.8	6	105125	Δ	▲	▲	▲
L105.0100.3.6	1	3.3	5.7	3.7	7	20	35	1.8	6	105125	Δ	Δ	▲	▲
L105.0150.3.6	1.5	3.3	5.7	3.7	7	20	35	1.8	6	105125	Δ	Δ	▲	▲
L105.0200.3.6	2	3.3	5.7	3.7	7	20	35	1.8	6	105125	Δ	▲	▲	▲

P	o	●	●	●
M	-	●	●	●
K	-	o	●	●
N	-	-	●	●
S	-	-	●	●
H	-	-	-	-

刀片
Insert

105

Ø ≥ 6 mm

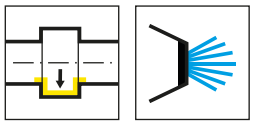

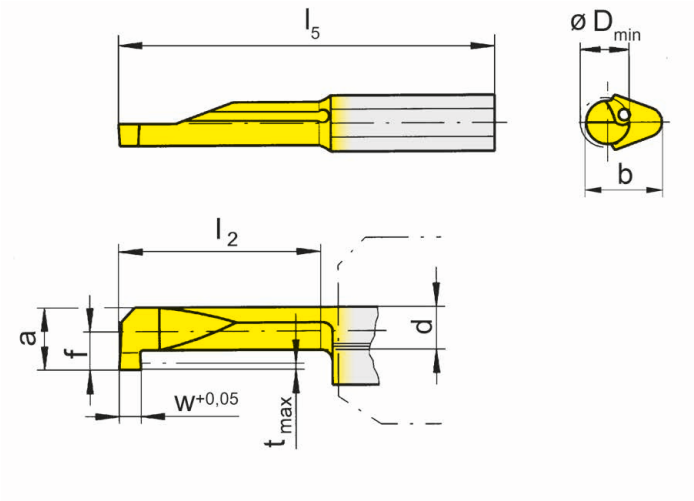

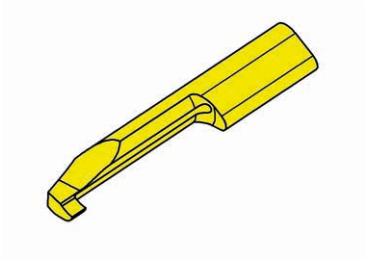

R=右手型-如图
R = right hand version shown

L=左手型
L = left hand version

▲ 库存
on stock

硬质合金牌号
Carbide grades

Δ 4周
4 weeks

产品型号 Part number	w	f	a	d	b	l_2	l_5	t_{max}	D_{min}	HIS		EG35	TH35	TN35
R105.0100.4.6	1	3.3	5.7	3.7	7	25	40	1.8	6	105125		▲	▲	▲
R105.0150.4.6	1.5	3.3	5.7	3.7	7	25	40	1.8	6	105125		▲	▲	▲
R105.0200.4.6	2	3.3	5.7	3.7	7	25	40	1.8	6	105125		▲	▲	▲
R105.0100.5.6	1	3.3	5.7	3.7	7	30	45	1.8	6	105125		▲	▲	▲
R105.0150.5.6	1.5	3.3	5.7	3.7	7	30	45	1.8	6	105125		▲	▲	▲
R105.0200.5.6	2	3.3	5.7	3.7	7	30	45	1.8	6	105125		▲	▲	▲
L105.0100.4.6	1	3.3	5.7	3.7	7	25	40	1.8	6	105125		Δ	▲	Δ
L105.0150.4.6	1.5	3.3	5.7	3.7	7	25	40	1.8	6	105125		Δ	Δ	▲
L105.0200.4.6	2	3.3	5.7	3.7	7	25	40	1.8	6	105125			Δ	▲
L105.0100.5.6	1	3.3	5.7	3.7	7	30	45	1.8	6	105125		Δ	Δ	Δ
L105.0150.5.6	1.5	3.3	5.7	3.7	7	30	45	1.8	6	105125		Δ	Δ	▲
L105.0200.5.6	2	3.3	5.7	3.7	7	30	45	1.8	6	105125		Δ	Δ	▲
											P	●	●	●
											M	●	●	●
											K	o	●	●
											N	-	●	●
											S	-	●	●
											H	-	-	-

刀片
Insert

105

Ø ≥ 6.8 mm

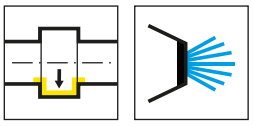

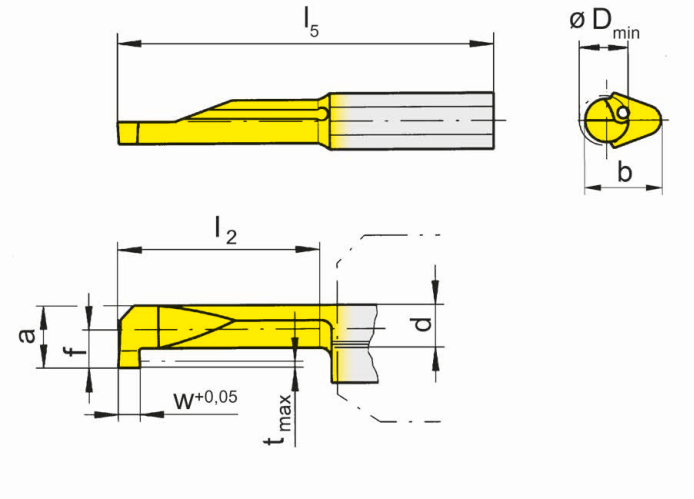

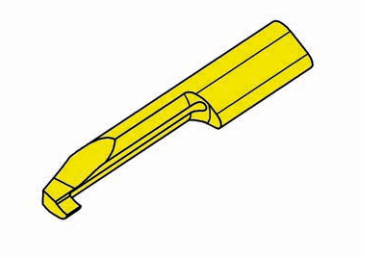

R=右手型-如图
R = right hand version shown

L=左手型
L = left hand version

▲ 库存
on stock

Δ 4周
4 weeks

硬质合金牌号
Carbide grades

产品型号 Part number	w	f	a	d	b	l_2	l_5	t_{max}	D_{min}	HIS		MG12	EG35	TH35	TN35
R105.0100.1.7	1	4	6.4	3.7	7	10	25	2.5	6.8	105125		▲	▲	▲	▲
R105.0150.1.7	1.5	4	6.4	3.7	7	10	25	2.5	6.8	105125		▲	▲	▲	▲
R105.0200.1.7	2	4	6.4	3.7	7	10	25	2.5	6.8	105125		▲	▲	▲	▲
R105.0100.2.7	1	4	6.4	3.7	7	15	30	2.5	6.8	105125		▲	▲	▲	▲
R105.0150.2.7	1.5	4	6.4	3.7	7	15	30	2.5	6.8	105125		▲	▲	▲	▲
R105.0200.2.7	2	4	6.4	3.7	7	15	30	2.5	6.8	105125		▲	▲	▲	▲
R105.0100.3.7	1	4	6.4	3.7	7	20	35	2.5	6.8	105125		▲	▲	▲	▲
R105.0150.3.7	1.5	4	6.4	3.7	7	20	35	2.5	6.8	105125		▲	▲	▲	▲
R105.0200.3.7	2	4	6.4	3.7	7	20	35	2.5	6.8	105125		▲	▲	▲	▲
L105.0100.1.7	1	4	6.4	3.7	7	10	25	2.5	6.8	105125		▲	Δ	▲	▲
L105.0150.1.7	1.5	4	6.4	3.7	7	10	25	2.5	6.8	105125		▲	▲	▲	▲
L105.0200.1.7	2	4	6.4	3.7	7	10	25	2.5	6.8	105125		▲	▲	▲	▲
L105.0100.2.7	1	4	6.4	3.7	7	15	30	2.5	6.8	105125		Δ		▲	▲
L105.0150.2.7	1.5	4	6.4	3.7	7	15	30	2.5	6.8	105125		▲		▲	▲
L105.0200.2.7	2	4	6.4	3.7	7	15	30	2.5	6.8	105125		▲	Δ	▲	▲
L105.0100.3.7	1	4	6.4	3.7	7	20	35	2.5	6.8	105125		▲	▲	▲	▲
L105.0150.3.7	1.5	4	6.4	3.7	7	20	35	2.5	6.8	105125		Δ	▲	▲	▲
L105.0200.3.7	2	4	6.4	3.7	7	20	35	2.5	6.8	105125		Δ	Δ	▲	▲
											P	o	●	●	●
											M	-	●	●	●
											K	-	o	●	●
											N	-	-	●	●
											S	-	-	●	●
											H	-	-	-	-

刀片
Insert

105

Ø ≥ 6.8 mm

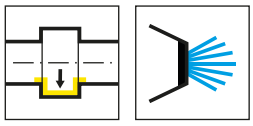

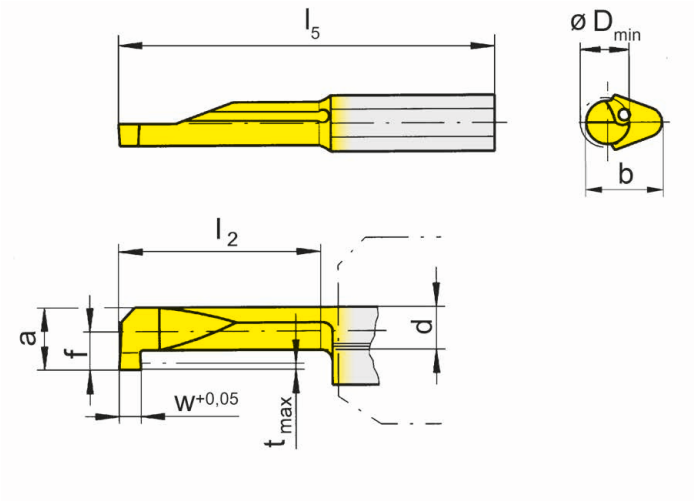

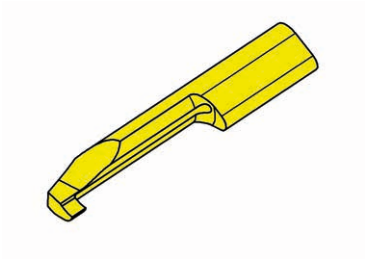

R=右手型-如图
R = right hand version shown

L=左手型
L = left hand version

▲ 库存
on stock

硬质合金牌号
Carbide grades

Δ 4周
4 weeks

产品型号 Part number	w	f	a	d	b	l_2	l_5	t_{max}	D_{min}	HIS		EG35	TH35	TN35
R105.0100.4.7	1	4	6.4	3.7	7	25	40	2.5	6.8	105125		▲	▲	▲
R105.0150.4.7	1.5	4	6.4	3.7	7	25	40	2.5	6.8	105125		▲	▲	▲
R105.0200.4.7	2	4	6.4	3.7	7	25	40	2.5	6.8	105125		▲	▲	▲
R105.0100.5.7	1	4	6.4	3.7	7	30	45	2.5	6.8	105125		Δ	▲	▲
R105.0150.5.7	1.5	4	6.4	3.7	7	30	45	2.5	6.8	105125		▲	▲	▲
R105.0200.5.7	2	4	6.4	3.7	7	30	45	2.5	6.8	105125		▲	▲	▲
L105.0100.4.7	1	4	6.4	3.7	7	25	40	2.5	6.8	105125		Δ	Δ	▲
L105.0150.4.7	1.5	4	6.4	3.7	7	25	40	2.5	6.8	105125		Δ	▲	▲
L105.0200.4.7	2	4	6.4	3.7	7	25	40	2.5	6.8	105125		Δ	▲	▲
L105.0100.5.7	1	4	6.4	3.7	7	30	45	2.5	6.8	105125		Δ	▲	▲
L105.0150.5.7	1.5	4	6.4	3.7	7	30	45	2.5	6.8	105125		Δ	▲	▲
L105.0200.5.7	2	4	6.4	3.7	7	30	45	2.5	6.8	105125		Δ	▲	▲
											P	●	●	●
											M	●	●	●
											K	o	●	●
											N	-	●	●
											S	-	●	●
											H	-	-	-

刀片
Insert

105

Ø ≥ 5 mm

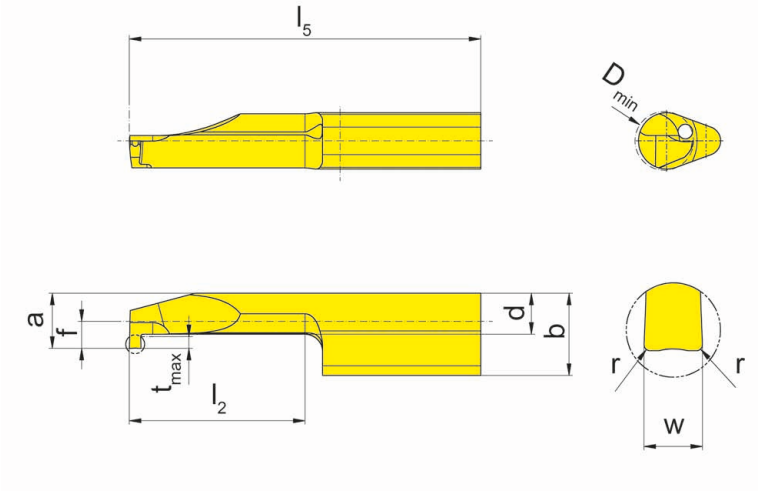

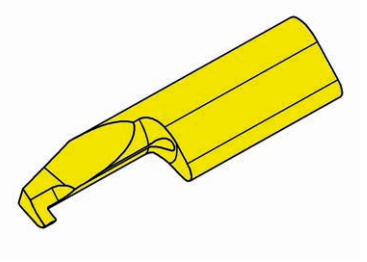

硬质合金牌号
Carbide grades

R=右手型-如图
R = right hand version shown

L=左手型
L = left hand version

▲ 库存
on stock

Δ 4周
4 weeks

产品型号 Part number	w	r	f	a	d	b	l_2	l_5	t_{max}	D_{min}	HIS		EG35
R105.FB10.1.01	1	0.1	2.3	4.7	3.5	7	10	25	1	5	105125		▲
R105.FB10.2.01	1	0.1	2.3	4.7	3.5	7	15	30	1	5	105125		▲
R105.FB15.1.01	1.5	0.1	2.3	4.7	3.5	7	10	25	1	5	105125		▲
R105.FB15.2.01	1.5	0.1	2.3	4.7	3.5	7	15	30	1	5	105125		▲
L105.FB10.1.01	1	0.1	2.3	4.7	3.5	7	10	25	1	5	105125		▲
L105.FB10.2.01	1	0.1	2.3	4.7	3.5	7	15	30	1	5	105125		▲
L105.FB15.1.01	1.5	0.1	2.3	4.7	3.5	7	10	25	1	5	105125		▲
L105.FB15.2.01	1.5	0.1	2.3	4.7	3.5	7	15	30	1	5	105125		▲
												P	●
												M	●
												K	o
												N	-
												S	-
												H	-

计算槽的最小可加工宽度 w_x
Calculation of the smallest possible width of groove w_x

例如 R105.FB10.01
Example

w_x = 2 x 槽宽 w - 2 x 刀尖圆角 R

w_x = 2 x Width of insert w - 2 x Corner radius insert R

w_x = 2 x 1 mm - 2 x 0.1 mm

w_x = 18 mm

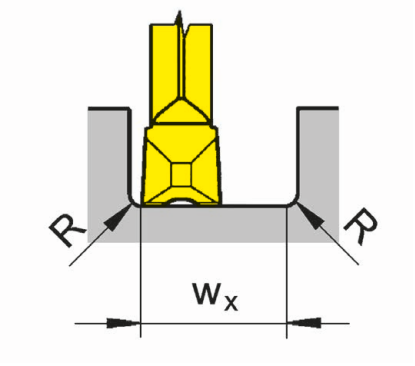

加工路径
Processing flow

刀片
Insert

105 Ø ≥ 3 mm

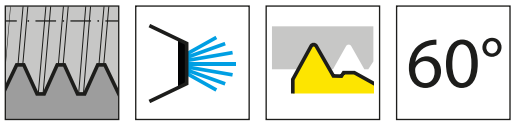

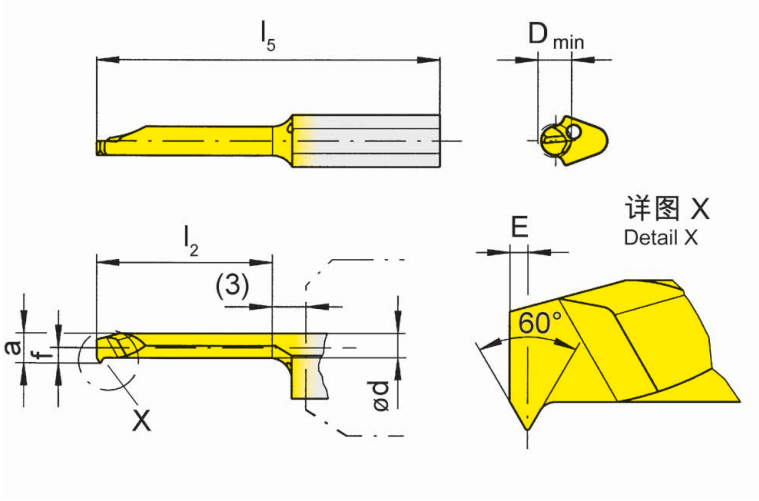

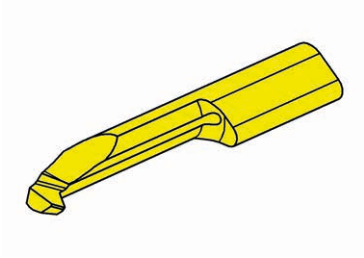

R=右手型-如图
R = right hand version shown

L=左手型
L = left hand version

▲ 库存
on stock

Δ 4周
4 weeks

硬质合金牌号
Carbide grades

产品型号 Part number	P	E	f	a	d	b	l_2	l_5	D_{min}	HIS		EG35	TN35
R105.0102.2.3	0.25	0.3	1.4	2.7	2.2	5.9	15	30	3	105123		Δ	▲
L105.0102.2.3	0.25	0.3	1.4	2.7	2.2	5.9	15	30	3	105123		Δ	▲
											P	●	●
											M	●	●
											K	o	●
											N	-	●
											S	-	●
											H	-	-

刀片
Insert

105

Ø ≥ 3 mm

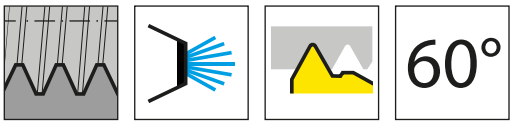

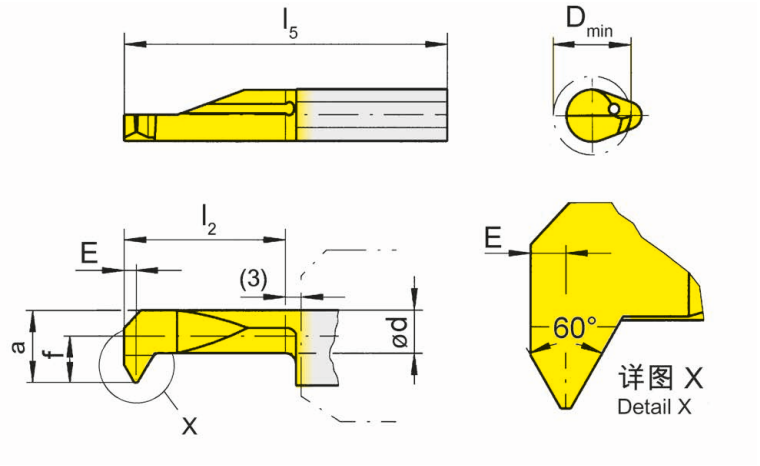

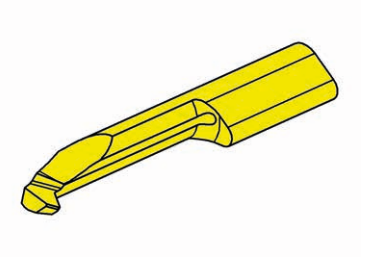

R=右手型-如图
R = right hand version shown

L=左手型
L = left hand version

▲ 库存
on stock

Δ 4周
4 weeks

硬质合金牌号
Carbide grades

产品型号 Part number	P	E	f	a	d	b	l_2	l_5	D_{min}	HIS		EG35	TN35
R105.0203.1.3	0.35	0.3	1.4	2.7	2.1	5.9	10	25	3	105123		▲	▲
R105.0203.2.5	0.35	0.3	2.3	4.7	3.5	7	15	30	5	105125		▲	▲
L105.0203.1.3	0.35	0.3	1.4	2.7	2.1	5.9	10	25	3	105123		Δ	Δ
L105.0203.2.5	0.35	0.3	2.3	4.7	3.5	7	15	30	5	105125			▲
											P	●	●
											M	●	●
											K	o	●
											N	-	●
											S	-	●
											H	-	-

刀片
Insert

105

Ø ≥ 3 mm

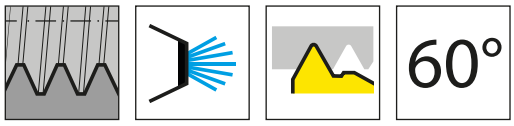

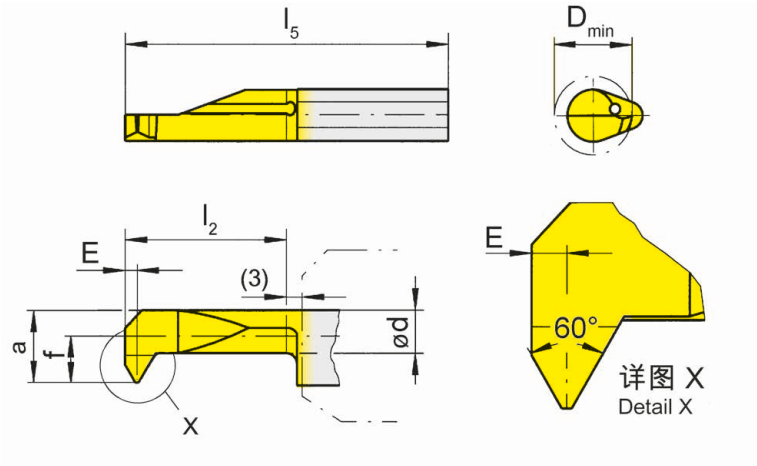

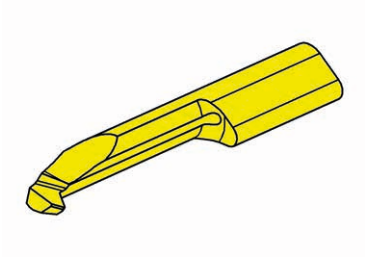

R=右手型-如图
R = right hand version shown

L=左手型
L = left hand version

▲ 库存
on stock

Δ 4周
4 weeks

硬质合金牌号
Carbide grades

产品型号 Part number	P	E	f	a	d	b	l_2	l_5	D_{min}	HIS	MG12	EG35	TH35	TN35
R105.0205.2.3	0.5	0.35	1.4	2.7	2.1	5.9	15	30	3	105123		▲		▲
R105.0205.2.4	0.5	0.35	1.9	3.7	2.7	6.4	15	30	4	105124		▲	▲	▲
R105.0205.3.4	0.5	0.35	1.9	3.7	2.7	6.4	20	35	4	105124		▲		▲
R105.0205.2.5	0.5	0.35	2.3	4.7	3.5	7	15	30	5	105125	▲	▲	▲	▲
R105.0205.3.5	0.5	0.35	2.3	4.7	3.5	7	20	35	5	105125		Δ		▲
R105.0205.4.5	0.5	0.35	2.3	4.7	3.5	7	25	40	5	105125				▲
R105.0205.3.6	0.5	0.35	3.3	5.7	4.8	7	20	35	6	105125		▲		▲
L105.0205.2.3	0.5	0.35	1.4	2.7	2.1	5.9	15	30	3	105123		Δ		▲
L105.0205.2.4	0.5	0.35	1.9	3.7	2.7	6.4	15	30	4	105124		Δ	Δ	▲
L105.0205.3.4	0.5	0.35	1.9	3.7	2.7	6.4	20	35	4	105124		Δ		Δ
L105.0205.2.5	0.5	0.35	2.3	4.7	3.5	7	15	30	5	105125	Δ	Δ	Δ	▲
L105.0205.3.5	0.5	0.35	2.3	4.7	3.5	7	20	35	5	105125		Δ		Δ
L105.0205.4.5	0.5	0.35	2.3	4.7	3.5	7	25	40	5	105125		Δ		Δ
L105.0205.3.6	0.5	0.35	3.3	5.7	4.8	7	20	35	6	105125		Δ		Δ

	MG12	EG35	TH35	TN35
P	o	●	●	●
M	-	●	●	●
K	-	o	●	●
N	-	-	●	●
S	-	-	●	●
H	-	-	-	-

刀片
Insert

105

Ø ≥ 3 mm

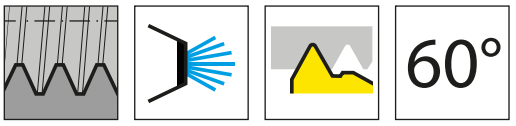

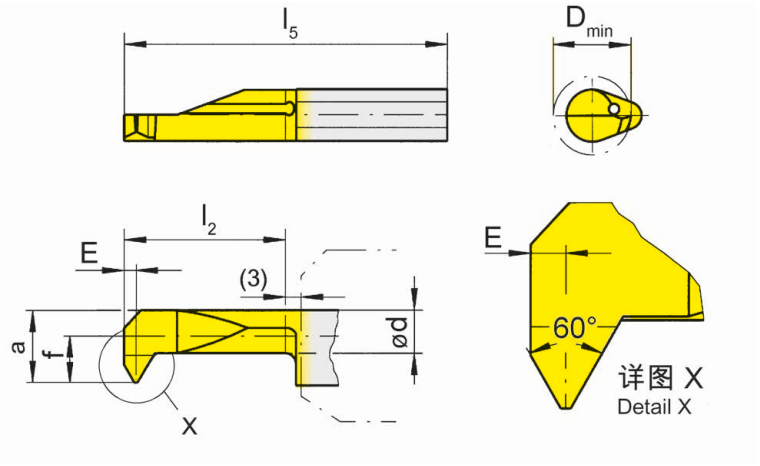

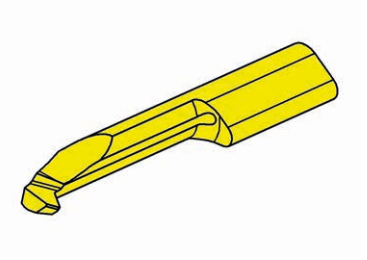

R=右手型-如图
R = right hand version shown

L=左手型
L = left hand version

▲ 库存
on stock

Δ 4周
4 weeks

硬质合金牌号
Carbide grades

产品型号 Part number	P	P_{max}	E	f	a	d	b	l_2	l_5	D_{min}	HIS	EG35	TH35	TN35
R105.0407.2.3	0.5	0.75	0.45	1.4	2.7	2	5.9	15	30	3	105123	▲		▲
R105.0407.1.4	0.5	0.75	0.45	1.9	3.7	2.7	6.4	10	25	4	105124	▲		▲
R105.0407.2.4	0.5	0.75	0.45	1.9	3.7	2.7	6.4	15	30	4	105124	▲		▲
R105.0407.3.4	0.5	0.75	0.45	1.9	3.7	2.7	6.4	20	35	4	105124	▲		▲
R105.0407.2.5	0.5	0.75	0.45	2.3	4.7	3.5	7	15	30	5	105125	▲	▲	▲
R105.0407.3.5	0.5	0.75	0.45	2.3	4.7	3.5	7	20	35	5	105125	Δ		▲
R105.0407.4.5	0.5	0.75	0.45	2.3	4.7	3.5	7	25	40	5	105125	▲		▲
R105.0407.3.6	0.5	0.75	0.45	3.3	5.7	4.7	7	20	35	6	105125	▲		▲
L105.0407.2.3	0.5	0.75	0.45	1.4	2.7	2	5.9	15	30	3	105123	Δ		Δ
L105.0407.1.4	0.5	0.75	0.45	1.9	3.7	2.7	6.4	10	25	4	105124	Δ		▲
L105.0407.2.4	0.5	0.75	0.45	1.9	3.7	2.7	6.4	15	30	4	105124	Δ		▲
L105.0407.3.4	0.5	0.75	0.45	1.9	3.7	2.7	6.4	20	35	4	105124	Δ		Δ
L105.0407.2.5	0.5	0.75	0.45	2.3	4.7	3.5	7	15	30	5	105125	▲	▲	▲
L105.0407.3.5	0.5	0.75	0.45	2.3	4.7	3.5	7	20	35	5	105125	Δ		Δ
L105.0407.4.5	0.5	0.75	0.45	2.3	4.7	3.5	7	25	40	5	105125	Δ		Δ
L105.0407.3.6	0.5	0.75	0.45	3.3	5.7	4.7	7	20	35	6	105125	Δ		Δ

	EG35	TH35	TN35
P	●	●	●
M	●	●	●
K	o	●	●
N	-	●	●
S	-	●	●
H	-	-	-

刀片
Insert

105

Ø ≥ 4.8 mm

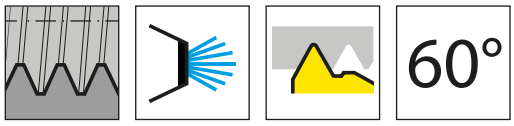

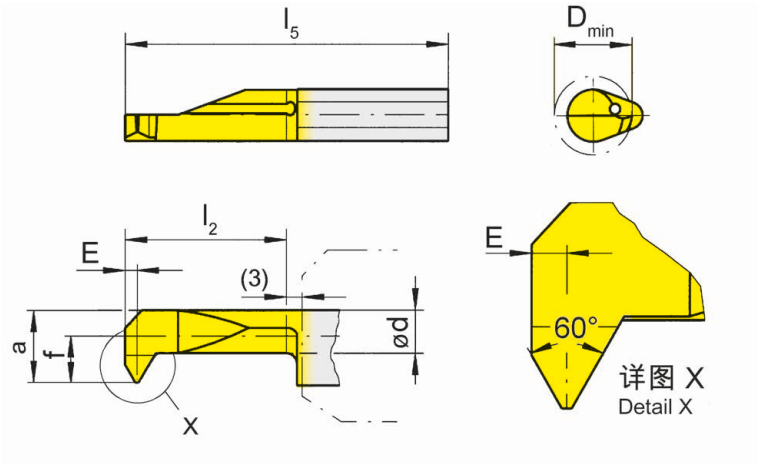

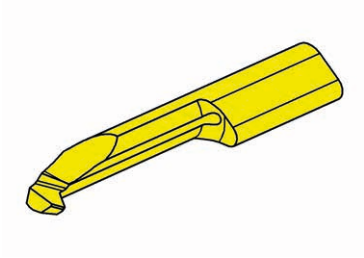

R=右手型-如图
R = right hand version shown

L=左手型
L = left hand version

▲ 库存
on stock

Δ 4周
4 weeks

硬质合金牌号
Carbide grades

产品型号 Part number	P	P_{max}	E	f	a	d	b	l_2	l_5	D_{min}	HIS	MG12	EG35	TF45	TH35	TI25	TN35
R105.0510.2.5	1	1	0.55	2.1	4.5	3.5	7	15	30	4.8	105125	▲	▲		▲	Δ	▲
R105.0510.3.5	1	1	0.55	2.1	4.5	3.5	7	20	35	4.8	105125		▲				▲
R105.0510.4.5	1	1	0.55	2.1	4.5	3.5	7	25	40	4.8	105125		▲				▲
R105.0510.2.6	1	1	0.55	3.3	5.7	3.7	7	15	30	6	105125		▲		▲		▲
R105.0612.2.6	1.25	1.25	0.65	3.3	5.7	3.7	7	15	30	6	105125	Δ	▲		▲		▲
R105.0612.3.6	1.25	1.25	0.65	3.3	5.7	3.7	7	20	35	6	105125		▲				▲
R105.0612.4.6	1.25	1.25	0.65	3.3	5.7	3.7	7	25	40	6	105125		▲				▲
R105.0815.2.7	1.5	1.5	0.75	4	6.4	3.7	7	15	30	7	105125		▲	Δ	▲		▲
R105.0815.3.7	1.5	1.5	0.75	4	6.4	3.7	7	20	35	7	105125		▲				▲
R105.0815.4.7	1.5	1.5	0.75	4	6.4	3.7	7	25	40	7	105125		▲				▲
L105.0510.2.5	1	1	0.55	2.1	4.5	3.5	7	15	30	4.8	105125	Δ	▲		▲		▲
L105.0510.3.5	1	1	0.55	2.1	4.5	3.5	7	20	35	4.8	105125		Δ				▲
L105.0510.4.5	1	1	0.55	2.1	4.5	3.5	7	25	40	4.8	105125		Δ				▲
L105.0510.2.6	1	1	0.55	3.3	5.7	3.7	7	15	30	6	105125		▲		▲		▲
L105.0612.2.6	1.25	1.25	0.65	3.3	5.7	3.7	7	15	30	6	105125	Δ	▲		▲		▲
L105.0612.3.6	1.25	1.25	0.65	3.3	5.7	3.7	7	20	35	6	105125		Δ				▲
L105.0612.4.6	1.25	1.25	0.65	3.3	5.7	3.7	7	25	40	6	105125		Δ				▲
L105.0815.2.7	1.5	1.5	0.75	4	6.4	3.7	7	15	30	7	105125				▲		▲
L105.0815.3.7	1.5	1.5	0.75	4	6.4	3.7	7	20	35	7	105125		Δ				▲
L105.0815.4.7	1.5	1.5	0.75	4	6.4	3.7	7	25	40	7	105125		Δ				▲

	MG12	EG35	TF45	TH35	TI25	TN35
P	o	●	●	●	●	●
M	-	●	●	●	●	●
K	-	o	●	●	●	●
N	-	-	●	●	●	●
S	-	-	●	●	●	●
H	-	-	-	-	-	-

刀片
Insert

105

Ø ≥ 2.4 mm

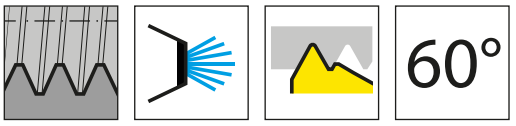

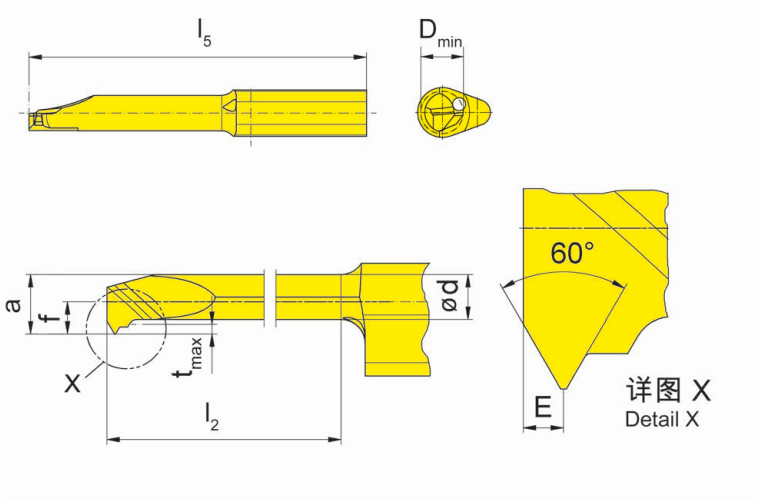

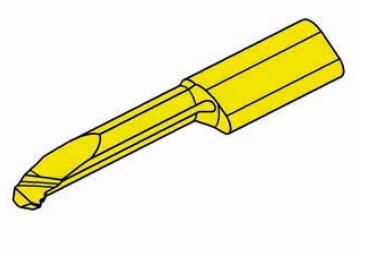

R=右手型-如图
R = right hand version shown

L=左手型
L = left hand version

▲ 库存
on stock

Δ 4周
4 weeks

产品型号 Part number	P	E	f	a	d	b	l_2	l_5	D_{min}	HIS	硬质合金牌号 Carbide grades EG35	TH35
R105.VPM3.2.3	0.5	0.3	1.4	2.2	1.65	5.9	9	25	2.4	105123	▲	▲
R105.VPM3.4.3	0.5	0.3	1.4	2.2	1.65	5.9	16	35	2.4	105123	▲	▲
R105.VPM4.2.4	0.7	0.4	1.5	2.9	2.1	6.4	15	30	3.2	105124	▲	▲
R105.VPM4.3.4	0.7	0.4	1.5	2.9	2.1	6.4	20	35	3.2	105124	▲	▲
R105.VPM5.2.5	0.8	0.5	2	3.7	2.8	7	15	30	4.1	105125	▲	▲
R105.VPM5.4.5	0.8	0.5	2	3.7	2.8	7	25	40	4.1	105125	▲	▲
R105.VPM6.3.6	1	0.5	2.4	4.5	3.4	7	20	35	4.9	105125	▲	▲
R105.VPM6.4.6	1	0.5	2.4	4.5	3.4	7	25	40	4.9	105125	▲	▲
R105.VPM6.5.6	1	0.5	2.4	4.5	3.4	7	30	45	4.9	105125	▲	▲
R105.VPM8.3.8	1.25	0.7	3.8	6.2	4.7	7	20	35	6.6	105125	▲	▲
R105.VPM8.5.8	1.25	0.7	3.8	6.2	4.7	7	30	45	6.6	105125	▲	▲
L105.VPM3.2.3	0.5	0.3	1.4	2.2	1.65	5.9	9	25	2.4	105123	Δ	▲
L105.VPM3.4.3	0.5	0.3	1.4	2.2	1.65	5.9	16	35	2.4	105123	Δ	Δ
L105.VPM4.2.4	0.7	0.4	1.5	2.9	2.1	6.4	15	30	3.2	105124	Δ	Δ
L105.VPM4.3.4	0.7	0.4	1.5	2.9	2.1	6.4	20	35	3.2	105124	Δ	Δ
L105.VPM5.2.5	0.8	0.5	2	3.7	2.8	7	15	30	4.1	105125	Δ	▲
L105.VPM5.4.5	0.8	0.5	2	3.7	2.8	7	25	40	4.1	105125	Δ	▲
L105.VPM6.3.6	1	0.5	2.4	4.5	3.4	7	20	35	4.9	105125	▲	▲
L105.VPM6.4.6	1	0.5	2.4	4.5	3.4	7	25	40	4.9	105125	Δ	Δ
L105.VPM6.5.6	1	0.5	2.4	4.5	3.4	7	30	45	4.9	105125	Δ	▲
L105.VPM8.3.8	1.25	0.7	3.8	6.2	4.7	7	20	35	6.6	105125	Δ	▲
L105.VPM8.5.8	1.25	0.7	3.8	6.2	4.7	7	30	45	6.6	105125	Δ	▲

	EG35	TH35
P	●	●
M	●	●
K	o	●
N	-	●
S	-	●
H	-	-

刀片
Insert

105 Ø ≥ 4 mm

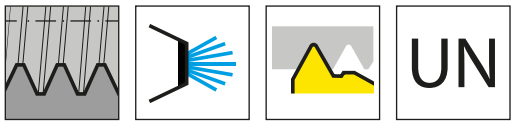

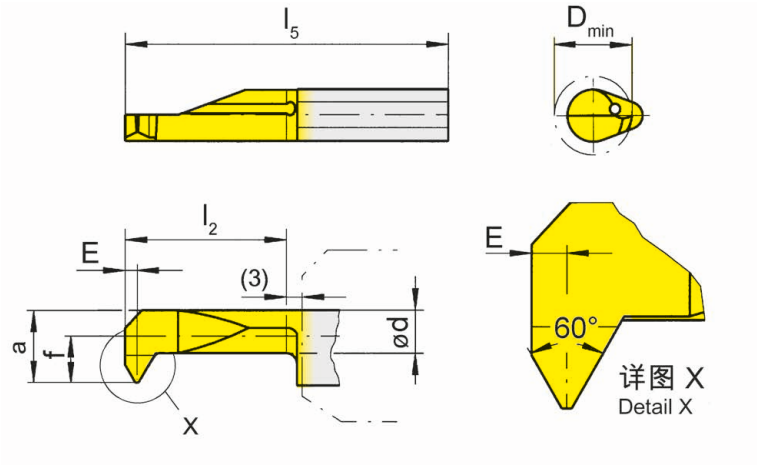

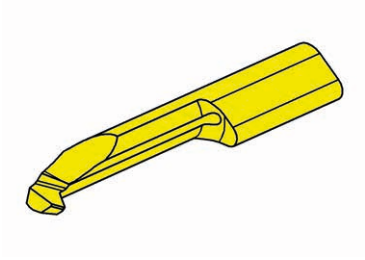

R=右手型-如图
R = right hand version shown

L=左手型
L = left hand version

▲ 库存
on stock

Δ 4周
4 weeks

硬质合金牌号
Carbide grades

产品型号 Part number	TPI_{min}	TPI_{max}	E	f	a	d	b	l_2	l_5	D_{min}	HIS		MG12	EG35	TF45	TH35	TI25	TN35
R105.3240.2.4	32	40	0.45	1.9	3.7	2.7	6.4	15	30	4	105124			▲			Δ	▲
R105.1620.2.5	16	20	0.7	2.3	4.7	3.3	7	15	30	5	105125			▲		▲		
R105.1620.3.5	16	20	0.7	2.3	4.7	3.3	7	20	35	5	105125			Δ		▲		
R105.2428.2.5	24	28	0.55	2.3	4.7	3.5	7	15	30	5	105125			▲			Δ	▲
R105.3240.2.5	32	40	0.45	2.3	4.7	3.5	7	15	30	5	105125			▲	Δ		Δ	▲
R105.1620.2.6	16	20	0.7	3.3	5.7	3.7	7	15	30	6	105125			▲	Δ	Δ	Δ	▲
R105.1620.3.6	16	20	0.7	3.3	5.7	3.7	7	20	35	6	105125			▲				▲
R105.1620.4.6	16	20	0.7	3.3	5.7	3.7	7	25	40	6	105125			▲				▲
R105.2428.2.6	24	28	0.55	3.3	5.7	3.7	7	15	30	6	105125		Δ	▲			Δ	▲
R105.2428.3.6	24	28	0.55	3.3	5.7	3.7	7	20	35	6	105125			▲				▲
R105.2428.4.6	24	28	0.55	3.3	5.7	3.7	7	25	40	6	105125			▲				▲
L105.3240.2.4	32	40	0.45	1.9	3.7	2.7	6.4	15	30	4	105124			Δ				▲
L105.1620.2.5	16	20	0.7	2.3	4.7	3.3	7	15	30	5	105125			Δ		▲		
L105.1620.3.5	16	20	0.7	2.3	4.7	3.3	7	20	35	5	105125			Δ		Δ		
L105.2428.2.5	24	28	0.55	2.3	4.7	3.5	7	15	30	5	105125			Δ				▲
L105.3240.2.5	32	40	0.45	2.3	4.7	3.5	7	15	30	5	105125			Δ				▲
L105.1620.2.6	16	20	0.7	3.3	5.7	3.7	7	15	30	6	105125			Δ				▲
L105.1620.3.6	16	20	0.7	3.3	5.7	3.7	7	20	35	6	105125			Δ				Δ
L105.1620.4.6	16	20	0.7	3.3	5.7	3.7	7	25	40	6	105125			Δ				Δ
L105.2428.2.6	24	28	0.55	3.3	5.7	3.7	7	15	30	6	105125			▲				▲
L105.2428.3.6	24	28	0.55	3.3	5.7	3.7	7	20	35	6	105125			Δ				Δ
L105.2428.4.6	24	28	0.55	3.3	5.7	3.7	7	25	40	6	105125			Δ				▲
												P	o	●	●	●	●	●
												M	-	●	●	●	●	●
												K	-	o	●	●	●	●
												N	-	-	●	●	●	●
												S	-	-	●	●	●	●
												H	-	-	-	-	-	-

刀片
Insert

105

Ø ≥ 4 mm

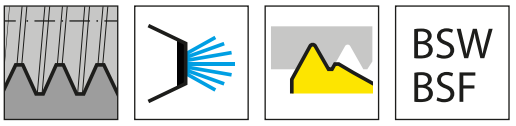

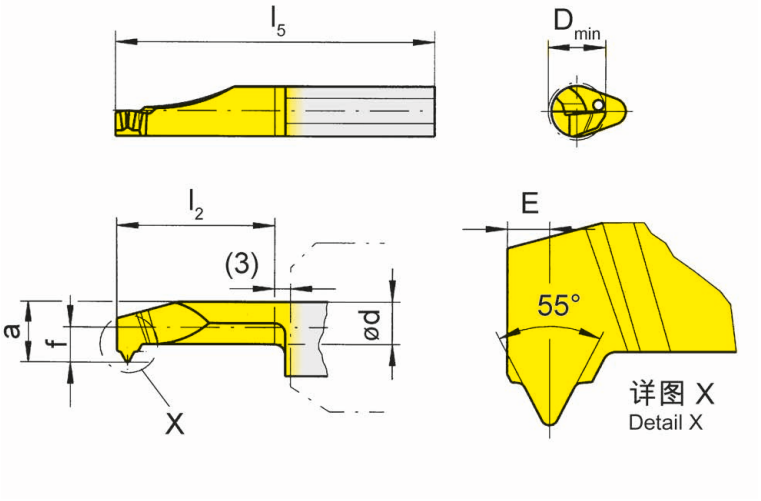

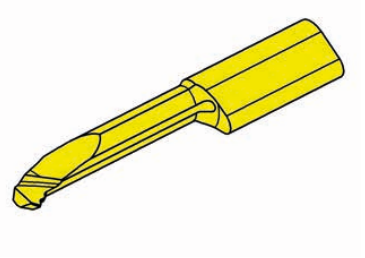

R=右手型-如图
R = right hand version shown

L=左手型
L = left hand version

▲ 库存
on stock

Δ 4周
4 weeks

硬质合金牌号
Carbide grades

产品型号 Part number	TPI	E	f	a	d	b	l_2	l_5	D_{min}	HIS		EG35	TN35
R105.5520.2.4	20	1	1.9	3.7	2.5	6.4	15	30	4	105124		▲	▲
R105.5524.2.5	24	0.8	2.3	4.7	3.5	7	15	30	5	105125		Δ	Δ
R105.5526.2.5	26	0.8	2.3	4.7	3.5	7	15	30	5	105125			▲
R105.5528.2.5	28	0.8	2.3	4.7	3.5	7	15	30	5	105125		▲	▲
L105.5524.2.5	24	0.8	2.3	4.7	3.5	7	15	30	5	105125		Δ	Δ
L105.5526.2.5	26	0.8	2.3	4.7	3.5	7	15	30	5	105125		Δ	Δ
L105.5528.2.5	28	0.8	2.3	4.7	3.5	7	15	30	5	105125		Δ	Δ
											P	●	●
											M	●	●
											K	o	●
											N	-	●
											S	-	●
											H	-	-

刀片
Insert

105

Ø ≥ 6 mm

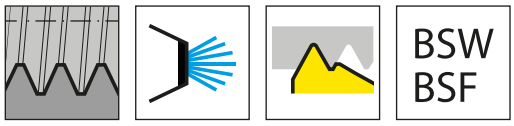

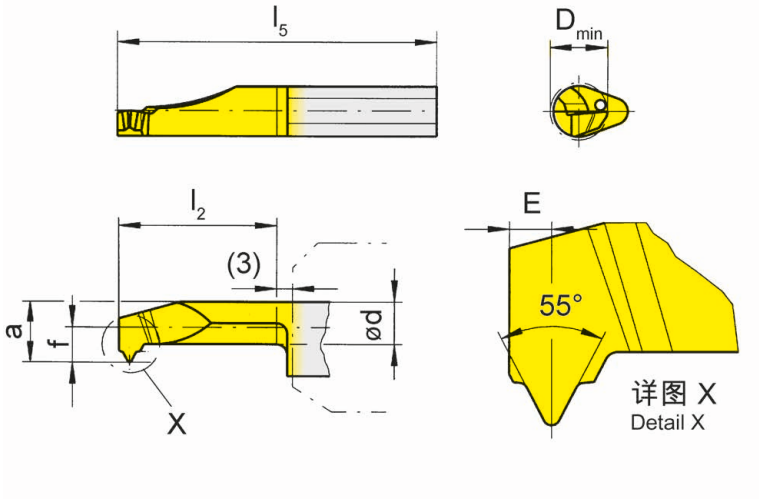

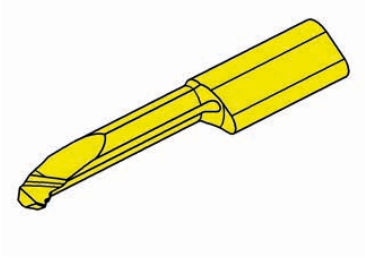

硬质合金牌号
Carbide grades

R=右手型-如图
R = right hand version shown

L=左手型
L = left hand version

▲ 库存
on stock

Δ 4周
4 weeks

产品型号 Part number	TPI	E	f	a	d	b	l_2	l_5	D_{min}	HIS	EG35	TH35	TN35
R105.5524.2.6	24	0.8	3.3	5.7	3.7	7	15	30	6	105125	Δ		Δ
R105.5526.2.6	26	0.8	3.3	5.7	3.7	7	15	30	6	105125	Δ		▲
R105.5528.2.6	28	0.8	3.3	5.7	3.7	7	15	30	6	105125	▲		▲
R105.5519.2.6	19	1	3.3	5.7	3.7	7	15	30	6	105125	▲	Δ	▲
R105.5520.2.6	20	1	3.3	5.7	3.7	7	15	30	6	105125	Δ		▲
R105.5522.2.6	22	1	3.3	5.7	3.7	7	15	30	6	105125	Δ		Δ
R105.5524.3.6	24	0.8	3.3	5.7	3.7	7	20	35	6	105125	▲		Δ
R105.5526.3.6	26	0.8	3.3	5.7	3.7	7	20	35	6	105125	Δ		Δ
R105.5528.3.6	28	0.8	3.3	5.7	3.7	7	20	35	6	105125	▲		▲
R105.5519.3.6	19	1	3.3	5.7	3.7	7	20	35	6	105125	▲		▲
R105.5522.3.6	22	1	3.3	5.7	3.7	7	20	35	6	105125	Δ		Δ
L105.5524.2.6	24	0.8	3.3	5.7	3.7	7	15	30	6	105125	Δ		Δ
L105.5526.2.6	26	0.8	3.3	5.7	3.7	7	15	30	6	105125	Δ		Δ
L105.5528.2.6	28	0.8	3.3	5.7	3.7	7	15	30	6	105125	Δ		Δ
L105.5519.2.6	19	1	3.3	5.7	3.7	7	15	30	6	105125	Δ		▲
L105.5520.2.6	20	1	3.3	5.7	3.7	7	15	30	6	105125	Δ		Δ
L105.5522.2.6	22	1	3.3	5.7	3.7	7	15	30	6	105125	Δ		Δ
L105.5528.3.6	28	0.8	3.3	5.7	3.7	7	20	35	6	105125	Δ		Δ

	EG35	TH35	TN35
P	●	●	●
M	●	●	●
K	o	●	●
N	-	●	●
S	-	●	●
H	-	-	-

刀片
Insert

105

Ø ≥ 6 mm

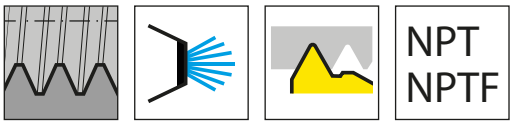

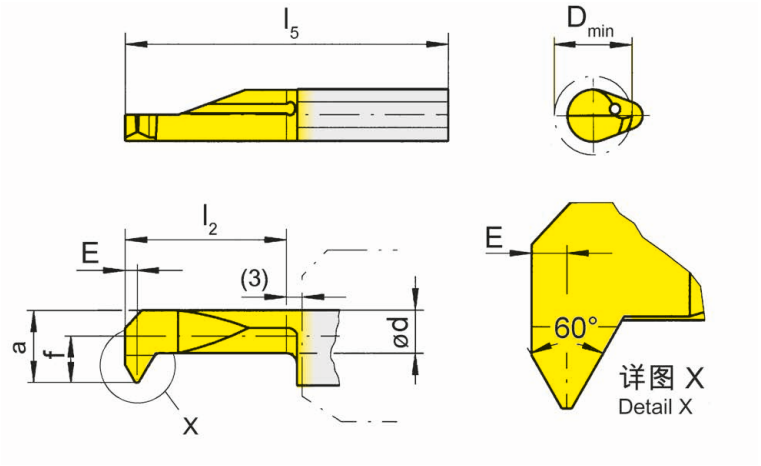

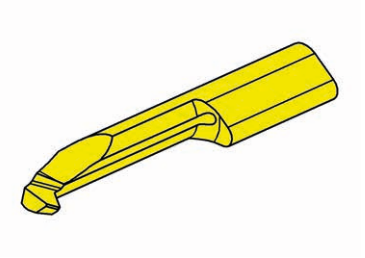

R=右手型-如图
R = right hand version shown

L=左手型
L = left hand version

硬质合金牌号
Carbide grades

▲ 库存
on stock

Δ 4周
4 weeks

产品型号 Part number	TPI	E	f	a	d	b	l_2	l_5	D_{min}	HIS		MG12	EG35	TH35	TI25	TN35
R105.NP18.2.6	18	1	3.3	5.7	3.7	7	15	30	6	105125		Δ	▲		Δ	▲
R105.NP18.3.6	18	1	3.3	5.7	3.7	7	20	35	6	105125			Δ	▲		▲
R105.NP18.4.6	18	1	3.3	5.7	3.7	7	25	40	6	105125			Δ	Δ		▲
R105.NP27.2.6	27	0.8	3.3	5.7	3.7	7	15	30	6	105125			▲		▲	▲
R105.NP27.3.6	27	0.8	3.3	5.7	3.7	7	20	35	6	105125			Δ	Δ	Δ	Δ
R105.NP27.4.6	27	0.8	3.3	5.7	3.7	7	25	40	6	105125			Δ	Δ		Δ
L105.NP18.2.6	18	1	3.3	5.7	3.7	7	15	30	6	105125			Δ		Δ	▲
L105.NP18.3.6	18	1	3.3	5.7	3.7	7	20	35	6	105125			Δ	Δ		Δ
L105.NP18.4.6	18	1	3.3	5.7	3.7	7	25	40	6	105125			Δ	Δ		Δ
L105.NP27.2.6	27	0.8	3.3	5.7	3.7	7	15	30	6	105125			Δ		Δ	▲
L105.NP27.3.6	27	0.8	3.3	5.7	3.7	7	20	35	6	105125			Δ	Δ	Δ	
L105.NP27.4.6	27	0.8	3.3	5.7	3.7	7	25	40	6	105125			Δ	Δ		Δ
											P	o	●	●	●	●
											M	-	●	●	●	●
											K	-	o	●	●	●
											N	-	-	●	●	●
											S	-	-	●	●	●
											H	-	-	-	-	-

刀片
Insert

105

Ø ≥ 3 mm

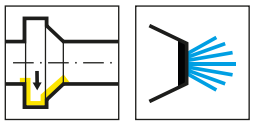

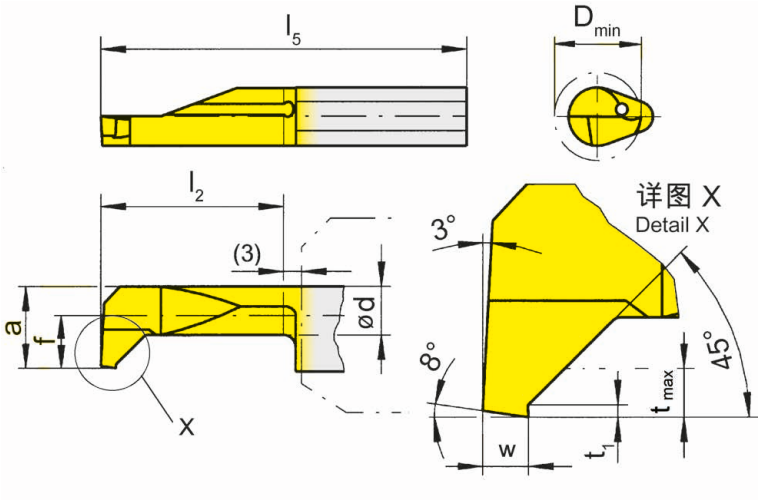

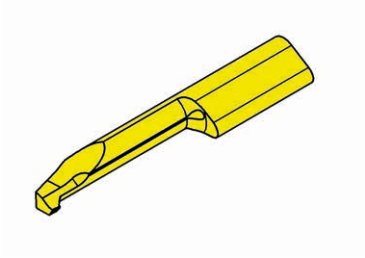

R=右手型-如图
R = right hand version shown

L=左手型
L = left hand version

硬质合金牌号
Carbide grades

▲ 库存
on stock

Δ 4周
4 weeks

产品型号 Part number	w	f	a	d	b	l_2	l_5	t_{max}	t_1	D_{min}	HIS	MG12	EG35	TI25	TN35
R105.0810.1.3	0.7	1.4	2.7	2	5.9	10	25	0.5	0.2	3	105123		▲		▲
R105.0810.2.3	0.7	1.4	2.7	2	5.9	15	30	0.5	0.2	3	105123		Δ		▲
R105.0810.1.4	1	1.9	3.7	2.7	6.4	10	25	0.7	0.2	4	105124		▲		▲
R105.0810.2.4	1	1.9	3.7	2.7	6.4	15	30	0.7	0.2	4	105124		▲		▲
R105.0810.3.4	1	1.9	3.7	2.7	6.4	20	35	0.7	0.2	4	105124		Δ		▲
R105.0810.2.5	1	2.3	4.7	3.5	7	15	30	0.7	0.2	5	105125	▲	▲		▲
R105.0810.3.5	1	2.3	4.7	3.5	7	20	35	0.7	0.2	5	105125		▲	▲	▲
R105.0810.4.5	1	2.3	4.7	3.5	7	25	40	0.7	0.2	5	105125		▲	▲	▲
R105.0810.5.5	1	2.3	4.7	3.5	7	30	45	0.7	0.2	5	105125		▲	▲	▲
R105.0810.5.6	1	3.1	5.5	4.2	7	30	45	1	0.2	6	105125		▲		▲
R105.0810.7.6	1	3.1	5.5	4.2	7	40	55	1	0.2	6	105125		Δ		▲
L105.0810.1.3	0.7	1.4	2.7	2	5.9	10	25	0.5	0.2	3	105123		Δ		▲
L105.0810.2.3	0.7	1.4	2.7	2	5.9	15	30	0.5	0.2	3	105123		Δ		▲
L105.0810.1.4	1	1.9	3.7	2.7	6.4	10	25	0.7	0.2	4	105124		Δ		Δ
L105.0810.2.4	1	1.9	3.7	2.7	6.4	15	30	0.7	0.2	4	105124		Δ		▲
L105.0810.3.4	1	1.9	3.7	2.7	6.4	20	35	0.7	0.2	4	105124		Δ		▲
L105.0810.2.5	1	2.3	4.7	3.5	7	15	30	0.7	0.2	5	105125	▲	▲		▲
L105.0810.3.5	1	2.3	4.7	3.5	7	20	35	0.7	0.2	5	105125		Δ	▲	▲
L105.0810.4.5	1	2.3	4.7	3.5	7	25	40	0.7	0.2	5	105125		Δ	▲	▲
L105.0810.5.5	1	2.3	4.7	3.5	7	30	45	0.7	0.2	5	105125		Δ	▲	Δ
L105.0810.5.6	1	3.1	5.5	4.2	7	30	45	1	0.2	6	105125		Δ		▲
L105.0810.7.6	1	3.1	5.5	4.2	7	40	55	1	0.2	6	105125		Δ		Δ

	MG12	EG35	TI25	TN35
P	o	●	●	●
M	-	●	●	●
K	-	o	●	●
N	-	-	●	●
S	-	-	●	●
H	-	-	-	-

刀片
Insert

105

Ø ≥ 5 mm

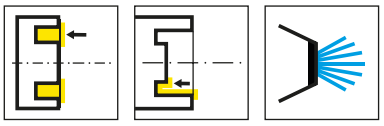

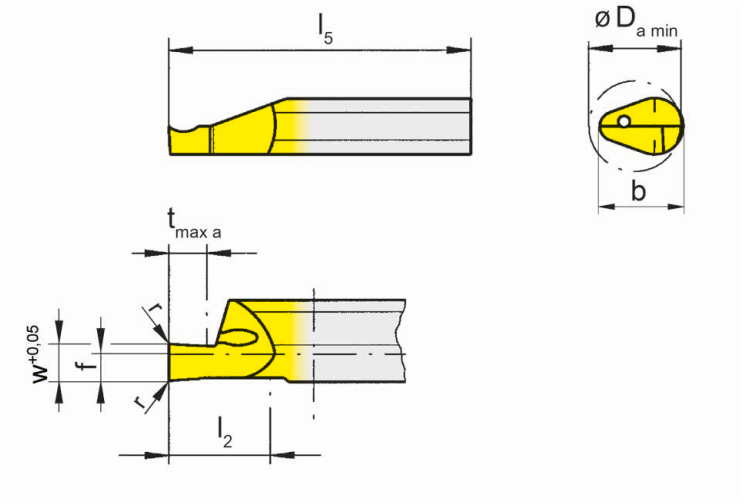

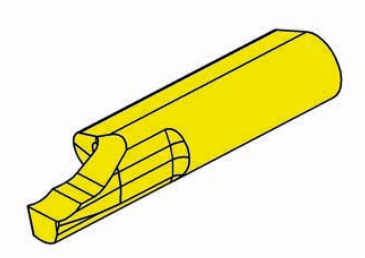

R=右手型-如图
R = right hand version shown

L=左手型
L = left hand version

硬质合金牌号
Carbide grades

▲ 库存
on stock

Δ 4周
4 weeks

产品型号 Part number	w	r	f	b	l_2	l_5	$t_{max\ a}$	$D_{a\ min}$	HIS		MG12	AN25	EG35	ES15	TI25
R105.0505.1.8	0.5	-	2	7	10	25	2	5	105125			▲	▲	▲	
R105.0510.1.8	1	0.05	2	7	10	25	2	5	105125		▲		▲		▲
R105.0515.1.8	1.5	0.05	2	7	10	25	3	5	105125		▲		▲		▲
R105.0520.1.8	2	0.05	2	7	10	25	5	5	105125		▲		▲		▲
R105.0510.2.8	1	0.05	2	7	15	35	2	5	105125		Δ		▲		▲
R105.0515.2.8	1.5	0.05	2	7	15	35	3	5	105125		Δ		▲		▲
R105.0520.2.8	2	0.05	2	7	15	35	5	5	105125		Δ		▲		▲
L105.0510.1.8	1	0.05	2	7	10	25	2	5	105125		▲		▲		▲
L105.0515.1.8	1.5	0.05	2	7	10	25	3	5	105125		▲		▲		▲
L105.0520.1.8	2	0.05	2	7	10	25	5	5	105125		Δ		▲		▲
L105.0510.2.8	1	0.05	2	7	15	35	2	5	105125		Δ		Δ		▲
L105.0515.2.8	1.5	0.05	2	7	15	35	3	5	105125		Δ		▲		▲
L105.0520.2.8	2	0.05	2	7	15	35	5	5	105125		Δ		▲		▲
										P	o	●	●	●	●
										M	-	o	●	●	●
										K	-	-	o	o	●
										N	-	-	-	-	●
										S	-	-	-	-	●
										H	-	-	-	-	-

刀片
Insert

105

Ø ≥ 6 mm

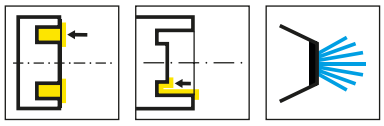

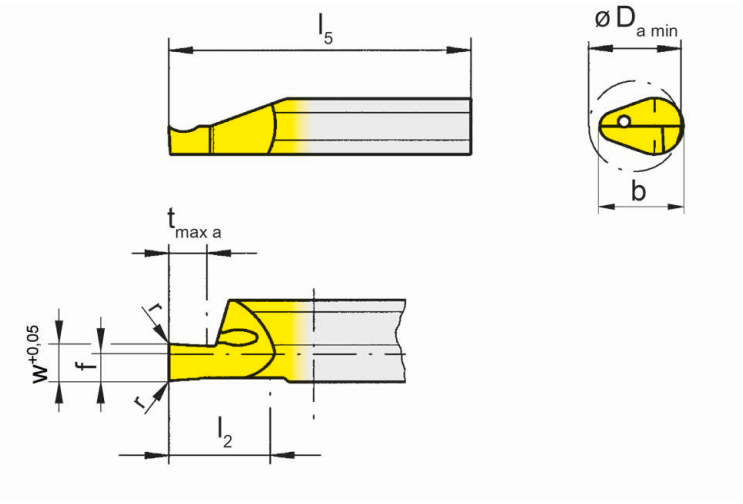

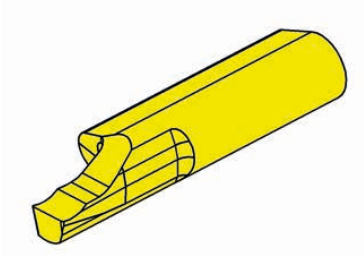

R=右手型-如图
R = right hand version shown

L=左手型
L = left hand version

▲ 库存
on stock

Δ 4周
4 weeks

硬质合金牌号
Carbide grades

产品型号 Part number	w	r	f	b	l_2	l_5	$t_{max\ a}$	$D_{a\ min}$	HIS		MG12	EG35	TI25
R105.0610.1.8	1	0.05	2	7	10	25	2	6	105125		▲	▲	▲
R105.0615.1.8	1.5	0.05	2	7	10	25	3	6	105125		▲	▲	▲
R105.0620.1.8	2	0.05	2	7	10	25	5	6	105125		▲	▲	▲
R105.0610.2.8	1	0.05	2	7	15	35	2	6	105125		▲	▲	▲
R105.0615.2.8	1.5	0.05	2	7	15	35	3	6	105125		▲	▲	▲
R105.0620.2.8	2	0.05	2	7	15	35	5	6	105125		▲	▲	▲
L105.0610.1.8	1	0.05	2	7	10	25	2	6	105125		Δ	▲	▲
L105.0615.1.8	1.5	0.05	2	7	10	25	3	6	105125		Δ	▲	▲
L105.0620.1.8	2	0.05	2	7	10	25	5	6	105125		Δ	▲	▲
L105.0610.2.8	1	0.05	2	7	15	35	2	6	105125		Δ	Δ	▲
L105.0615.2.8	1.5	0.05	2	7	15	35	3	6	105125		Δ	Δ	▲
L105.0620.2.8	2	0.05	2	7	15	35	5	6	105125		Δ	Δ	▲
										P	o	●	●
										M	-	●	●
										K	-	o	●
										N	-	-	●
										S	-	-	●
										H	-	-	-

刀片
Insert

105

Ø ≥ 8 mm

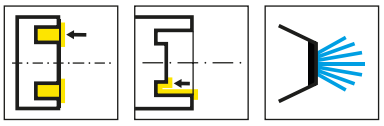

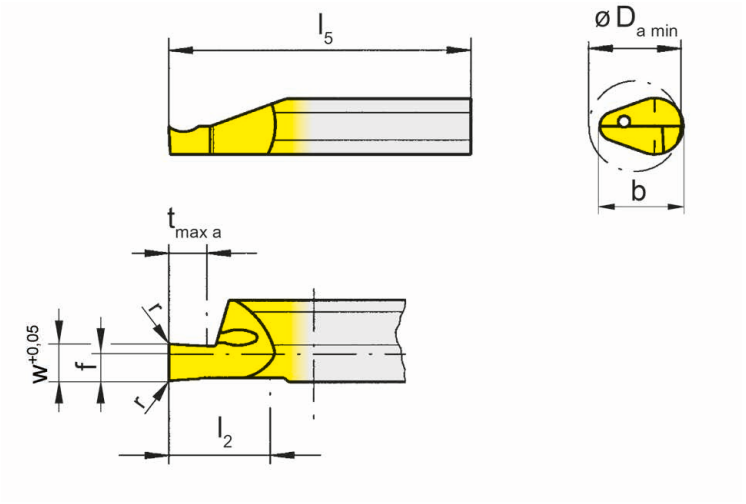

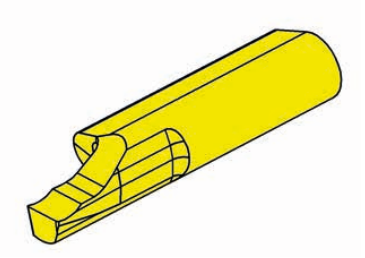

R=右手型-如图
R = right hand version shown

L=左手型
L = left hand version

▲ 库存
on stock

硬质合金牌号
Carbide grades

Δ 4周
4 weeks

产品型号 Part number	w	r	f	b	l_2	l_5	$t_{max\ a}$	$D_{a\ min}$	HIS		EG35	TI25
R105.0810.1.8	1	0.15	2	7	10	25	2	8	105125		▲	▲
R105.0815.1.8	1.5	0.15	2	7	10	25	3	8	105125		▲	▲
R105.0820.1.8	2	0.15	2	7	10	25	4	8	105125		▲	▲
R105.0825.1.8	2.5	0.15	2	7	10	25	5	8	105125		▲	▲
R105.0830.1.8	3	0.15	2	7	10	25	6	8	105125		▲	▲
R105.0810.2.8	1	0.15	2	7	15	35	2	8	105125		▲	▲
R105.0815.2.8	1.5	0.15	2	7	15	35	3	8	105125		▲	▲
R105.0820.2.8	2	0.15	2	7	15	35	4	8	105125		▲	▲
R105.0825.2.8	2.5	0.15	2	7	15	35	5	8	105125		▲	▲
R105.0830.2.8	3	0.15	2	7	15	35	6	8	105125		▲	▲
L105.0810.1.8	1	0.15	2	7	10	25	2	8	105125		▲	▲
L105.0815.1.8	1.5	0.15	2	7	10	25	3	8	105125		▲	▲
L105.0820.1.8	2	0.15	2	7	10	25	4	8	105125		▲	▲
L105.0825.1.8	2.5	0.15	2	7	10	25	5	8	105125		▲	▲
L105.0830.1.8	3	0.15	2	7	10	25	6	8	105125		▲	▲
L105.0810.2.8	1	0.15	2	7	15	35	2	8	105125		▲	▲
L105.0815.2.8	1.5	0.15	2	7	15	35	3	8	105125		▲	▲
L105.0820.2.8	2	0.15	2	7	15	35	4	8	105125		▲	▲
L105.0825.2.8	2.5	0.15	2	7	15	35	5	8	105125		▲	▲
L105.0830.2.8	3	0.15	2	7	15	35	6	8	105125		▲	▲
										P	●	●
										M	●	●
										K	o	●
										N	-	●
										S	-	●
										H	-	-

刀片
Insert

105

Ø ≥ 8 mm

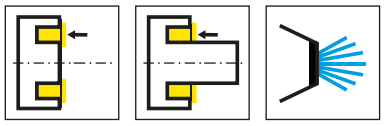

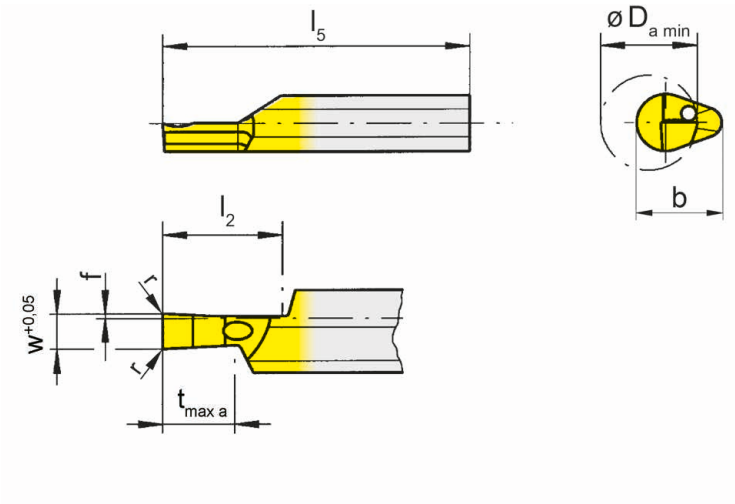

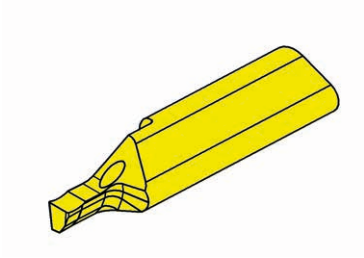

R=右手型-如图
R = right hand version shown

L=左手型
L = left hand version

▲ 库存
on stock

硬质合金牌号
Carbide grades

Δ 4周
4 weeks

产品型号 Part number	w	r	f	b	l_2	l_5	$t_{max\ a}$	$D_{a\ min}$	HIS		EG35	TI25
R105.0810.1.9	1	0.15	0.4	7	10	25	2	8	105125		▲	▲
R105.0815.1.9	1.5	0.15	0.4	7	10	25	3	8	105125		▲	▲
R105.0820.1.9	2	0.15	0.4	7	10	25	4	8	105125		▲	▲
R105.0825.1.9	2.5	0.15	0.4	7	10	25	5	8	105125		▲	▲
R105.0830.1.9	3	0.15	0.4	7	10	25	6	8	105125		▲	▲
L105.0810.1.9	1	0.15	0.4	7	10	25	2	8	105125		▲	▲
L105.0815.1.9	1.5	0.15	0.4	7	10	25	3	8	105125		▲	▲
L105.0820.1.9	2	0.15	0.4	7	10	25	4	8	105125		▲	▲
L105.0825.1.9	2.5	0.15	0.4	7	10	25	5	8	105125		▲	▲
L105.0830.1.9	3	0.15	0.4	7	10	25	6	8	105125		▲	▲
										P	●	●
										M	●	●
										K	o	●
										N	-	●
										S	-	●
										H	-	-

刀片
Insert

105

Ø ≥ 8 mm

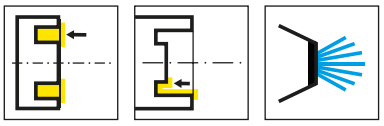

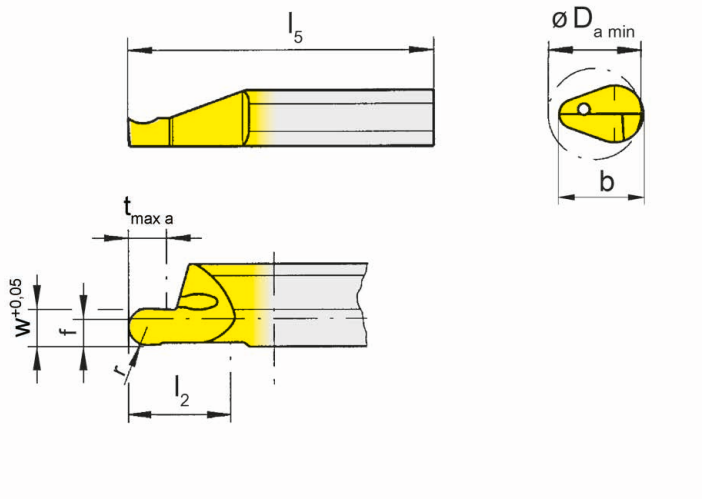

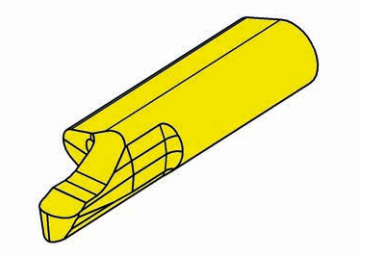

R=右手型-如图
R = right hand version shown

L=左手型
L = left hand version

▲ 库存
on stock

Δ 4周
4 weeks

硬质合金牌号
Carbide grades

产品型号 Part number	w	r	f	b	l_2	l_5	$t_{max\ a}$	$D_{a\ min}$	HIS	EG35	TI25
R105.8V10.1.8	1	0.5	2	7	10	25	2	8	105125	▲	▲
R105.8V16.1.8	1.6	0.8	2	7	10	25	3	8	105125	▲	▲
R105.8V20.1.8	2	1	2	7	10	25	4	8	105125	▲	▲
R105.8V25.1.8	2.5	1.25	2	7	10	25	5	8	105125	▲	▲
R105.8V30.1.8	3	1.5	2	7	10	25	6	8	105125	▲	▲
R105.8V10.2.8	1	0.5	2	7	15	35	2	8	105125	▲	▲
R105.8V16.2.8	1.6	0.8	2	7	15	35	3	8	105125	▲	▲
R105.8V20.2.8	2	1	2	7	15	35	4	8	105125	▲	▲
R105.8V25.2.8	2.5	1.25	2	7	15	35	5	8	105125	▲	▲
R105.8V30.2.8	3	1.5	2	7	15	35	6	8	105125	▲	▲
L105.8V10.1.8	1	0.5	2	7	10	25	2	8	105125	▲	▲
L105.8V16.1.8	1.6	0.8	2	7	10	25	3	8	105125	▲	▲
L105.8V20.1.8	2	1	2	7	10	25	4	8	105125	▲	▲
L105.8V25.1.8	2.5	1.25	2	7	10	25	5	8	105125	Δ	▲
L105.8V30.1.8	3	1.5	2	7	10	25	6	8	105125	▲	▲
L105.8V10.2.8	1	0.5	2	7	15	35	2	8	105125	Δ	▲
L105.8V16.2.8	1.6	0.8	2	7	15	35	3	8	105125	Δ	▲
L105.8V20.2.8	2	1	2	7	15	35	4	8	105125	▲	▲
L105.8V25.2.8	2.5	1.25	2	7	15	35	5	8	105125	Δ	Δ
L105.8V30.2.8	3	1.5	2	7	15	35	6	8	105125	Δ	▲

P	●	●
M	●	●
K	o	●
N	-	●
S	-	●
H	-	-

刀片
Insert

105

Ø ≥ 1 mm

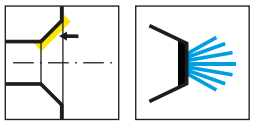

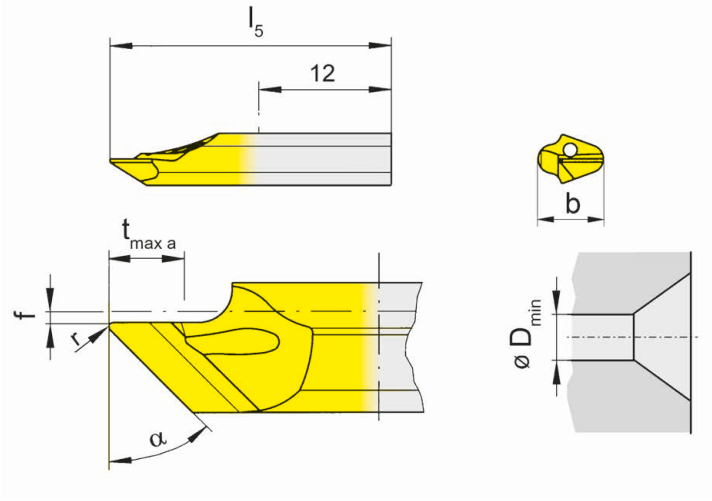

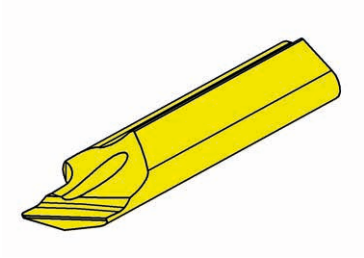

R=右手型-如图
R = right hand version shown

L=左手型
L = left hand version

硬质合金牌号
Carbide grades

▲ 库存
on stock

Δ 4周
4 weeks

产品型号 Part number	r	f	b	l_5	$t_{max\ a}$	D_{min}	α	HIS	EG35	TF45	TI25	TN35
R105.0045.0.1	0.2	0.5	5.9	20	3.5	1	45°	105123	▲	▲		▲
R105.0045.1.1	0.2	0.5	5.9	25	3.5	1	45°	105123	▲	▲	Δ	
R105.0060.0.1	0.2	0.5	5.9	20	4	1	60°	105123	▲	▲		
R105.0060.1.1	0.2	0.5	5.9	25	4	1	60°	105123	▲	▲	Δ	
L105.0045.0.1	0.2	0.5	5.9	20	3.5	1	45°	105123	▲	▲		▲
L105.0045.1.1	0.2	0.5	5.9	25	3.5	1	45°	105123	▲	▲	Δ	
L105.0060.0.1	0.2	0.5	5.9	20	4	1	60°	105123	▲	▲		
L105.0060.1.1	0.2	0.5	5.9	25	4	1	60°	105123	▲	▲	Δ	

	EG35	TF45	TI25	TN35
P	●	●	●	●
M	●	●	●	●
K	o	●	●	●
N	-	●	●	●
S	-	●	●	●
H	-	-	-	-

刀片
Insert

105

Ø ≥ 3 mm

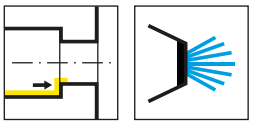

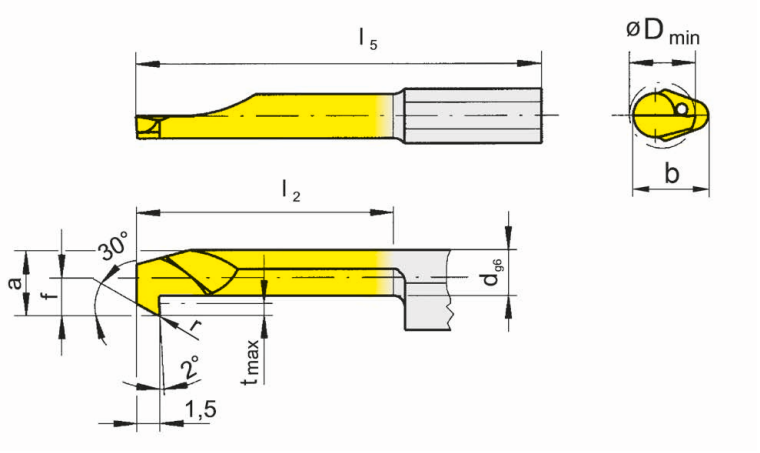

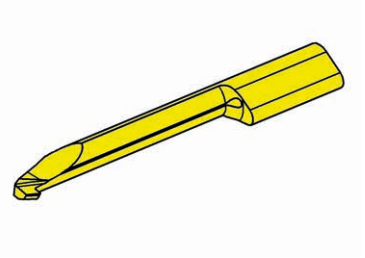

R=右手型-如图
R = right hand version shown

L=左手型
L = left hand version

▲ 库存
on stock

Δ 4周
4 weeks

硬质合金牌号
Carbide grades

产品型号 Part number	r	f	a	d	b	l_2	l_5	t_{max}	D_{min}	HIS	EG35	TH35	TI25
R105.3013.2.3	0.1	1.3	2.6	1.9	5.9	15	30	0.5	3	105123	▲	Δ	▲
R105.3013.3.3	0.1	1.3	2.6	1.9	5.9	20	35	0.5	3	105123	▲		▲
R105.3019.2.4	0.15	1.9	3.7	2.7	6.4	15	30	0.8	4	105124	▲		▲
R105.3019.4.4	0.15	1.9	3.7	2.7	6.4	25	40	0.8	4	105124	▲		▲
R105.3023.3.5	0.2	2.3	4.7	3.5	7	20	35	1	5	105125	▲		▲
R105.3023.5.5	0.2	2.3	4.7	3.5	7	30	45	1	5	105125	▲		▲
R105.3033.3.6	0.2	3.3	5.7	3.7	7	20	35	1.8	6	105125	▲		▲
R105.3033.5.6	0.2	3.3	5.7	3.7	7	30	45	1.8	6	105125	▲		▲
R105.3040.3.7	0.2	4	6.4	3.7	7	20	35	2.5	6.8	105125	▲		▲
R105.3040.5.7	0.2	4	6.4	3.7	7	30	45	2.5	6.8	105125	▲		▲
L105.3013.2.3	0.1	1.3	2.6	1.9	5.9	15	30	0.5	3	105123	Δ		▲
L105.3013.3.3	0.1	1.3	2.6	1.9	5.9	20	35	0.5	3	105123	Δ		Δ
L105.3019.2.4	0.15	1.9	3.7	2.7	6.4	15	30	0.8	4	105124			Δ
L105.3019.4.4	0.15	1.9	3.7	2.7	6.4	25	40	0.8	4	105124	Δ		Δ
L105.3023.3.5	0.2	2.3	4.7	3.5	7	20	35	1	5	105125	▲		▲
L105.3023.5.5	0.2	2.3	4.7	3.5	7	30	45	1	5	105125	Δ		Δ
L105.3033.3.6	0.2	3.3	5.7	3.7	7	20	35	1.8	6	105125	Δ		▲
L105.3033.5.6	0.2	3.3	5.7	3.7	7	30	45	1.8	6	105125	Δ		Δ
L105.3040.3.7	0.2	4	6.4	3.7	7	20	35	2.5	6.8	105125	▲		▲
L105.3040.5.7	0.2	4	6.4	3.7	7	30	45	2.5	6.8	105125	Δ		Δ

	EG35	TH35	TI25
P	●	●	●
M	●	●	●
K	o	●	●
N	-	●	●
S	-	●	●
H	-	-	-

刀片
Insert

105

Ø ≥ 4 mm

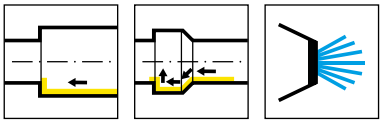

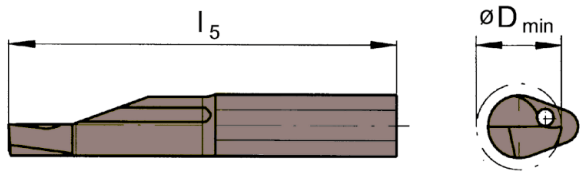

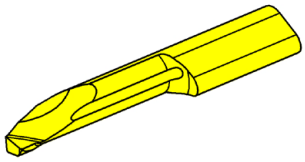

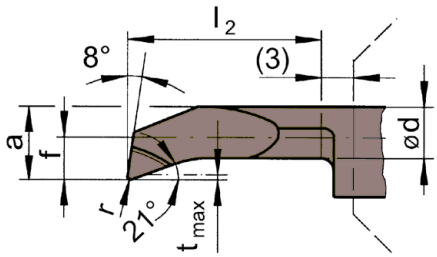

R=右手型-如图
R = right hand version shown

L=左手型
L = left hand version

▲ 库存
on stock

硬质合金牌号
Carbide grades

Δ 4周
4 weeks

产品型号 Part number	r	f	a	d	b	l_2	l_5	t_{max}	D_{min}	HIS		HS36	SG36
R105.1819.01.1.4F	0.1	1.9	3.7	2.9	6.4	10	25	0.3	4	105124			▲
R105.1819.01.2.4F	0.1	1.9	3.7	2.9	6.4	15	30	0.3	4	105124			▲
R105.1823.15.2.5F	0.15	2.3	4.7	4	7	15	30	0.5	5	105125			▲
R105.1823.15.3.5F	0.15	2.3	4.7	4	7	20	35	0.5	5	105125			▲
L105.1819.01.1.4F	0.1	1.9	3.7	2.9	6.4	10	25	0.3	4	105124		Δ	▲
L105.1819.01.2.4F	0.1	1.9	3.7	2.9	6.4	15	30	0.3	4	105124		Δ	▲
L105.1823.15.2.5F	0.15	2.3	4.7	4	7	15	30	0.5	5	105125		Δ	▲
L105.1823.15.3.5F	0.15	2.3	4.7	4	7	20	35	0.5	5	105125			▲
											P	-	-
											M	-	-
											K	-	-
											N	-	-
											S	-	●
											H	●	●

刀杆
Toolholder

B105

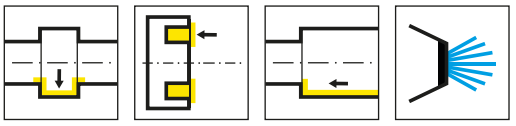

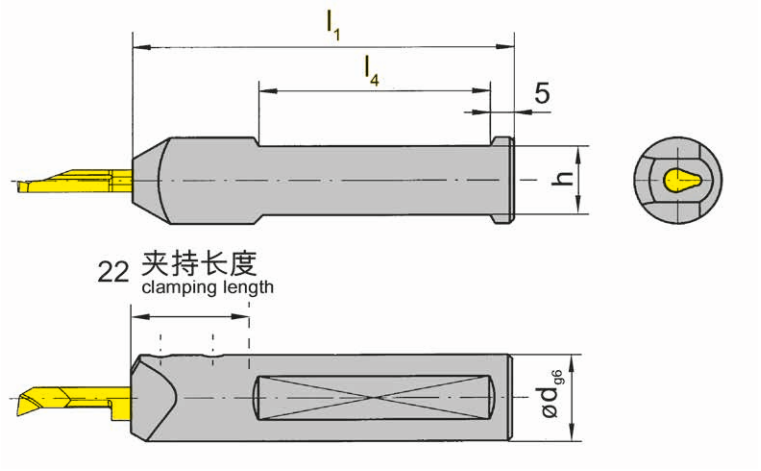

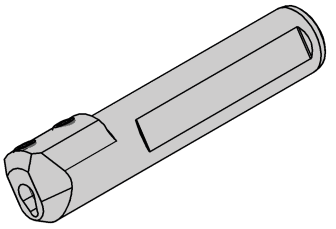

图示=右手型
Picture = right hand cutting version

产品型号 Part number	d	l_1	h	l_4	HWS
B105.0012.02	12	85	11	50	105225
B105.0016.02	16	85	14	50	105225
B105.0020.02	20	100	18	55	105225
B105.0022.02	22	100	20	55	105225

配件
Spare Parts

刀杆 Toolholder	**锁紧螺钉** Clamping Screw	**TORX PLUS®扳手** TORX PLUS® Wrench
B105...	**6.075T15P**	**T15PQ**

刀杆
Toolholder

B105C

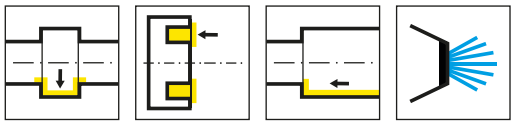

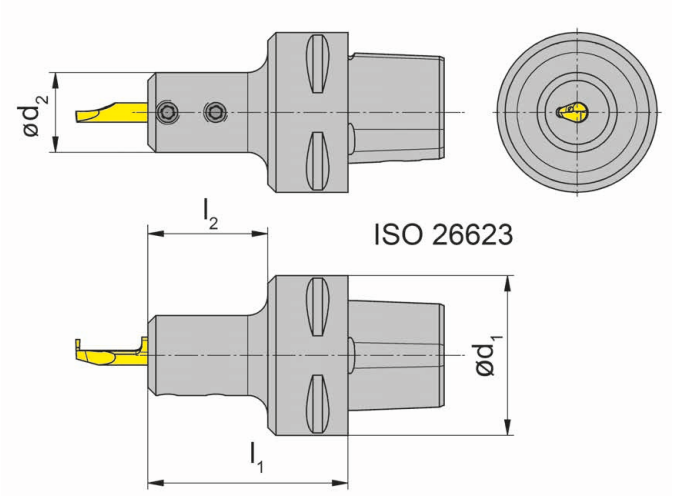

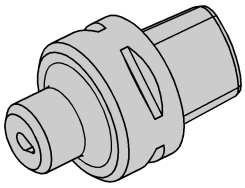

L=左手型-如图
L = left hand version shown

R=右手型
R = right hand version

产品型号 Part number	d_1	d_2	l_1	l_2	HWS
RB105.00C4.20.1.02	40	20	50	20	105225
RB105.00C6.20.1.02	63	20	52	22	105225
LB105.00C4.20.1.02	40	20	50	20	105225
LB105.00C6.20.1.02	63	20	52	22	105225

仅适用于夹持加长型刀片
only usable for inserts with extended clamping length

配件
Spare Parts

刀杆 Toolholder	**锁紧螺钉** Clamping Screw	**TORX PLUS®扳手** TORX PLUS® Wrench
R/LB105...	**6.075T15P**	**T15PQ**

刀片
Insert

105

Ø ≥ 5 mm

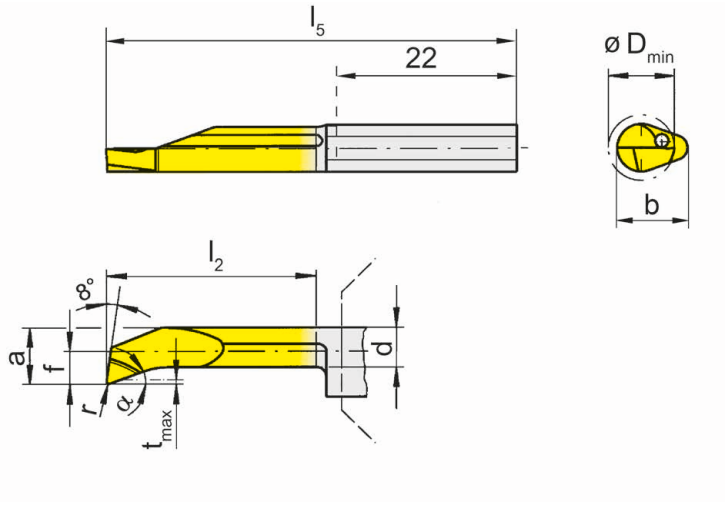

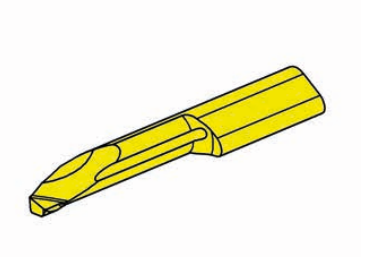

R=右手型-如图
R = right hand version shown

L=左手型
L = left hand version

▲ 库存
on stock

硬质合金牌号
Carbide grades

Δ 4周
4 weeks

产品型号 Part number	r	f	a	d	b	l_2	l_5	t_{max}	D_{min}	α	HIS	EG35	TH35	TI25	TN35
R105.1823.4.5.2	0.1	2.3	4.7	4.2	7	25	50	0.3	5	21°	105225	Δ	▲	▲	
R105.1823.5.5.2	0.1	2.3	4.7	4.2	7	30	55	0.3	5	21°	105225	Δ	▲	▲	
R105.1833.4.6.2	0.1	3.3	5.7	4.9	7	25	50	0.3	6	21°	105225	Δ	▲	▲	
R105.1833.5.6.2	0.1	3.3	5.7	4.9	7	30	55	0.3	6	21°	105225	Δ	▲	▲	
R105.1840.4.7.2	0.1	4	6.4	5.4	7	25	50	0.3	6.8	21°	105225	Δ	▲	▲	
R105.1840.5.7.2	0.1	4	6.4	5.4	7	30	55	0.3	6.8	21°	105225	Δ	▲	▲	Δ
R105.1840.7.7.2	0.1	4	6.4	5.4	7	40	65	0.3	6.8	21°	105225	▲		▲	
R105.4733.5.6.2	0.1	3.3	5.7	3.7	7	30	55	1.8	6	47°	105225	Δ	▲	▲	
L105.1823.4.5.2	0.1	2.3	4.7	4.2	7	25	50	0.3	5	21°	105225	Δ	▲	▲	
L105.1823.5.5.2	0.1	2.3	4.7	4.2	7	30	55	0.3	5	21°	105225		▲	Δ	
L105.1833.4.6.2	0.1	3.3	5.7	4.9	7	25	50	0.3	6	21°	105225	Δ	Δ	Δ	
L105.1833.5.6.2	0.1	3.3	5.7	4.9	7	30	55	0.3	6	21°	105225	Δ	▲	Δ	
L105.1840.4.7.2	0.1	4	6.4	5.4	7	25	50	0.3	6.8	21°	105225	Δ	▲	▲	
L105.1840.5.7.2	0.1	4	6.4	5.4	7	30	55	0.3	6.8	21°	105225	Δ	Δ	▲	
L105.1840.7.7.2	0.1	4	6.4	5.4	7	40	65	0.3	6.8	21°	105225	Δ		Δ	
L105.4733.5.6.2	0.1	3.3	5.7	3.7	7	30	55	1.8	6	47°	105225	Δ	Δ	Δ	

	EG35	TH35	TI25	TN35
P	●	●	●	●
M	●	●	●	●
K	o	●	●	●
N	-	●	●	●
S	-	●	●	●
H	-	-	-	-

夹持长度增长
with extended clamping length

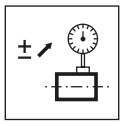

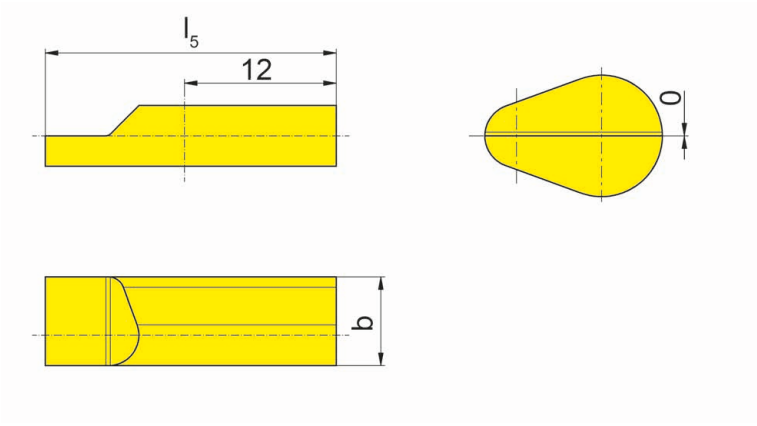

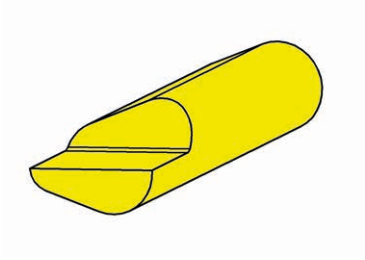

R=右手型-如图
R = right hand version shown

产品型号 Part number	l_5	b	HIS
R105.LEHR.H.03	25	5,9	105123
L105.LEHR.H.03	25	5,9	105123
R105.LEHR.H.04	25	6,4	105124
L105.LEHR.H.04	25	6,4	105124
R105.LEHR.H.05	25	7,0	105125
L105.LEHR.H.05	25	7,0	105125

刀片用于刀杆的调整
Insert for tool set up

刀片
Insert

105

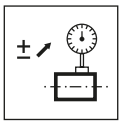

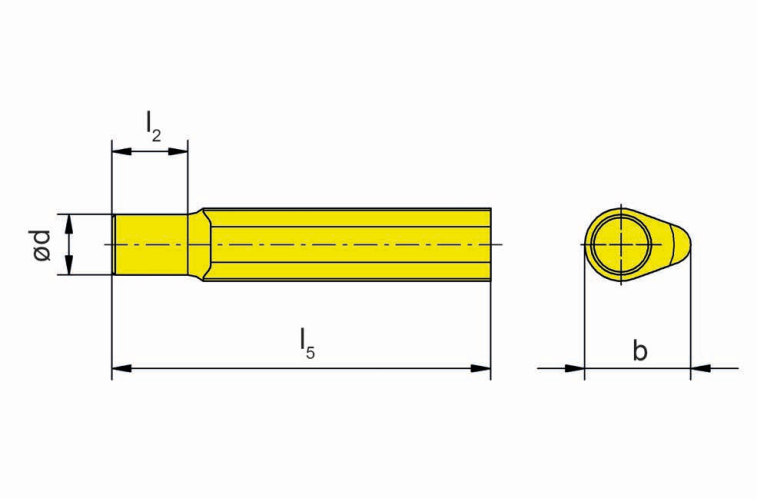

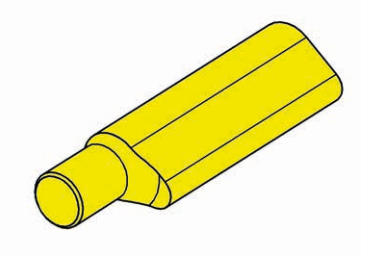

产品型号 Part number	d	b	l_2	l_5	HIS
105.LEHR.D.03	1.7	5.9	3	25	105123
105.LEHR.D.04	1.7	6.4	3	25	105124
105.LEHR.D.05	4	7	5	25	105125

刀片用于刀杆的调整
Insert for tool set up

刀杆
Toolholder

B105

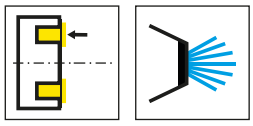

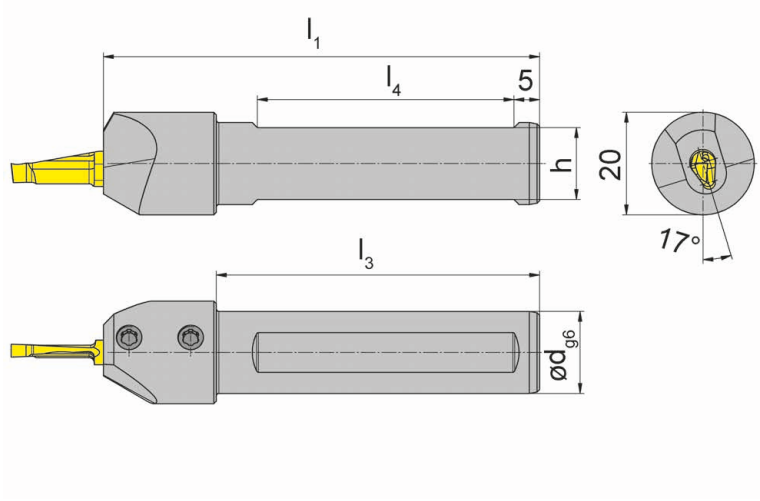

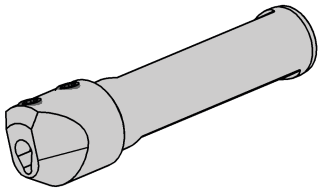

L=左手型-如图
L = left hand version shown

R=右手型
R = right hand version

产品型号 Part number	d	l_1	l_3	h	l_4	HWS
RB105.0016.12.2	16	85	63	14	50	105225
RB105.0020.12.2	20	100	63	18	55	105225
LB105.0016.12.2	16	85	63	14	50	105225
LB105.0020.12.2	20	100	63	18	55	105225

配件
Spare Parts

刀杆 Toolholder	**锁紧螺钉** Clamping Screw	**TORX PLUS®扳手** TORX PLUS® Wrench
R/LB105...	**6.075T15P**	**T15PQ**

刀片
Insert

A105 Ø ≥ 10 mm

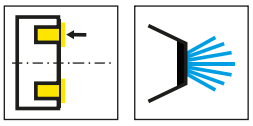

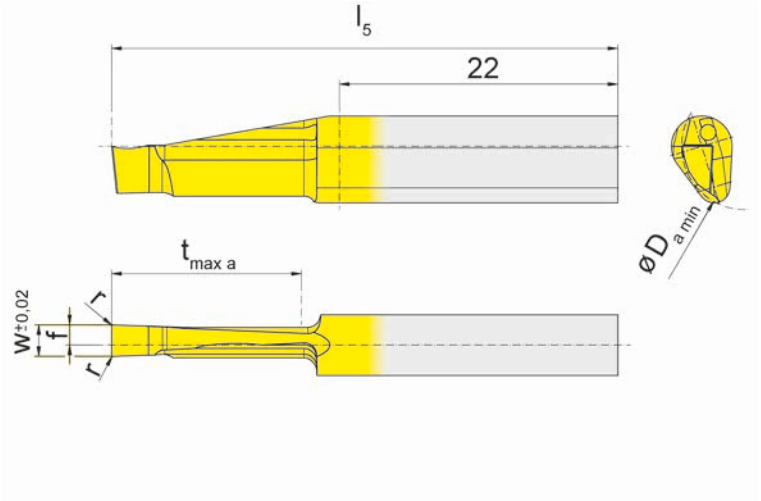

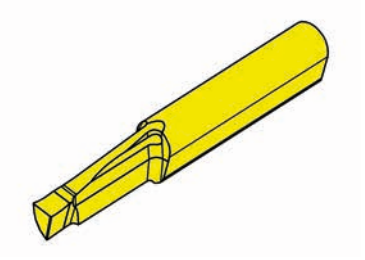

L=左手型-如图
L = left hand version shown

R=右手型
R = right hand version

▲ 库存
on stock

Δ 4周
4 weeks

硬质合金牌号
Carbide grades

产品型号 Part number	w	r	f	l_5	$t_{max\ a}$	$D_{a\ min}$	$D_{a\ max}$	HIS		EG35	TI25
RA105.1020.2.2	2	0,1	1,4	40	15	10	44	105225		▲	▲
RA105.1025.2.2	2,5	0,1	1,6	40	15	10	45	105225		▲	▲
RA105.1030.2.2	3	0,1	1	40	15	10	46	105225		▲	▲
LA105.1020.2.2	2	0,1	1,4	40	15	10	44	105225		▲	▲
LA105.1025.2.2	2,5	0,1	1,6	40	15	10	45	105225		▲	▲
LA105.1030.2.2	3	0,1	1	40	15	10	46	105225		▲	▲
									P	●	●
									M	●	●
									K	o	●
									N	-	●
									S	-	●
									H	-	-

Da min在10和40mm之间时，可达到满切情况下的最大切深
Face grooving with full width of the full depth only possible between Da min 10 - 40 mm!

刀片
Insert

A105 Ø ≥ 10 mm

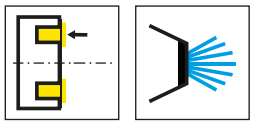

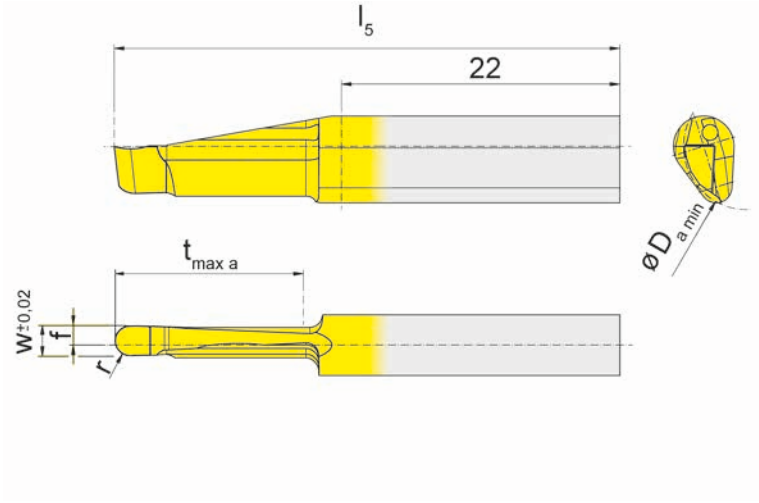

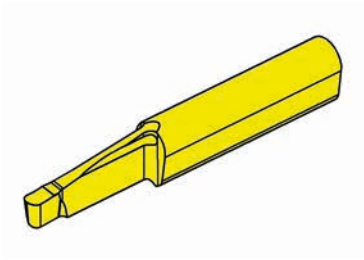

L=左手型-如图
L = left hand version shown

R=右手型
R = right hand version

▲ 库存
on stock

Δ 4周
4 weeks

硬质合金牌号
Carbide grades

产品型号 Part number	w	r	f	l_5	$t_{max\ a}$	$D_{a\ min}$	$D_{a\ max}$	HIS		EG35	TI25
RA105.1020.10.2.2	2	1	1,4	40	15	10	44	105225		▲	▲
RA105.1025.12.2.2	2,5	1,25	1,6	40	15	10	45	105225		Δ	▲
RA105.1030.15.2.2	3	1,5	1,9	40	15	10	46	105225		▲	▲
LA105.1020.10.2.2	2	1	1,4	40	15	10	44	105225		Δ	▲
LA105.1025.12.2.2	2,5	1,25	1,6	40	15	10	45	105225		Δ	Δ
LA105.1030.15.2.2	3	1,5	1,9	40	15	10	46	105225		Δ	▲
									P	●	●
									M	●	●
									K	o	●
									N	-	●
									S	-	●
									H	-	-

Da min在10和40mm之间时，可达到满切情况下的最大切深
Face grooving with full width of the full depth only possible between Da min 10 - 40 mm!

刀片
Insert

105

Ø ≥ 3 mm

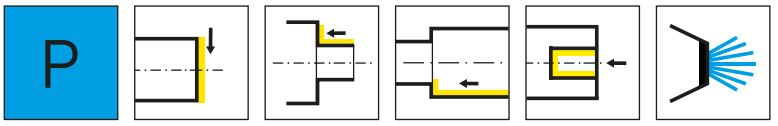

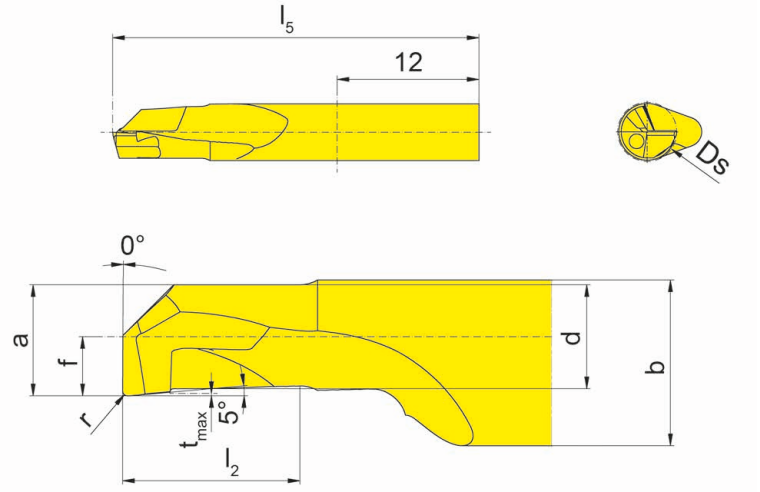

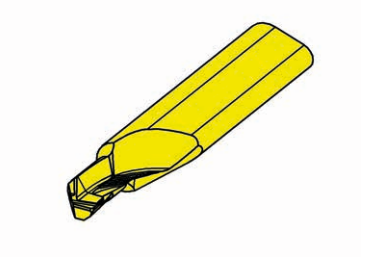

R=右手型-如图
R = right hand version shown

L=左手型
L = left hand version

硬质合金牌号
Carbide grades

▲ 库存
on stock

Δ 4周
4 weeks

产品型号 Part number	r	f	a	d	b	l_2	l_5	t_{max}	Ds	HIS		EG35
R105.BO.30.20.045.1	0.2	1.5	2.7	2.4	7	4.5	31	0.1	3	105125		▲
R105.BO.30.20.075.1	0.2	1.5	2.7	2.4	7	7.5	31	0.1	3	105125		▲
R105.BO.40.20.060.1	0.2	2	3.7	3.4	7	6	31	0.1	4	105125		▲
R105.BO.40.20.100.1	0.2	2	3.7	3.4	7	10	31	0.1	4	105125		▲
R105.BO.50.20.075.1	0.2	2.5	4.7	4.4	7	7.5	31	0.1	5	105125		▲
R105.BO.50.20.125.1	0.2	2.5	4.7	4.4	7	12.5	36	0.1	5	105125		▲
R105.BO.60.20.090.1	0.2	3	5.4	5.1	7	9	31	0.1	6	105125		▲
R105.BO.60.20.150.1	0.2	3	5.4	5.1	7	15	36	0.1	6	105125		▲
R105.BO.70.20.105.1	0.2	3.5	5.9	5.6	7	10.5	36	0.1	7	105125		▲
R105.BO.70.20.175.1	0.2	3.5	5.9	5.6	7	17.5	40	0.1	7	105125		▲
L105.BO.30.20.045.1	0.2	1.5	2.7	2.4	7	4.5	31	0.1	3	105125		Δ
L105.BO.30.20.075.1	0.2	1.5	2.7	2.4	7	7.5	31	0.1	3	105125		Δ
L105.BO.40.20.060.1	0.2	2	3.7	3.4	7	6	31	0.1	4	105125		Δ
L105.BO.40.20.100.1	0.2	2	3.7	3.4	7	10	31	0.1	4	105125		Δ
L105.BO.50.20.075.1	0.2	2.5	4.7	4.4	7	7.5	31	0.1	5	105125		Δ
L105.BO.50.20.125.1	0.2	2.5	4.7	4.4	7	12.5	36	0.1	5	105125		Δ
L105.BO.60.20.090.1	0.2	3	5.4	5.1	7	9	31	0.1	6	105125		Δ
L105.BO.60.20.150.1	0.2	3	5.4	5.1	7	15	36	0.1	6	105125		Δ
L105.BO.70.20.105.1	0.2	3.5	5.9	5.6	7	10.5	36	0.1	7	105125		Δ
L105.BO.70.20.175.1	0.2	3.5	5.9	5.6	7	17.5	40	0.1	7	105125		Δ

内冷供应从直径 Ø 5 mm起
with through coolant supply from cutting diameter 5 mm

带断屑槽
with chip breaker

P	●
M	●
K	o
N	-
S	-
H	-

刀片
Insert

105 Ø ≥ 3 mm

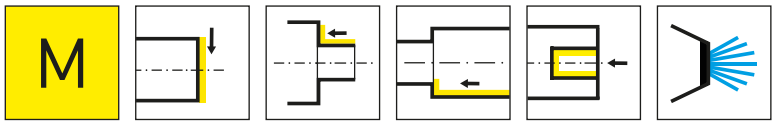

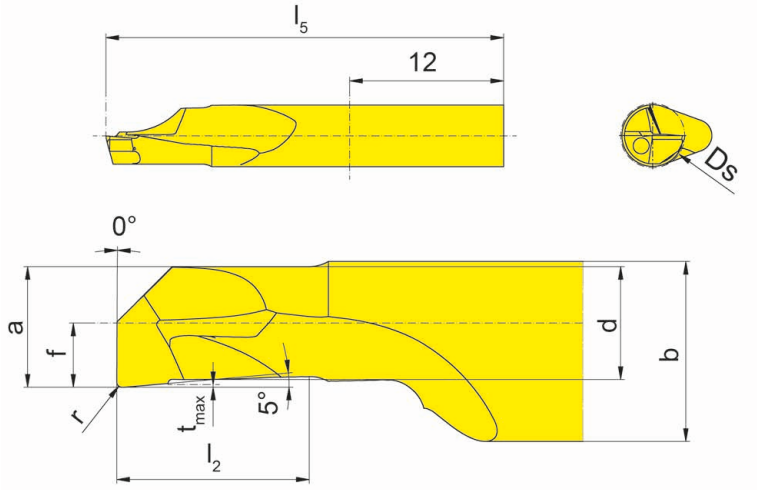

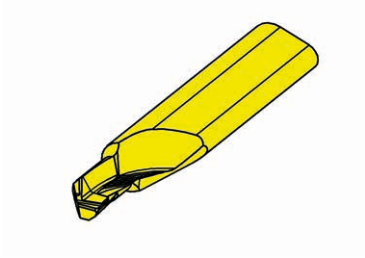

R=右手型-如图
R = right hand version shown

L=左手型
L = left hand version

硬质合金牌号
Carbide grades

▲ 库存
on stock

Δ 4周
4 weeks

产品型号 Part number	r	f	a	d	b	l_2	l_5	t_{max}	Ds	HIS		EG35
R105.BO.30.20.045.2	0.2	1.5	2.7	2.4	7	4.5	31	0.1	3	105125		▲
R105.BO.30.20.075.2	0.2	1.5	2.7	2.4	7	7.5	31	0.1	3	105125		▲
R105.BO.40.20.060.2	0.2	2	3.7	3.4	7	6	31	0.1	4	105125		▲
R105.BO.40.20.100.2	0.2	2	3.7	3.4	7	10	31	0.1	4	105125		▲
R105.BO.50.20.075.2	0.2	2.5	4.7	4.4	7	7.5	31	0.1	5	105125		▲
R105.BO.50.20.125.2	0.2	2.5	4.7	4.4	7	12.5	36	0.1	5	105125		▲
R105.BO.60.20.090.2	0.2	3	5.4	5.1	7	9	31	0.1	6	105125		▲
R105.BO.60.20.150.2	0.2	3	5.4	5.1	7	15	36	0.1	6	105125		▲
R105.BO.70.20.105.2	0.2	3.5	5.9	5.6	7	10.5	36	0.1	7	105125		▲
R105.BO.70.20.175.2	0.2	3.5	5.9	5.6	7	17.5	40	0.1	7	105125		▲
L105.BO.30.20.045.2	0.2	1.5	2.7	2.4	7	4.5	31	0.1	3	105125		Δ
L105.BO.30.20.075.2	0.2	1.5	2.7	2.4	7	7.5	31	0.1	3	105125		Δ
L105.BO.40.20.060.2	0.2	2	3.7	3.4	7	6	31	0.1	4	105125		Δ
L105.BO.40.20.100.2	0.2	2	3.7	3.4	7	10	31	0.1	4	105125		Δ
L105.BO.50.20.075.2	0.2	2.5	4.7	4.4	7	7.5	31	0.1	5	105125		Δ
L105.BO.50.20.125.2	0.2	2.5	4.7	4.4	7	12.5	36	0.1	5	105125		Δ
L105.BO.60.20.090.2	0.2	3	5.4	5.1	7	9	31	0.1	6	105125		Δ
L105.BO.60.20.150.2	0.2	3	5.4	5.1	7	15	36	0.1	6	105125		Δ
L105.BO.70.20.105.2	0.2	3.5	5.9	5.6	7	10.5	36	0.1	7	105125		Δ
L105.BO.70.20.175.2	0.2	3.5	5.9	5.6	7	17.5	40	0.1	7	105125		Δ

内冷供应从直径 Ø 5 mm起
with through coolant supply from cutting diameter 5 mm

通用槽型
universal geometry

P	●
M	●
K	o
N	-
S	-
H	-

B

109

刀杆和刀片

Toolholder and Inserts

刀杆
Toolholder
B109

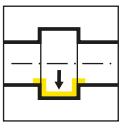

页/Page
148-149

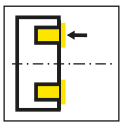

页/Page
165

刀片
Insert
109/A109

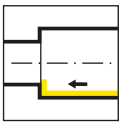

页/Page
150-151

页/Page
152-153

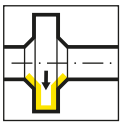

页/Page
154

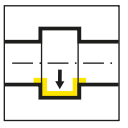

页/Page
155-158

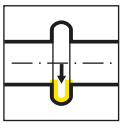

页/Page
159

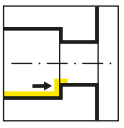

页/Page
160

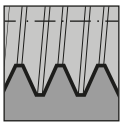

页/Page
161-162

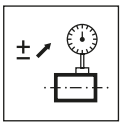

页/Page
163-164

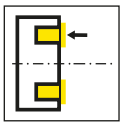

页/Page
166

孔径 Bore Ø	产品线 / Product line											
	105	109	110	106	107	108	10P	111	11P	114	116	18P
≥ 0.2	•											
≥ 0.5	•											
≥ 0.7	•											
≥ 1.0	•											
≥ 1.5	•											
≥ 2.0	•											
≥ 3.0	•											
≥ 4.0	•											
≥ 5.0	•											
≥ 6.0	•	•	•	•								
≥ 6.8		•	•	•								
≥ 7.0		•			•							
≥ 7.8			•		•	•						
≥ 8.0			•		•	•						
≥ 9.0			•		•	•	•					
≥ 10.0			•				•	•	•			
≥ 10.5									•			
≥ 11.0								•	•			
≥ 11.5									•			
≥ 13.8										•		
≥ 14.0										•	•	
≥ 16.0											•	
≥ 16.5										(•)		
≥ 18.0												•
槽深 Depth of groove	2.5	2.5	4.0	0.8	2.0	1.0	3.0	2.3	3.5	4.0 (6.5)	4.3	8.0
槽宽 Width of groove	0.5- 2.0	1.0- 2.0	1.0- 3.0	0.7- 1.5	1.0- 2.0	0.7- 2.0	1.0- 3.0	0.7- 3.0	1.0- 3.0	0.7- 3.0	0.7- 4.0	2.0- 3.0
加工 / Machining												
切槽 Grooving	•	•	•	•	•	•	•	•	•	•	•	•
镗孔 Boring	•	•	•	•	•	•		•		•	•	
螺纹切削 Threading	•	•			•	•		•		•	•	
倒角 Chamfering	•	•			•	•		•		•	•	
端面切槽 Face Grooving	•	•	•							•		
镗孔和仿形加工 Boring and Profiling	•											

B109

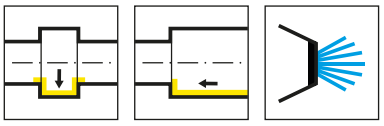

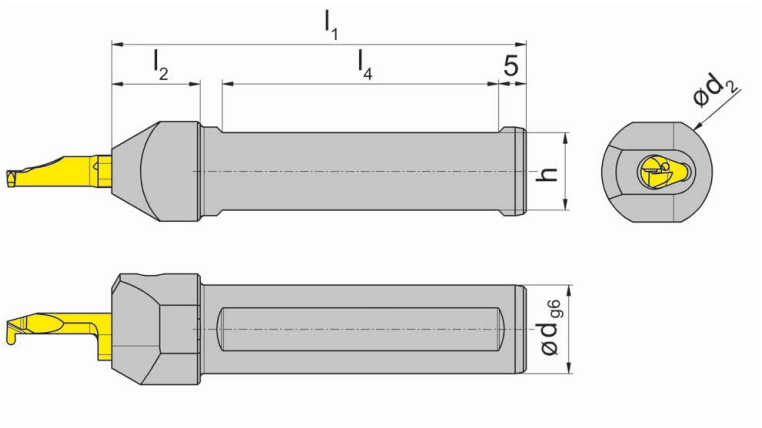

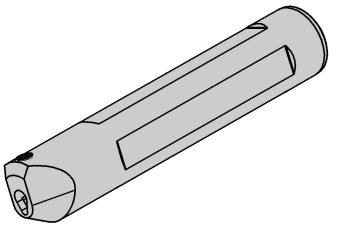

图示=右手型
Picture = right hand cutting version

产品型号 Part number	d	l_1	h	l_4	l_2	d_2	HWS
B109.0012.01	12	75	10	50	16	20	109140
B109.0016.01	16	75	14	50	16	20	109140
B109.0020.01	20	90	18	55	-	20	109140
B109.0025.01	25	100	23	55	-	25	109140

配件
Spare Parts

刀杆 Toolholder	锁紧螺钉 Clamping Screw	TORX PLUS®扳手 TORX PLUS® Wrench
B109...	**6.075T15P**	**T15PQ**

B109

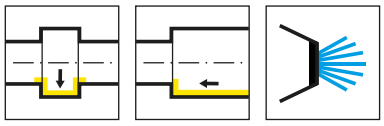

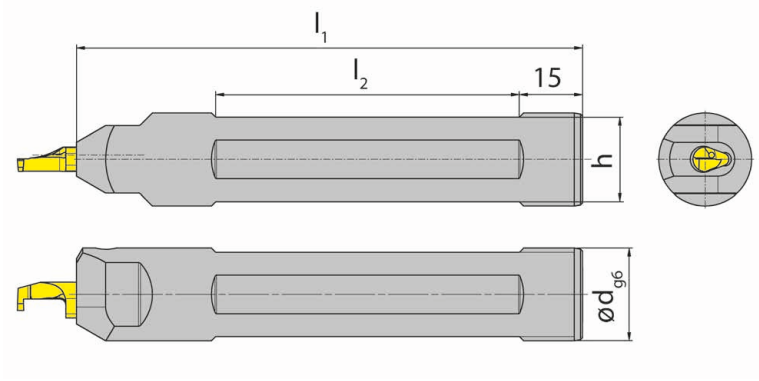

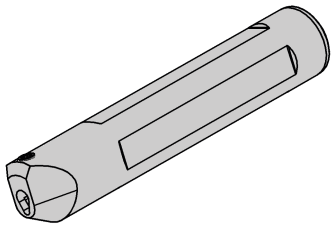

图示=右手型
Picture = right hand cutting version

产品型号 Part number	d	l_1	h	l_2	HWS
B109.0022.1.2.01	22	120	20	72	109140

配件
Spare Parts

刀杆 Toolholder	锁紧螺钉 Clamping Screw	TORX PLUS®扳手 TORX PLUS® Wrench
B109.0022.1.2.01	**6.075T15P**	**T15PQ**

刀片
Insert

109

Ø ≥ 6 mm

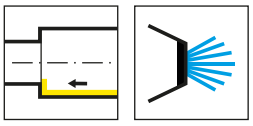

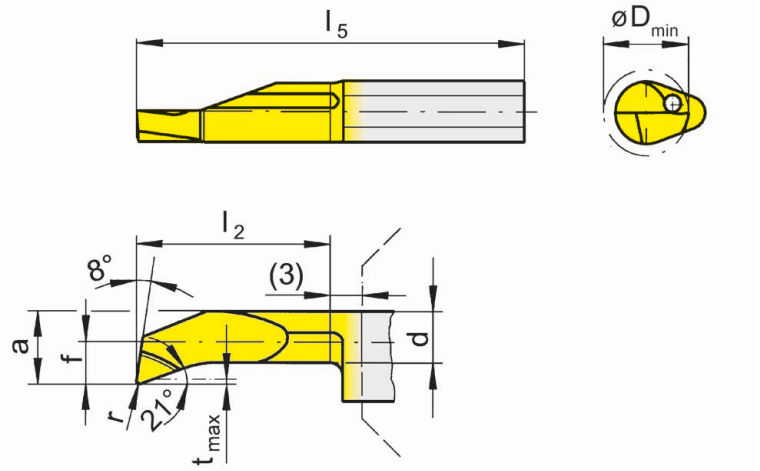

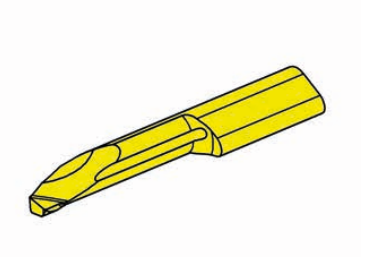

R=右手型-如图
R = right hand version shown

L=左手型
L = left hand version

硬质合金牌号
Carbide grades

▲ 库存
on stock

Δ 4周
4 weeks

产品型号 Part number	r	f	a	d	l_2	l_5	t_{max}	D_{min}	HIS		TH35
R109.1828.1.6	0.2	2.8	5.7	5	10	28	0.4	6	109140		Δ
R109.1828.2.6	0.2	2.8	5.7	5	15	33	0.4	6	109140		Δ
R109.1828.3.6	0.2	2.8	5.7	5	20	38	0.4	6	109140		▲
R109.1828.4.6	0.2	2.8	5.7	5	25	43	0.4	6	109140		Δ
R109.1828.5.6	0.2	2.8	5.7	5	30	48	0.4	6	109140		Δ
R109.1828.6.6	0.2	2.8	5.7	5	35	53	0.4	6	109140		Δ
R109.1828.7.6	0.2	2.8	5.7	5	40	58	0.4	6	109140		▲
R109.1838.2.7	0.2	3.8	6.7	6	15	33	0.4	7	109140		Δ
R109.1838.3.7	0.2	3.8	6.7	6	20	38	0.4	7	109140		Δ
R109.1838.4.7	0.2	3.8	6.7	6	25	43	0.4	7	109140		Δ
R109.1838.5.7	0.2	3.8	6.7	6	30	48	0.4	7	109140		▲
R109.1838.6.7	0.2	3.8	6.7	6	35	53	0.4	7	109140		▲
R109.1838.7.7	0.2	3.8	6.7	6	40	58	0.4	7	109140		▲
R109.1838.8.7	0.2	3.8	6.7	6	45	63	0.4	7	109140		▲
L109.1828.1.6	0.2	2.8	5.7	5	10	28	0.4	6	109140		Δ
L109.1828.2.6	0.2	2.8	5.7	5	15	33	0.4	6	109140		Δ
L109.1828.3.6	0.2	2.8	5.7	5	20	38	0.4	6	109140		Δ
L109.1828.4.6	0.2	2.8	5.7	5	25	43	0.4	6	109140		
L109.1828.5.6	0.2	2.8	5.7	5	30	48	0.4	6	109140		Δ
L109.1828.6.6	0.2	2.8	5.7	5	35	53	0.4	6	109140		Δ
L109.1828.7.6	0.2	2.8	5.7	5	40	58	0.4	6	109140		Δ
L109.1838.2.7	0.2	3.8	6.7	6	15	33	0.4	7	109140		Δ
L109.1838.3.7	0.2	3.8	6.7	6	20	38	0.4	7	109140		Δ
L109.1838.4.7	0.2	3.8	6.7	6	25	43	0.4	7	109140		Δ
L109.1838.5.7	0.2	3.8	6.7	6	30	48	0.4	7	109140		Δ
L109.1838.6.7	0.2	3.8	6.7	6	35	53	0.4	7	109140		Δ
L109.1838.7.7	0.2	3.8	6.7	6	40	58	0.4	7	109140		Δ
L109.1838.8.7	0.2	3.8	6.7	6	45	63	0.4	7	109140		Δ

P	●
M	●
K	●
N	●
S	●
H	-

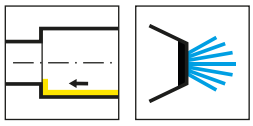

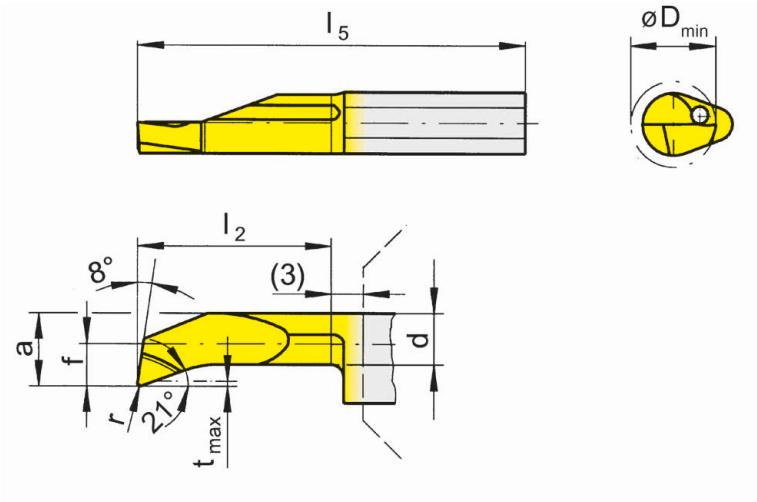

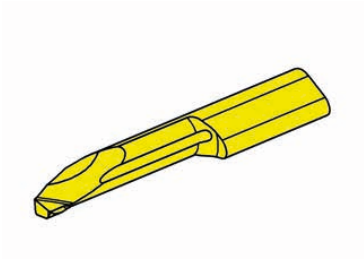

R=右手型-如图
R = right hand version shown

L=左手型
L = left hand version

硬质合金牌号
Carbide grades

▲ 库存
on stock

Δ 4周
4 weeks

产品型号 Part number	r	f	a	d	l_2	l_5	t_{max}	D_{min}	HIS		TH35
R109.1828.04.1.6	0.4	2.8	5.7	5	10	28	0.4	6	109140		Δ
R109.1828.04.2.6	0.4	2.8	5.7	5	15	33	0.4	6	109140		Δ
R109.1828.04.3.6	0.4	2.8	5.7	5	20	38	0.4	6	109140		Δ
R109.1828.04.4.6	0.4	2.8	5.7	5	25	43	0.4	6	109140		Δ
R109.1828.04.6.6	0.4	2.8	5.7	5	35	53	0.4	6	109140		Δ
R109.1828.04.7.6	0.4	2.8	5.7	5	40	58	0.4	6	109140		Δ
R109.1838.04.2.7	0.4	3.8	6.7	6	15	33	0.4	7	109140		Δ
R109.1838.04.3.7	0.4	3.8	6.7	6	20	38	0.4	7	109140		Δ
R109.1838.04.5.7	0.4	3.8	6.7	6	30	48	0.4	7	109140		Δ
R109.1838.04.8.7	0.4	3.8	6.7	6	45	63	0.4	7	109140		▲
L109.1828.04.1.6	0.4	2.8	5.7	5	10	28	0.4	6	109140		Δ
L109.1828.04.2.6	0.4	2.8	5.7	5	15	33	0.4	6	109140		Δ
L109.1828.04.3.6	0.4	2.8	5.7	5	20	38	0.4	6	109140		Δ
L109.1828.04.4.6	0.4	2.8	5.7	5	25	43	0.4	6	109140		Δ
L109.1828.04.6.6	0.4	2.8	5.7	5	35	53	0.4	6	109140		Δ
L109.1828.04.7.6	0.4	2.8	5.7	5	40	58	0.4	6	109140		Δ
L109.1838.04.2.7	0.4	3.8	6.7	6	15	33	0.4	7	109140		Δ
L109.1838.04.3.7	0.4	3.8	6.7	6	20	38	0.4	7	109140		Δ
L109.1838.04.8.7	0.4	3.8	6.7	6	45	63	0.4	7	109140		Δ
										P	●
										M	●
										K	●
										N	●
										S	●
										H	-

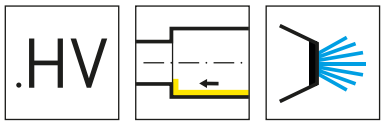

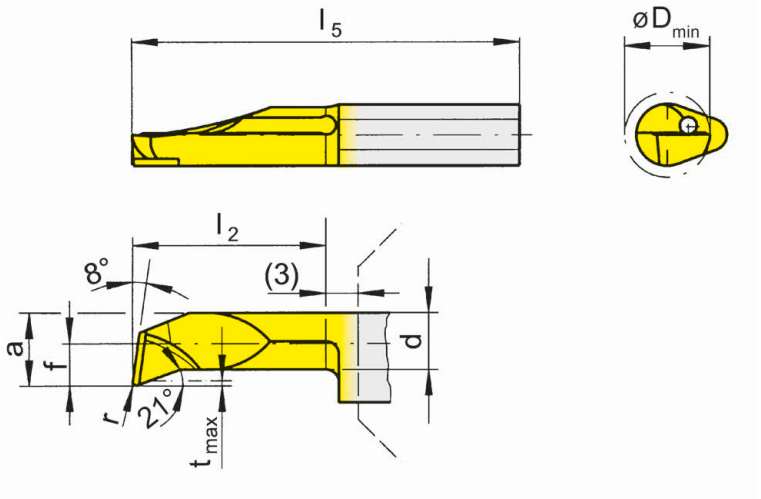

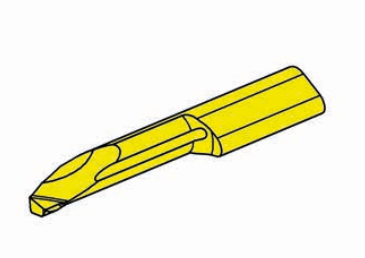

R=右手型-如图
R = right hand version shown

L=左手型
L = left hand version

硬质合金牌号
Carbide grades

▲ 库存
on stock

Δ 4周
4 weeks

产品型号 Part number	r	f	a	d	l_2	l_5	t_{max}	D_{min}	HIS		TH35
R109.1828.1.HV6	0.2	2.8	5.7	5	10	28	0.4	6	109140		Δ
R109.1828.2.HV6	0.2	2.8	5.7	5	15	33	0.4	6	109140		Δ
R109.1828.3.HV6	0.2	2.8	5.7	5	20	38	0.4	6	109140		Δ
R109.1828.4.HV6	0.2	2.8	5.7	5	25	43	0.4	6	109140		Δ
R109.1828.5.HV6	0.2	2.8	5.7	5	30	48	0.4	6	109140		▲
R109.1828.6.HV6	0.2	2.8	5.7	5	35	53	0.4	6	109140		▲
R109.1828.7.HV6	0.2	2.8	5.7	5	40	58	0.4	6	109140		▲
R109.1838.3.HV7	0.2	3.8	6.7	6	20	38	0.4	7	109140		Δ
R109.1838.5.HV7	0.2	3.8	6.7	6	30	48	0.4	7	109140		Δ
R109.1838.6.HV7	0.2	3.8	6.7	6	35	53	0.4	7	109140		Δ
R109.1838.7.HV7	0.2	3.8	6.7	6	40	58	0.4	7	109140		Δ
R109.1838.8.HV7	0.2	3.8	6.7	6	45	63	0.4	7	109140		Δ
L109.1828.1.HV6	0.2	2.8	5.7	5	10	28	0.4	6	109140		Δ
L109.1828.2.HV6	0.2	2.8	5.7	5	15	33	0.4	6	109140		Δ
L109.1828.3.HV6	0.2	2.8	5.7	5	20	38	0.4	6	109140		Δ
L109.1828.4.HV6	0.2	2.8	5.7	5	25	43	0.4	6	109140		Δ
L109.1828.5.HV6	0.2	2.8	5.7	5	30	48	0.4	6	109140		
L109.1828.6.HV6	0.2	2.8	5.7	5	35	53	0.4	6	109140		Δ
L109.1828.7.HV6	0.2	2.8	5.7	5	40	58	0.4	6	109140		Δ
L109.1838.2.HV7	0.2	3.8	6.7	6	15	33	0.4	7	109140		Δ
L109.1838.5.HV7	0.2	3.8	6.7	6	30	48	0.4	7	109140		Δ
L109.1838.6.HV7	0.2	3.8	6.7	6	35	53	0.4	7	109140		Δ
L109.1838.7.HV7	0.2	3.8	6.7	6	40	58	0.4	7	109140		Δ
L109.1838.8.HV7	0.2	3.8	6.7	6	45	63	0.4	7	109140		Δ
										P	●
										M	●
										K	●
										N	●
										S	●
										H	-

刀片
Insert

109 Ø ≥ 6 mm

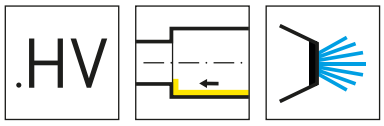

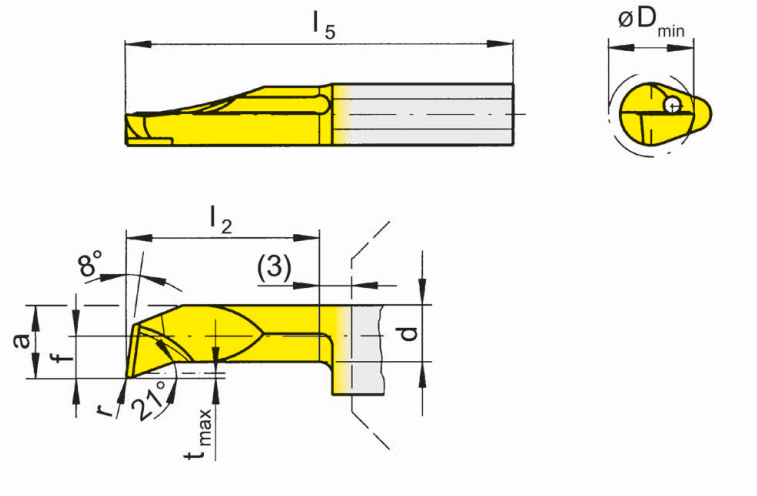

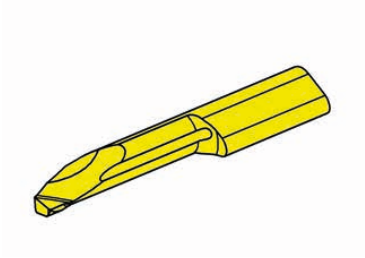

R=右手型-如图
R = right hand version shown

L=左手型
L = left hand version

硬质合金牌号
Carbide grades

▲ 库存
on stock

Δ 4周
4 weeks

产品型号 Part number	r	f	a	d	l_2	l_5	t_{max}	D_{min}	HIS		TH35
R109.1828.04.1.HV6	0.4	2.8	5.7	5	10	28	0.4	6	109140		Δ
R109.1828.04.2.HV6	0.4	2.8	5.7	5	15	33	0.4	6	109140		Δ
R109.1828.04.3.HV6	0.4	2.8	5.7	5	20	38	0.4	6	109140		Δ
R109.1828.04.4.HV6	0.4	2.8	5.7	5	25	43	0.4	6	109140		Δ
R109.1828.04.5.HV6	0.4	2.8	5.7	5	30	48	0.4	6	109140		Δ
R109.1828.04.6.HV6	0.4	2.8	5.7	5	35	53	0.4	6	109140		Δ
R109.1828.04.7.HV6	0.4	2.8	5.7	5	40	58	0.4	6	109140		Δ
R109.1838.04.2.HV7	0.4	3.8	6.7	6	15	33	0.4	7	109140		Δ
R109.1838.04.3.HV7	0.4	3.8	6.7	6	20	38	0.4	7	109140		Δ
R109.1838.04.4.HV7	0.4	3.8	6.7	6	25	43	0.4	7	109140		Δ
R109.1838.04.5.HV7	0.4	3.8	6.7	6	30	48	0.4	7	109140		Δ
R109.1838.04.6.HV7	0.4	3.8	6.7	6	35	53	0.4	7	109140		Δ
R109.1838.04.7.HV7	0.4	3.8	6.7	6	40	58	0.4	7	109140		Δ
R109.1838.04.8.HV7	0.4	3.8	6.7	6	45	63	0.4	7	109140		▲
L109.1828.04.1.HV6	0.4	2.8	5.7	5	10	28	0.4	6	109140		Δ
L109.1828.04.2.HV6	0.4	2.8	5.7	5	15	33	0.4	6	109140		Δ
L109.1828.04.3.HV6	0.4	2.8	5.7	5	20	38	0.4	6	109140		
L109.1828.04.4.HV6	0.4	2.8	5.7	5	25	43	0.4	6	109140		Δ
L109.1828.04.5.HV6	0.4	2.8	5.7	5	30	48	0.4	6	109140		Δ
L109.1828.04.6.HV6	0.4	2.8	5.7	5	35	53	0.4	6	109140		Δ
L109.1828.04.7.HV6	0.4	2.8	5.7	5	40	58	0.4	6	109140		Δ
L109.1838.04.2.HV7	0.4	3.8	6.7	6	15	33	0.4	7	109140		Δ
L109.1838.04.3.HV7	0.4	3.8	6.7	6	20	38	0.4	7	109140		Δ
L109.1838.04.4.HV7	0.4	3.8	6.7	6	25	43	0.4	7	109140		Δ
L109.1838.04.5.HV7	0.4	3.8	6.7	6	30	48	0.4	7	109140		Δ
L109.1838.04.6.HV7	0.4	3.8	6.7	6	35	53	0.4	7	109140		Δ
L109.1838.04.7.HV7	0.4	3.8	6.7	6	40	58	0.4	7	109140		Δ

P	●
M	●
K	●
N	●
S	●
H	-

刀片
Insert

109

Ø ≥ 6 mm

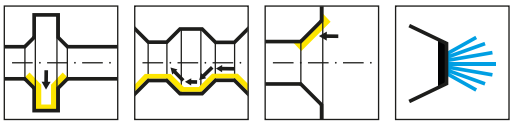

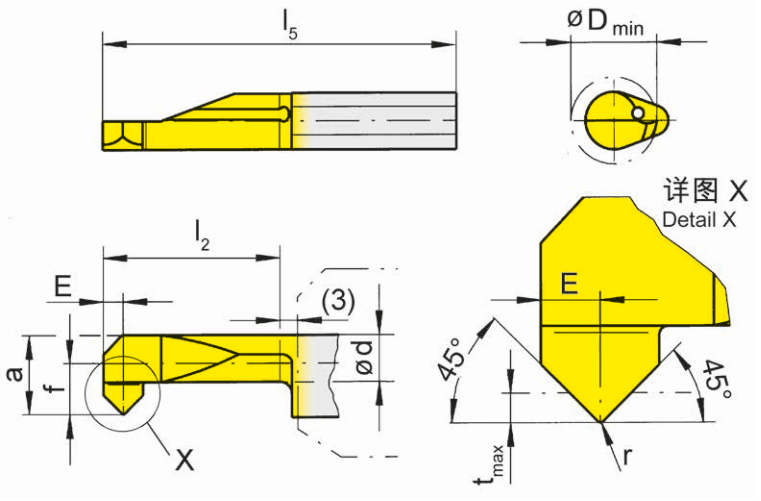

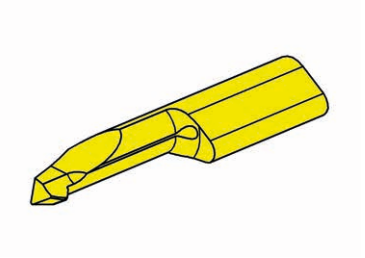

R=右手型-如图
R = right hand version shown

L=左手型
L = left hand version

硬质合金牌号
Carbide grades

▲ 库存
on stock

Δ 4周
4 weeks

产品型号 Part number	r	f	E	a	d	l_2	l_5	t_{max}	D_{min}	HIS		TH35
R109.4545.3.6	0.2	2.8	1.2	5.7	4.3	20	38	0.9	6	109140		Δ
R109.4545.5.7	0.2	3.8	1.2	6.7	5.3	30	48	0.9	7	109140		▲
L109.4545.3.6	0.2	2.8	1.2	5.7	4.3	20	38	0.9	6	109140		Δ
L109.4545.5.7	0.2	3.8	1.2	6.7	5.3	30	48	0.9	7	109140		Δ
											P	●
											M	●
											K	●
											N	●
											S	●
											H	-

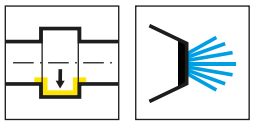

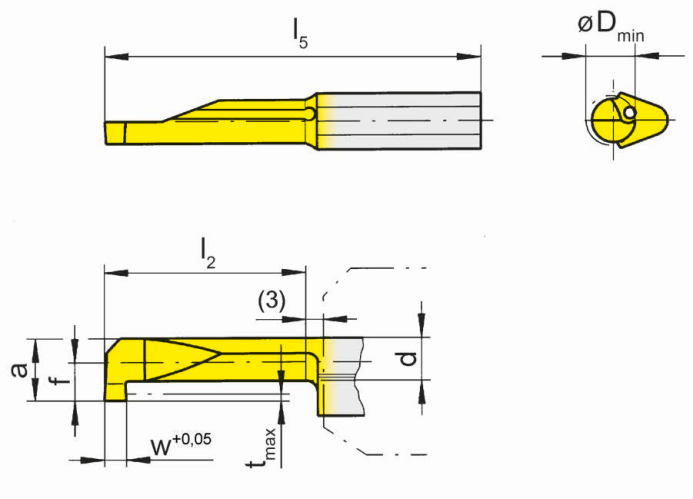

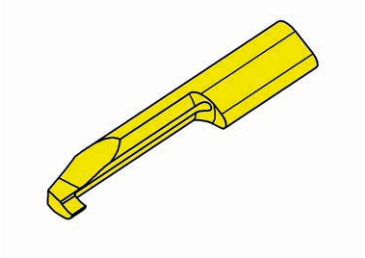

R=右手型-如图
R = right hand version shown

L=左手型
L = left hand version

硬质合金牌号
Carbide grades

▲ 库存
on stock

Δ 4周
4 weeks

产品型号 Part number	w	f	a	d	l_2	l_5	t_{max}	D_{min}	HIS		TH35
R109.0100.1.6	1	2.8	5.7	3.7	10	28	1.8	6	109140		Δ
R109.0150.1.6	1.5	2.8	5.7	3.7	10	28	1.8	6	109140		Δ
R109.0200.1.6	2	2.8	5.7	3.7	10	28	1.8	6	109140		Δ
R109.0100.2.6	1	2.8	5.7	3.7	15	33	1.8	6	109140		Δ
R109.0150.2.6	1.5	2.8	5.7	3.7	15	33	1.8	6	109140		Δ
R109.0200.2.6	2	2.8	5.7	3.7	15	33	1.8	6	109140		Δ
R109.0100.3.6	1	2.8	5.7	3.7	20	38	1.8	6	109140		Δ
R109.0150.3.6	1.5	2.8	5.7	3.7	20	38	1.8	6	109140		Δ
R109.0200.3.6	2	2.8	5.7	3.7	20	38	1.8	6	109140		Δ
L109.0100.1.6	1	2.8	5.7	3.7	10	28	1.8	6	109140		Δ
L109.0150.1.6	1.5	2.8	5.7	3.7	10	28	1.8	6	109140		Δ
L109.0200.1.6	2	2.8	5.7	3.7	10	28	1.8	6	109140		Δ
L109.0100.2.6	1	2.8	5.7	3.7	15	33	1.8	6	109140		Δ
L109.0150.2.6	1.5	2.8	5.7	3.7	15	33	1.8	6	109140		Δ
L109.0200.2.6	2	2.8	5.7	3.7	15	33	1.8	6	109140		Δ
L109.0100.3.6	1	2.8	5.7	3.7	20	38	1.8	6	109140		Δ
L109.0150.3.6	1.5	2.8	5.7	3.7	20	38	1.8	6	109140		Δ
L109.0200.3.6	2	2.8	5.7	3.7	20	38	1.8	6	109140		Δ
										P	●
										M	●
										K	●
										N	●
										S	●
										H	-

刀片
Insert

109

Ø ≥ 6 mm

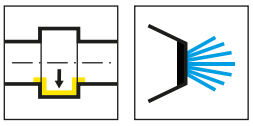

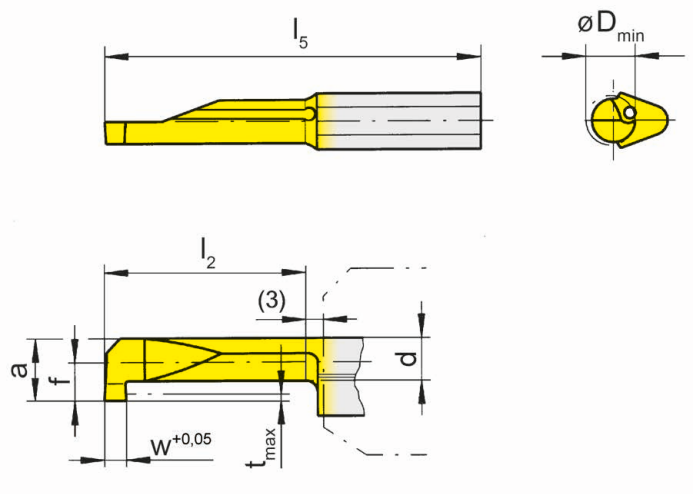

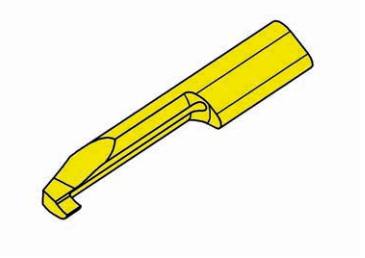

R=右手型-如图
R = right hand version shown

L=左手型
L = left hand version

硬质合金牌号
Carbide grades

▲ 库存
on stock

Δ 4周
4 weeks

产品型号 Part number	w	f	a	d	l_2	l_5	t_{max}	D_{min}	HIS		TH35
R109.0150.4.6	1.5	2.8	5.7	3.7	25	43	1.8	6	109140		Δ
R109.0150.5.6	1.5	2.8	5.7	3.7	30	48	1.8	6	109140		Δ
R109.0150.6.6	1.5	2.8	5.7	3.7	35	53	1.8	6	109140		Δ
R109.0200.1.6	2	2.8	5.7	3.7	10	28	1.8	6	109140		Δ
R109.0200.2.6	2	2.8	5.7	3.7	15	33	1.8	6	109140		Δ
R109.0200.3.6	2	2.8	5.7	3.7	20	38	1.8	6	109140		Δ
R109.0200.4.6	2	2.8	5.7	3.7	25	43	1.8	6	109140		Δ
R109.0200.5.6	2	2.8	5.7	3.7	30	48	1.8	6	109140		Δ
R109.0200.6.6	2	2.8	5.7	3.7	35	53	1.8	6	109140		▲
L109.0150.6.6	1.5	2.8	5.7	3.7	35	53	1.8	6	109140		Δ
L109.0200.1.6	2	2.8	5.7	3.7	10	28	1.8	6	109140		Δ
L109.0200.2.6	2	2.8	5.7	3.7	15	33	1.8	6	109140		Δ
L109.0200.3.6	2	2.8	5.7	3.7	20	38	1.8	6	109140		Δ
L109.0200.4.6	2	2.8	5.7	3.7	25	43	1.8	6	109140		Δ
L109.0200.6.6	2	2.8	5.7	3.7	35	53	1.8	6	109140		Δ
										P	●
										M	●
										K	●
										N	●
										S	●
										H	-

刀片
Insert

109

Ø ≥ 7 mm

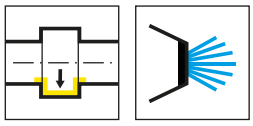

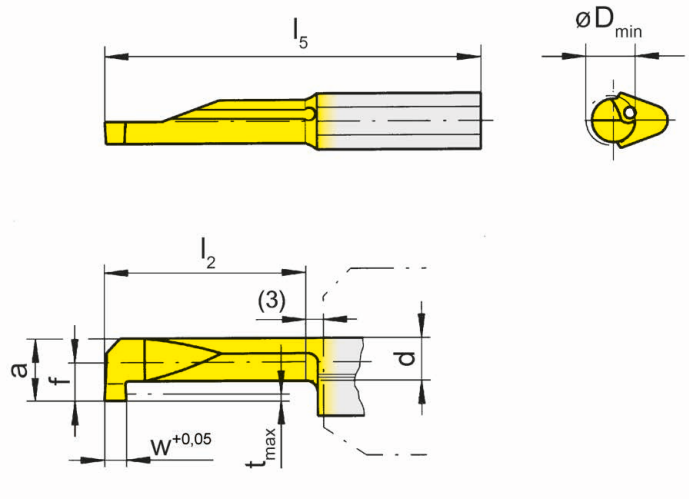

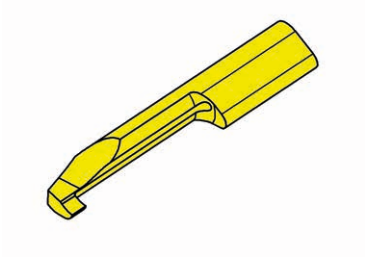

R=右手型-如图
R = right hand version shown

L=左手型
L = left hand version

硬质合金牌号
Carbide grades

▲ 库存
on stock

Δ 4周
4 weeks

产品型号 Part number	w	f	a	d	l_2	l_5	t_{max}	D_{min}	HIS		TH35
R109.0100.1.7	1	3.8	6.7	4	10	28	2.5	7	109140		Δ
R109.0150.1.7	1.5	3.8	6.7	4	10	28	2.5	7	109140		Δ
R109.0200.1.7	2	3.8	6.7	4	10	28	2.5	7	109140		▲
R109.0100.2.7	1	3.8	6.7	4	15	33	2.5	7	109140		Δ
R109.0150.2.7	1.5	3.8	6.7	4	15	33	2.5	7	109140		▲
R109.0200.2.7	2	3.8	6.7	4	15	33	2.5	7	109140		▲
R109.0100.3.7	1	3.8	6.7	4	20	38	2.5	7	109140		Δ
R109.0150.3.7	1.5	3.8	6.7	4	20	38	2.5	7	109140		Δ
R109.0200.3.7	2	3.8	6.7	4	20	38	2.5	7	109140		Δ
L109.0100.1.7	1	3.8	6.7	4	10	28	2.5	7	109140		Δ
L109.0150.1.7	1.5	3.8	6.7	4	10	28	2.5	7	109140		Δ
L109.0200.1.7	2	3.8	6.7	4	10	28	2.5	7	109140		Δ
L109.0100.2.7	1	3.8	6.7	4	15	33	2.5	7	109140		Δ
L109.0150.2.7	1.5	3.8	6.7	4	15	33	2.5	7	109140		Δ
L109.0200.2.7	2	3.8	6.7	4	15	33	2.5	7	109140		Δ
L109.0100.3.7	1	3.8	6.7	4	20	38	2.5	7	109140		Δ
L109.0200.3.7	2	3.8	6.7	4	20	38	2.5	7	109140		Δ
										P	●
										M	●
										K	●
										N	●
										S	●
										H	-

刀片
Insert

109

Ø ≥ 7 mm

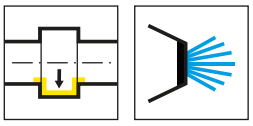

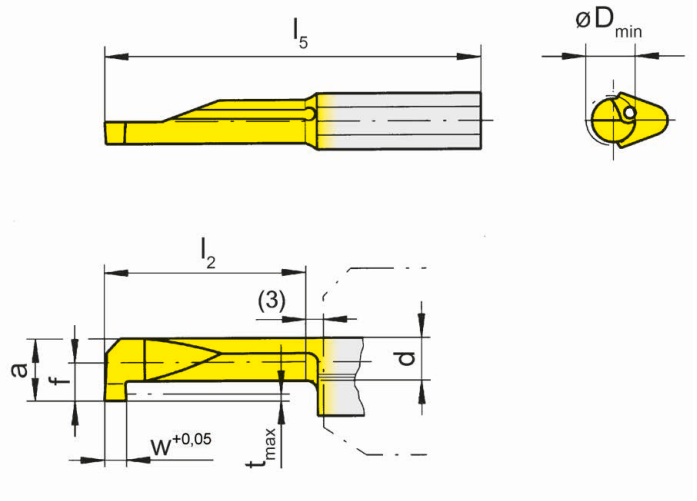

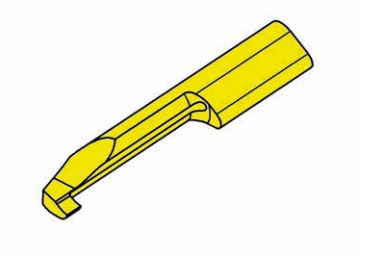

R=右手型-如图
R = right hand version shown

L=左手型
L = left hand version

硬质合金牌号
Carbide grades

▲ 库存
on stock

Δ 4周
4 weeks

产品型号 Part number	w	f	a	d	l_2	l_5	t_{max}	D_{min}	HIS		TH35
R109.0150.4.7	1.5	3.8	6.7	4	25	43	2.5	7	109140		Δ
R109.0150.5.7	1.5	3.8	6.7	4	30	48	2.5	7	109140		Δ
R109.0150.6.7	1.5	3.8	6.7	4	35	53	2.5	7	109140		Δ
R109.0200.1.7	2	3.8	6.7	4	10	28	2.5	7	109140		▲
R109.0200.2.7	2	3.8	6.7	4	15	33	2.5	7	109140		▲
R109.0200.3.7	2	3.8	6.7	4	20	38	2.5	7	109140		Δ
R109.0200.4.7	2	3.8	6.7	4	25	43	2.5	7	109140		Δ
R109.0200.5.7	2	3.8	6.7	4	30	48	2.5	7	109140		▲
R109.0200.6.7	2	3.8	6.7	4	35	53	2.5	7	109140		▲
L109.0150.4.7	1.5	3.8	6.7	4	25	43	2.5	7	109140		Δ
L109.0150.5.7	1.5	3.8	6.7	4	30	48	2.5	7	109140		Δ
L109.0150.6.7	1.5	3.8	6.7	4	35	53	2.5	7	109140		Δ
L109.0200.1.7	2	3.8	6.7	4	10	28	2.5	7	109140		Δ
L109.0200.2.7	2	3.8	6.7	4	15	33	2.5	7	109140		Δ
L109.0200.3.7	2	3.8	6.7	4	20	38	2.5	7	109140		Δ
L109.0200.4.7	2	3.8	6.7	4	25	43	2.5	7	109140		Δ
L109.0200.5.7	2	3.8	6.7	4	30	48	2.5	7	109140		Δ
L109.0200.6.7	2	3.8	6.7	4	35	53	2.5	7	109140		Δ
										P	●
										M	●
										K	●
										N	●
										S	●
										H	-

刀片
Insert

109

Ø ≥ 6 mm

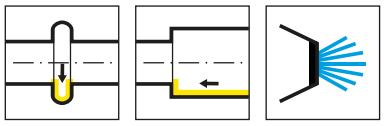

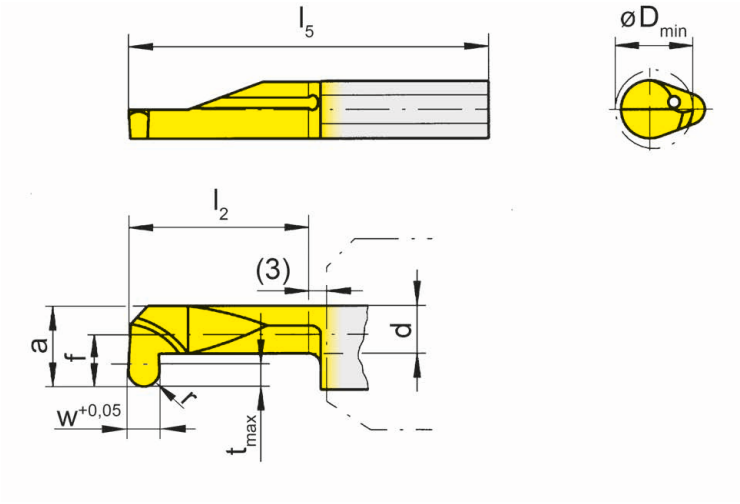

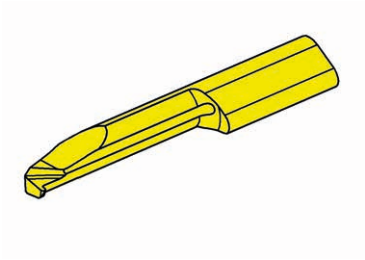

R=右手型-如图
R = right hand version shown

L=左手型
L = left hand version

▲ 库存
on stock

硬质合金牌号
Carbide grades

Δ 4周
4 weeks

产品型号 Part number	w	r	f	a	d	l_2	l_5	t_{max}	D_{min}	HIS		TH35
R109.0005.4.6	1	0.5	2.8	5.7	3.7	25	43	1.8	6	109140		Δ
R109.0007.4.6	1.5	0.75	2.8	5.7	3.7	25	43	1.8	6	109140		Δ
R109.0010.4.6	2	1	2.8	5.7	3.7	25	43	1.8	6	109140		Δ
R109.0005.6.7	1	0.5	3.8	6.7	4	35	53	2.5	7	109140		Δ
R109.0007.6.7	1.5	0.75	3.8	6.7	4	35	53	2.5	7	109140		Δ
R109.0010.6.7	2	1	3.8	6.7	4	35	53	2.5	7	109140		▲
L109.0005.4.6	1	0.5	2.8	5.7	3.7	25	43	1.8	6	109140		Δ
L109.0007.4.6	1.5	0.75	2.8	5.7	3.7	25	43	1.8	6	109140		Δ
L109.0010.4.6	2	1	2.8	5.7	3.7	25	43	1.8	6	109140		Δ
L109.0005.6.7	1	0.5	3.8	6.7	4	35	53	2.5	7	109140		Δ
L109.0007.6.7	1.5	0.75	3.8	6.7	4	35	53	2.5	7	109140		Δ
L109.0010.6.7	2	1	3.8	6.7	4	35	53	2.5	7	109140		Δ
											P	●
											M	●
											K	●
											N	●
											S	●
											H	-

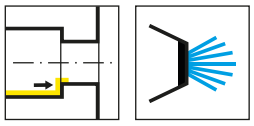

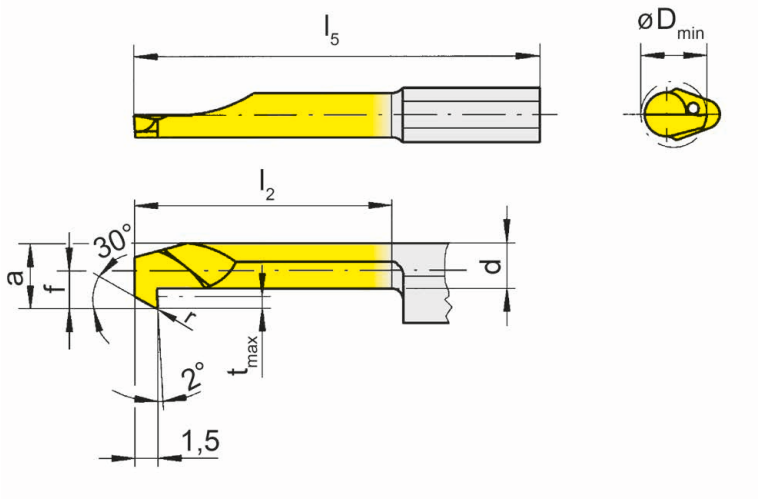

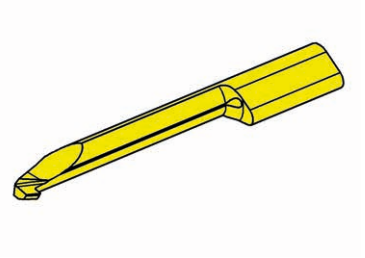

R=右手型-如图
R = right hand version shown

L=左手型
L = left hand version

硬质合金牌号
Carbide grades

▲ 库存
on stock

Δ 4周
4 weeks

产品型号 Part number	r	f	a	d	l_2	l_5	t_{max}	D_{min}	HIS		TH35
R109.3028.3.6	0.2	2.8	5.7	3.7	20	38	1.8	6	109140		Δ
R109.3028.5.6	0.2	2.8	5.7	3.7	30	48	1.8	6	109140		Δ
R109.3038.3.7	0.2	3.8	6.7	4	20	38	2.5	7	109140		▲
R109.3038.5.7	0.2	3.8	6.7	4	30	48	2.5	7	109140		▲
L109.3028.3.6	0.2	2.8	5.7	3.7	20	38	1.8	6	109140		Δ
L109.3028.5.6	0.2	2.8	5.7	3.7	30	48	1.8	6	109140		Δ
L109.3038.3.7	0.2	3.8	6.7	4	20	38	2.5	7	109140		Δ
L109.3038.5.7	0.2	3.8	6.7	4	30	48	2.5	7	109140		
										P	●
										M	●
										K	●
										N	●
										S	●
										H	-

刀片
Insert

109

Ø ≥ 7 mm

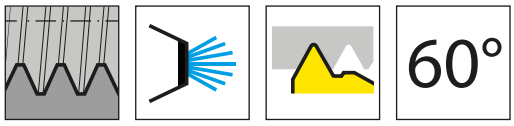

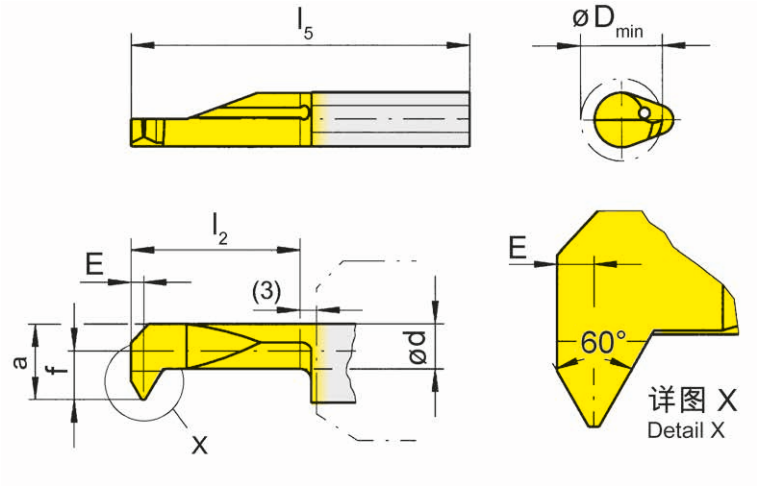

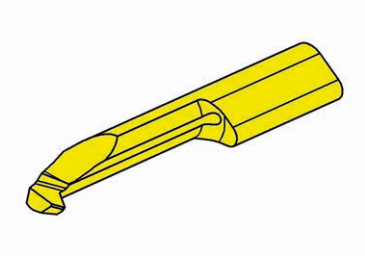

硬质合金牌号
Carbide grades

R=右手型-如图
R = right hand version shown

L=左手型
L = left hand version

▲ 库存
on stock

Δ 4周
4 weeks

产品型号 Part number	P	P_{max}	E	f	a	d	l_2	l_5	D_{min}	HIS		TH35
R109.0815.1.7	1.5	1.75	0.9	3.8	6.7	5.1	10	28	7	109140		Δ
R109.0815.3.7	1.5	1.75	0.9	3.8	6.7	5.1	20	38	7	109140		▲
R109.0815.5.7	1.5	1.75	0.9	3.8	6.7	5.1	30	48	7	109140		▲
L109.0815.1.7	1.5	1.75	0.9	3.8	6.7	5.1	10	28	7	109140		Δ
L109.0815.3.7	1.5	1.75	0.9	3.8	6.7	5.1	20	38	7	109140		Δ
L109.0815.5.7	1.5	1.75	0.9	3.8	6.7	5.1	30	48	7	109140		Δ
											P	●
											M	●
											K	●
											N	●
											S	●
											H	-

刀片
Insert

109

Ø ≥ 6 mm

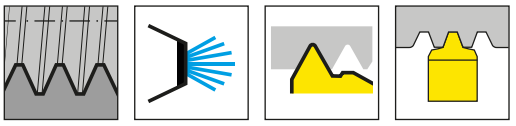

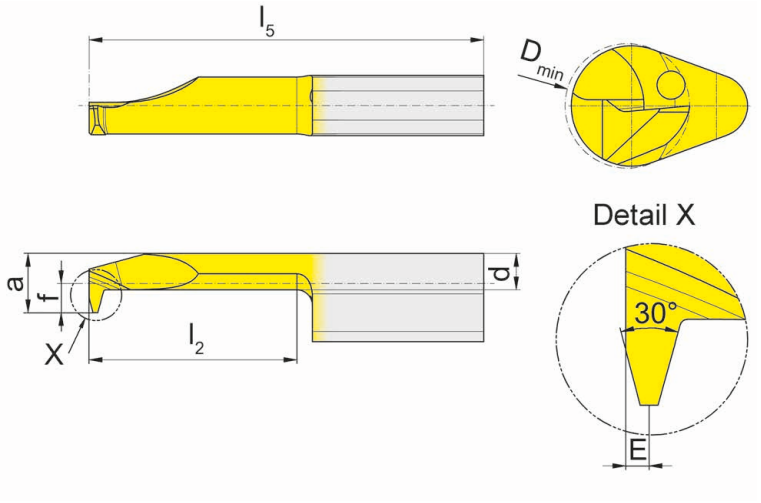

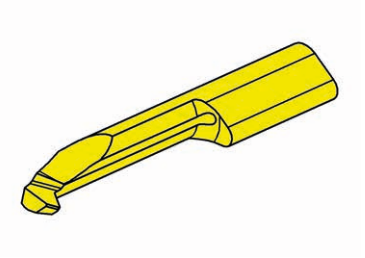

硬质合金牌号
Carbide grades

R = 如图所示为右手版本，只能生产右手螺纹
R = right hand version shown, only right-hand thread can be produced

▲ 库存
on stock

Δ 4周
4 weeks

产品型号 Part number	P	E	f	a	d	l_2	l_5	D_{min}	HIS		TH35
R109.0915.3.6	1.5	0.6	2.8	5.7	3.5	20	38	6	109140		▲
R109.1220.3.6	2	0.8	2.8	5.7	3.5	20	38	6	109140		▲
R109.1220.3.7	2	0.8	3.8	6.7	4.8	20	38	7	109140		▲
R109.1220.5.7	2	0.8	3.8	6.7	4.8	30	48	7	109140		▲
R109.1730.3.7	3	1.2	3.8	6.7	4.3	20	38	7	109140		▲
										P	●
										M	●
										K	●
										N	●
										S	●
										H	-

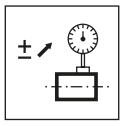

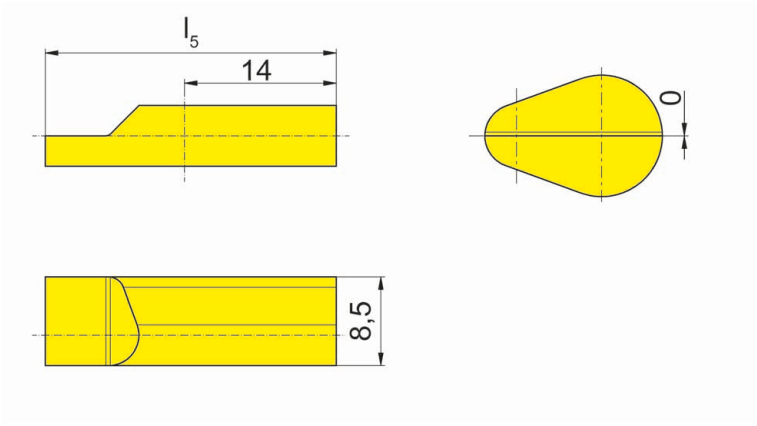

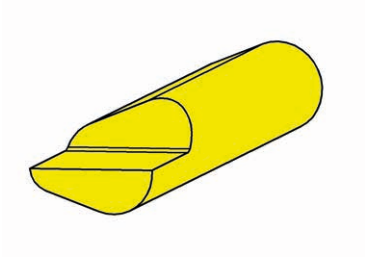

R=右手型-如图
R = right hand version shown

L=左手型
L = left hand version

▲ 库存
on stock

Δ 4周
4 weeks

硬质合金牌号
Carbide grades

产品型号 Part number	l_5	HIS		MG12
R109.LEHR.H.01	28	109140		Δ
L109.LEHR.H.01	28	109140		Δ
			P	o
			M	-
			K	-
			N	-
			S	-
			H	-

刀片用于刀杆的调整
Insert for tool set up

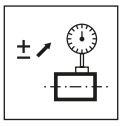

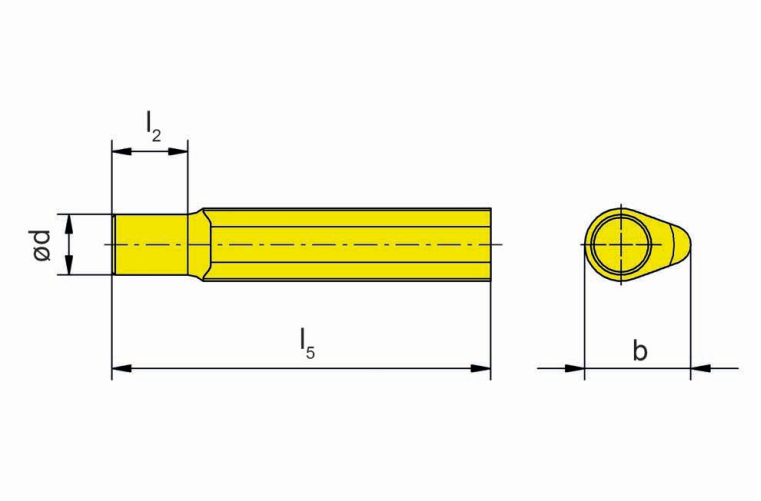

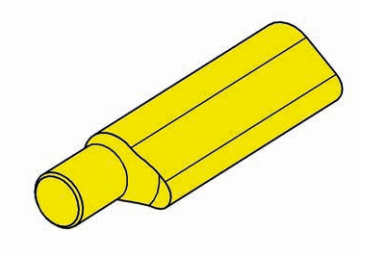

产品型号 Part number	d	b	l_2	l_5	HIS
109.LEHR.D.01	4.5	8.5	5	25	109140

刀片用于刀杆的调整
Insert for tool set up

B109

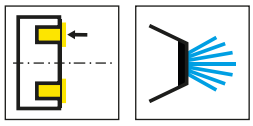

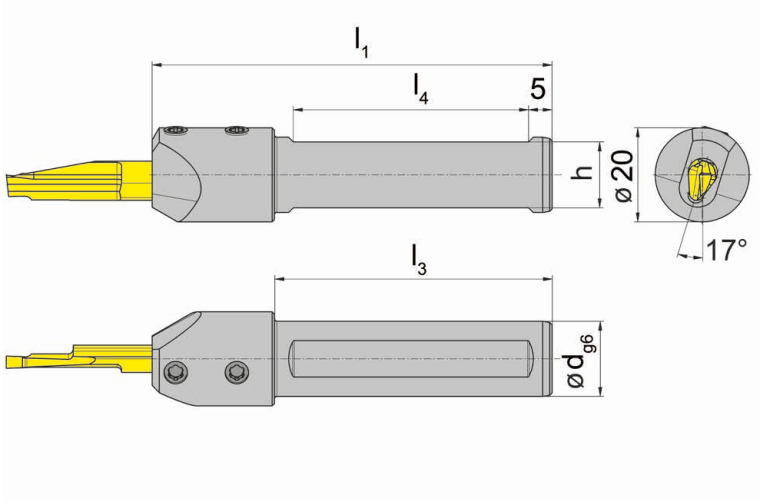

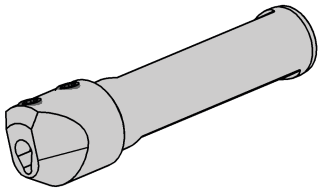

R=右手型-如图
R = right hand version shown

L=左手型
L = left hand version

产品型号 Part number	d	l_1	l_3	h	l_4	HWS
RB109.0016.14.2	16	85	59	14	50	109240
LB109.0016.14.2	16	85	59	14	50	109240

配件
Spare Parts

刀杆 Toolholder	锁紧螺钉 Clamping Screw	TORX PLUS®扳手 TORX PLUS® Wrench
R/LB109.0016.14.2	**6.075T15P**	**T15PQ**

A109

B

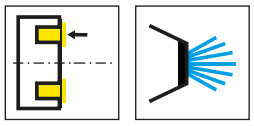

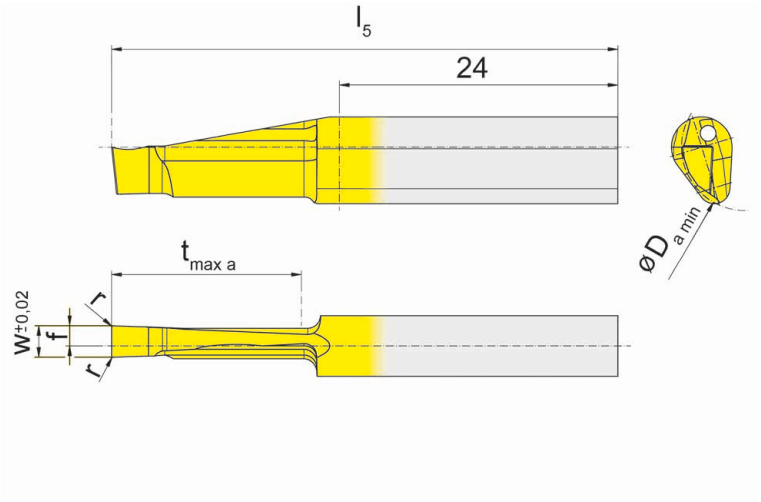

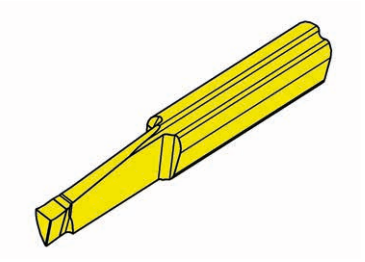

L=左手型-如图
L = left hand version shown

R=右手型
R = right hand version

▲ 库存
on stock

硬质合金牌号
Carbide grades

Δ 4周
4 weeks

产品型号 Part number	w	r	f	l_5	$t_{max\ a}$	$D_{a\ min}$	HIS		TI25
RA109.1520.3.2	2	0.1	1	48	20	15	109240		▲
RA109.1525.3.2	2.5	0.1	1.2	48	20	15	109240		▲
RA109.1530.3.2	3	0.1	1.5	48	20	15	109240		▲
LA109.1520.3.2	2	0.1	1	48	20	15	109240		Δ
LA109.1525.3.2	2.5	0.1	1.2	48	20	15	109240		Δ
LA109.1530.3.2	3	0.1	1.5	48	20	15	109240		▲
								P	●
								M	●
								K	●
								N	●
								S	●
								H	-

Da min在15和40mm之间时，可达到满切情况下的最大切深
Face grooving with full width of the full depth only possible between Da min 15 - 40 mm!

110

C

刀杆和刀片

Toolholder and Inserts

C

刀杆
Toolholder
B110/B110TS/B110C/
VDI/WFB.110

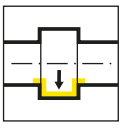

页/Page
170-175, 177

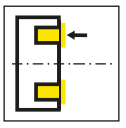

页/Page
186

可调刀杆
Adjustable holder
N

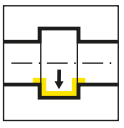

页/Page
176

刀片
Insert
110/A110

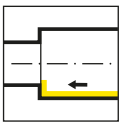

页/Page
178, 182

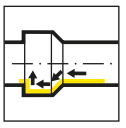

页/Page
179

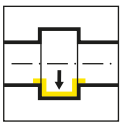

页/Page
180-181

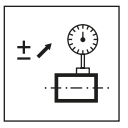

页/Page
183-184

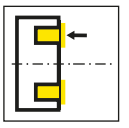

页/Page
187-188

基本规格 型号
Basic sizes

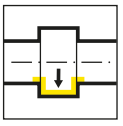

页/Page

C

孔径 Bore Ø	产品线 / Product line											
	105	109	110	106	107	108	10P	111	11P	114	116	18P
≥ 0.2	•											
≥ 0.5	•											
≥ 0.7	•											
≥ 1.0	•											
≥ 1.5	•											
≥ 2.0	•											
≥ 3.0	•											
≥ 4.0	•											
≥ 5.0	•											
≥ 6.0	•	•	•	•								
≥ 6.8		•	•	•								
≥ 7.0		•			•							
≥ 7.8			•		•	•						
≥ 8.0			•		•	•						
≥ 9.0			•		•	•	•					
≥ 10.0			•				•	•	•			
≥ 10.5									•			
≥ 11.0								•	•			
≥ 11.5									•			
≥ 13.8										•		
≥ 14.0										•	•	
≥ 16.0											•	
≥ 16.5										(•)		
≥ 18.0												•
槽深 Depth of groove	2.5	2.5	4.0	0.8	2.0	1.0	3.0	2.3	3.5	4.0 (6.5)	4.3	8.0
槽宽 Width of groove	0.5- 2.0	1.0- 2.0	1.0- 3.0	0.7- 1.5	1.0- 2.0	0.7- 2.0	1.0- 3.0	0.7- 3.0	1.0- 3.0	0.7- 3.0	0.7- 4.0	2.0- 3.0
加工 / Machining												
切槽 Grooving	•	•	•	•	•	•	•	•	•	•	•	•
镗孔 Boring	•	•	•	•	•	•		•		•	•	
螺纹切削 Threading	•	•			•	•		•		•	•	
倒角 Chamfering	•	•			•	•		•		•	•	
端面切槽 Face Grooving	•	•	•							•		
镗孔和仿形加工 Boring and Profiling	•											

B110

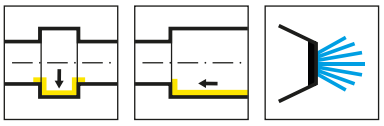

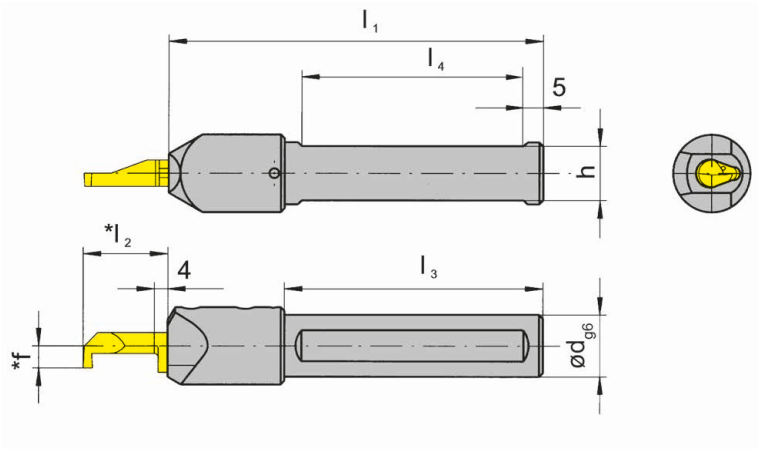

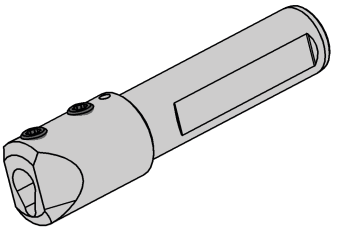

图示=右手型
Picture = right hand cutting version

产品型号 Part number	d	l_1	l_3	h	l_4	HWS
B110.0016.02	16	100	70	14	55	110260
B110.0020.02	20	100	-	18	55	110260
B110.0022.02	22	100	-	20	55	110260
B110.0025.02	25	100	-	23	55	110260

f,l2见110系列刀片
f, l2 see inserts type 110

配件
Spare Parts

刀杆 Toolholder	锁紧螺钉 Clamping Screw	TORX PLUS®扳手 TORX PLUS® Wrench
B110...	**6.075T15P**	**T15PQ**

B110

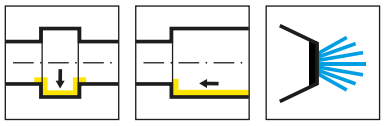

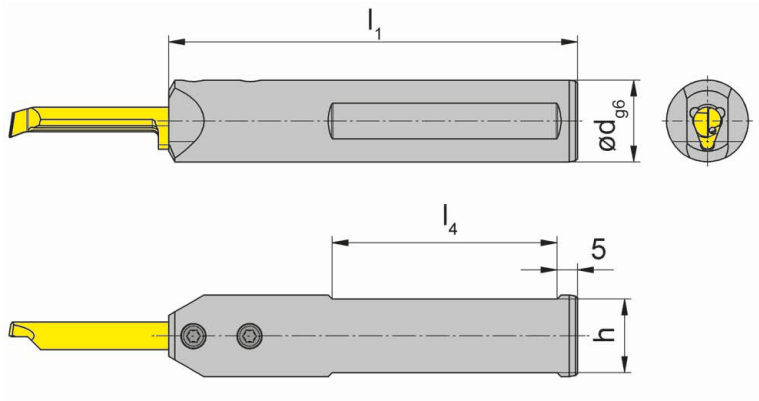

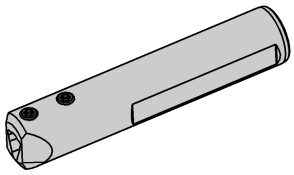

图示=右手型
Picture = right hand cutting version

产品型号 Part number	d	l_1	h	l_4	HWS
B110.0020.K.02	20	100	18	55	110260

配件
Spare Parts

刀杆 Toolholder	锁紧螺钉 Clamping Screw	TORX PLUS®扳手 TORX PLUS® Wrench
B110.0020.K.02	**6.075T15P**	**T15PQ**

B110TS

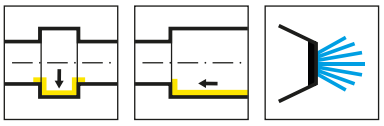

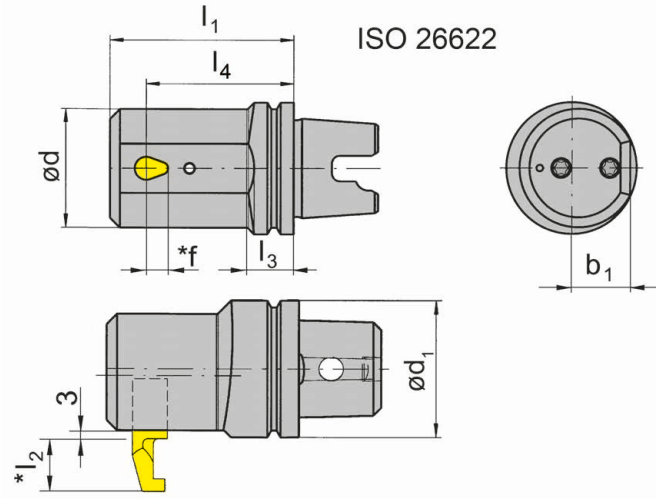

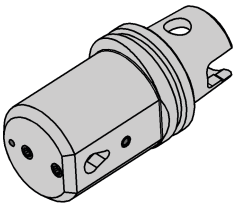

R=右手型-如图
R = right hand version shown

产品型号 Part number	d_1	l_3	d	l_1	b_1	l_4	机床型号 Machine type	HWS
RB110.TS40.2.2.02	40	14	36	56	18	45	INDEX MS32	110260

f,l2见110系列刀片
f, l2 see inserts type 110

用于INDEX多主轴机床
for INDEX Multi spindle machines

配件
Spare Parts

刀杆 Toolholder	**锁紧螺钉** Clamping Screw	**TORX PLUS®扳手** TORX PLUS® Wrench
RB110.TS40.2.2.02	**6.075T15P**	**T15PQ**

B110C

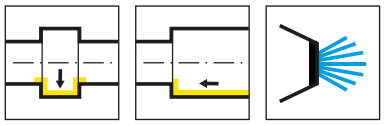

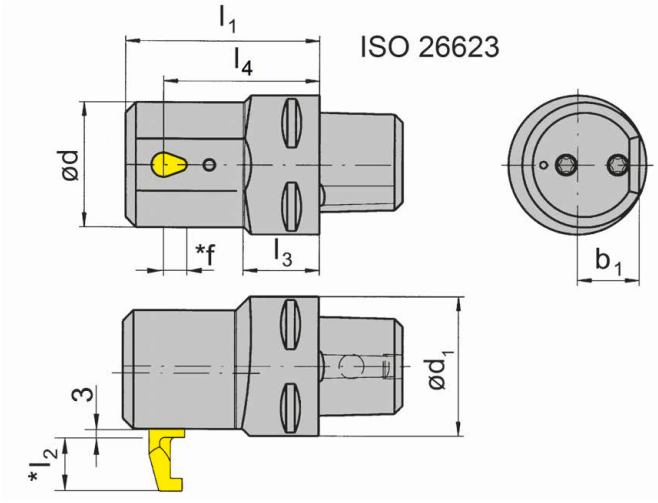

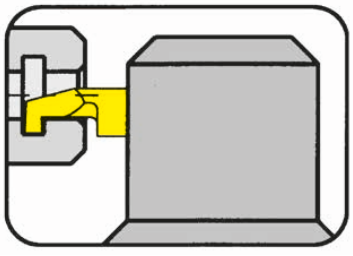

R=右手型-如图
R = right hand version shown

产品型号 Part number	d_1	l_3	d	l_1	b_1	l_4	机床型号 Machine type	HWS
RB110.00C3.2.2.02	32	15	36	56	18	45	INDEX MS32	110260
RB110.00C4.2.2.02	40	22	36	56	18	45	INDEX MS52	110260

f,l2见110系列刀片
f, l2 see inserts type 110

用于INDEX多主轴机床
for INDEX Multi spindle machines

配件
Spare Parts

刀杆 Toolholder	锁紧螺钉 Clamping Screw	TORX PLUS®扳手 TORX PLUS® Wrench
RB110...	**6.075T15P**	**T15PQ**

B110C

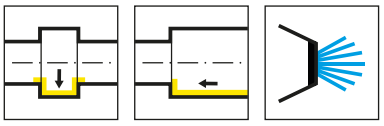

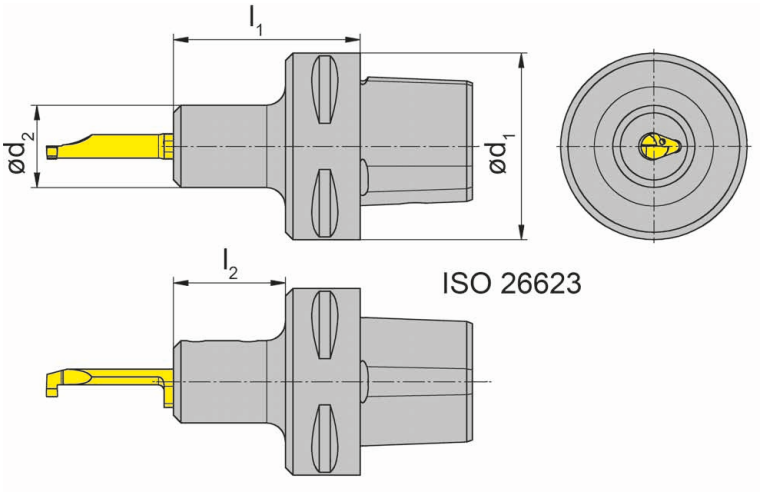

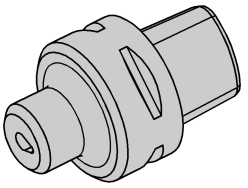

R=右手型-如图
R = right hand version shown

L=左手型
L = left hand version

产品型号 Part number	d_1	d_2	l_1	l_2	HWS
RB110.00C3.22.1.02	32	22	45	30	110260
RB110.00C4.22.1.02	40	22	50	30	110260
RB110.00C5.22.1.02	50	22	50	30	110260
RB110.00C6.22.1.02	63	22	52	30	110260
LB110.00C3.22.1.02	32	22	45	30	110260
LB110.00C4.22.1.02	40	22	50	30	110260
LB110.00C5.22.1.02	50	22	50	30	110260
LB110.00C6.22.1.02	63	22	52	30	110260

配件
Spare Parts

刀杆 Toolholder	锁紧螺钉 Clamping Screw	TORX PLUS®扳手 TORX PLUS® Wrench
R/LB110...	**6.075T15P**	**T15PQ**

VDI

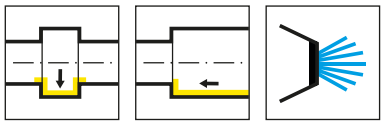

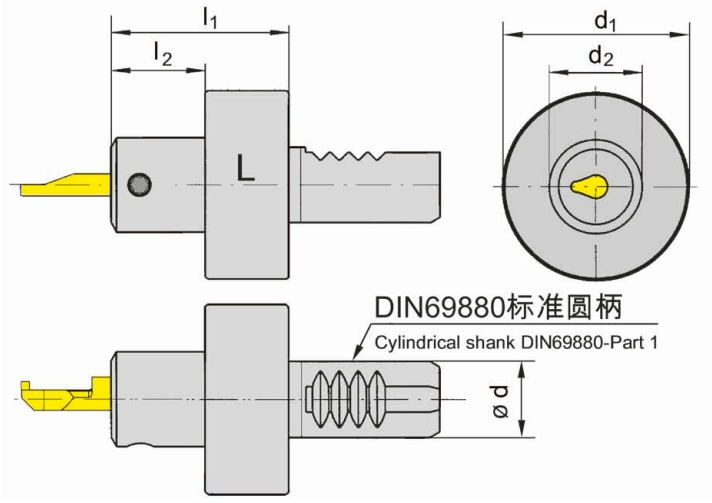

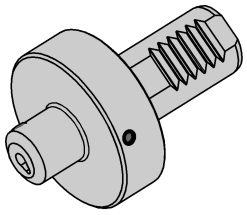

L=左手型-如图
L = left hand version shown

R=右手型
R = right hand version

产品型号 Part number	d	l_1	l_2	d_2	d_1	HWS
VDI16.L110.30.02	16	48	30	22	40	110260
VDI16.R110.30.02	16	48	30	22	40	110260
VDI20.R110.30.02	20	48	30	22	50	110260
VDI25.L110.30.02	25	48	30	22	58	110260
VDI25.R110.30.02	25	48	30	22	58	110260
VDI30.L110.30.02	30	48	30	22	68	110260
VDI30.R110.30.02	30	48	30	22	68	110260
VDI40.L110.30.02	40	48	30	22	83	110260
VDI40.R110.30.02	40	48	30	22	83	110260

配件
Spare Parts

刀杆 Toolholder	**锁紧螺钉** Clamping Screw	**TORX PLUS®扳手** TORX PLUS® Wrench
VDI16...	**6.075T15P**	**T15PQ**

可调刀杆
Adjustable holder

N

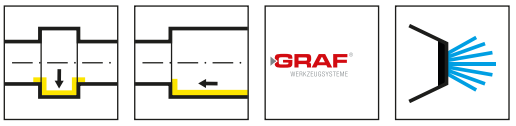

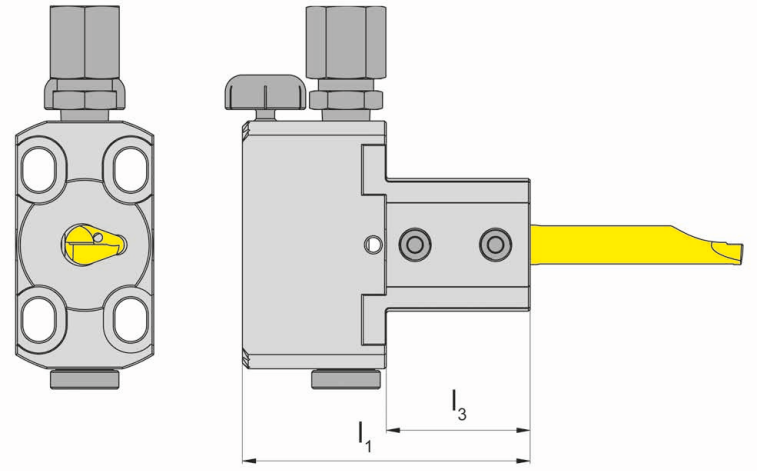

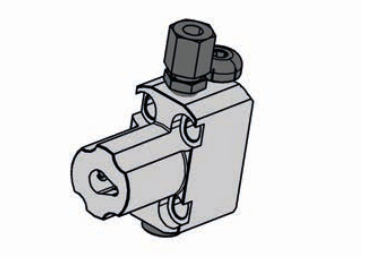

图示=右手型
Picture = right hand cutting version

产品型号 Part number	l_1	l_3	HWS
N.79.IK	50	25	110260

不包含冷却液管-需要单独订购！
Coolant tube is not included - separate order required!

配件
Spare Parts

可调刀杆 Adjustable holder	**锁紧螺钉** Clamping Screw	**冷却液供应** Coolant supply
N.79.IK	**6.075T15P**	**004.00.19**

WFB.110

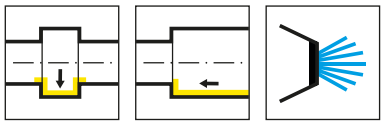

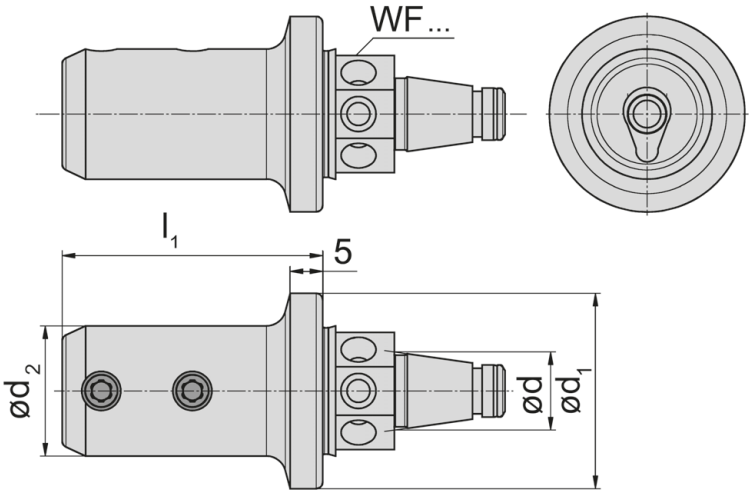

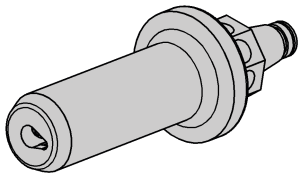

产品型号 Part number	d_1	l_1	d	d_2	HWS	HMS
WFB.2HO.110	30	40	12	20	110260	WFB
WFB.3HO.110	50	40	20	20	110260	WFB

配件
Spare Parts

刀杆 Toolholder	锁紧螺钉 Clamping Screw	TORX PLUS®扳手 TORX PLUS® Wrench
WFB...	**6.075T15P**	**T15PQ**

C

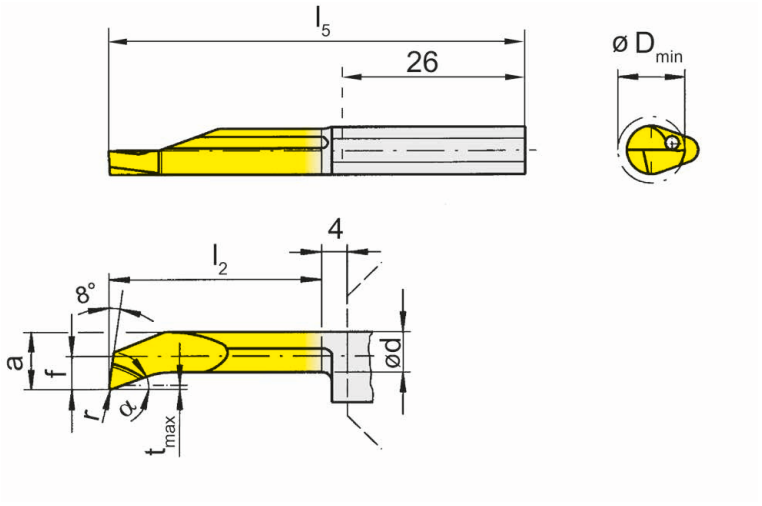

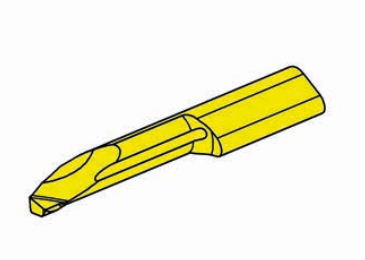

硬质合金牌号
Carbide grades

R=右手型-如图
R = right hand version shown

L=左手型
L = left hand version

▲ 库存
on stock

Δ 4周
4 weeks

产品型号 Part number	r	f	a	d	l_2	l_5	t_{max}	D_{min}	α	HIS		EG35	TH35	TI25
R110.1829.7.6	0.2	2.9	5.7	4.8	40	70	0.5	6	21°	110260		▲	▲	▲
R110.1829.9.6	0.2	2.9	5.7	4.8	50	80	0.5	6	21°	110260		▲	▲	▲
R110.1829.9.8	0.2	4	7.4	6	50	80	0.5	8	21°	110260		▲	▲	▲
L110.1829.7.6	0.2	2.9	5.7	4.8	40	70	0.5	6	21°	110260		▲	▲	▲
L110.1829.9.6	0.2	2.9	5.7	4.8	50	80	0.5	6	21°	110260		▲	▲	▲
L110.1829.9.8	0.2	4	7.4	6	50	80	0.5	8	21°	110260		▲	▲	▲
											P	●	●	●
											M	●	●	●
											K	o	●	●
											N	-	●	●
											S	-	●	●
											H	-	-	-

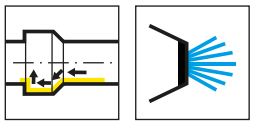

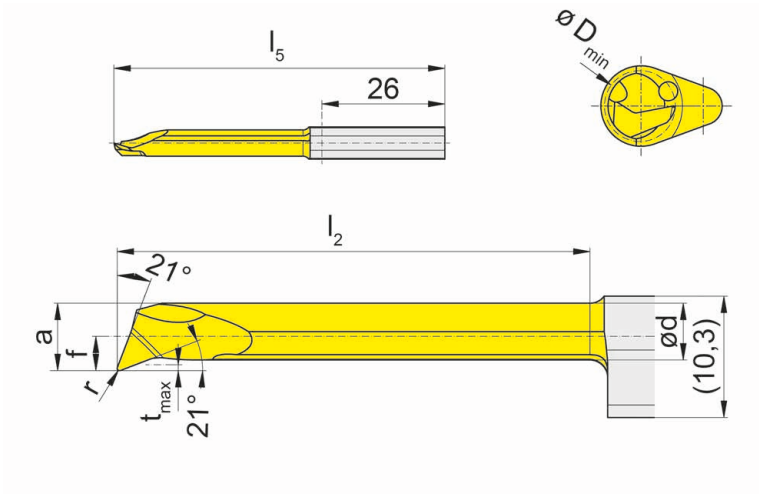

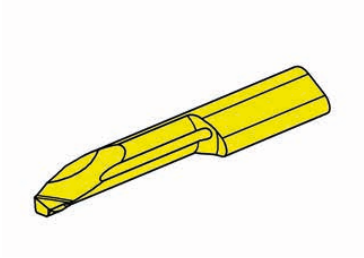

R=右手型-如图
R = right hand version shown

L=左手型
L = left hand version

硬质合金牌号
Carbide grades

▲ 库存
on stock

Δ 4周
4 weeks

产品型号 Part number	r	f	a	d	l_2	l_5	t_{max}	D_{min}	HIS		EG35
R110.2129.7.6	0.2	2.9	5.7	4.8	40	70	0.5	6	110260		Δ
R110.2129.9.6	0.2	2.9	5.7	4.8	50	80	0.5	6	110260		Δ
R110.2140.7.8	0.2	4	7.4	6	40	70	0.5	8	110260		Δ
R110.2140.9.8	0.2	4	7.4	6	50	80	0.5	8	110260		Δ
L110.2129.7.6	0.2	2.9	5.7	4.8	40	70	0.5	6	110260		Δ
L110.2129.9.6	0.2	2.9	5.7	4.8	50	80	0.5	6	110260		Δ
L110.2140.7.8	0.2	4	7.4	6	40	70	0.5	8	110260		Δ
L110.2140.9.8	0.2	4	7.4	6	50	80	0.5	8	110260		Δ
										P	●
										M	●
										K	o
										N	-
										S	-
										H	-

刀片
Insert

110

Ø ≥ 8 mm

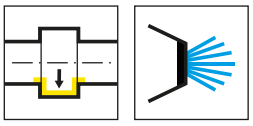

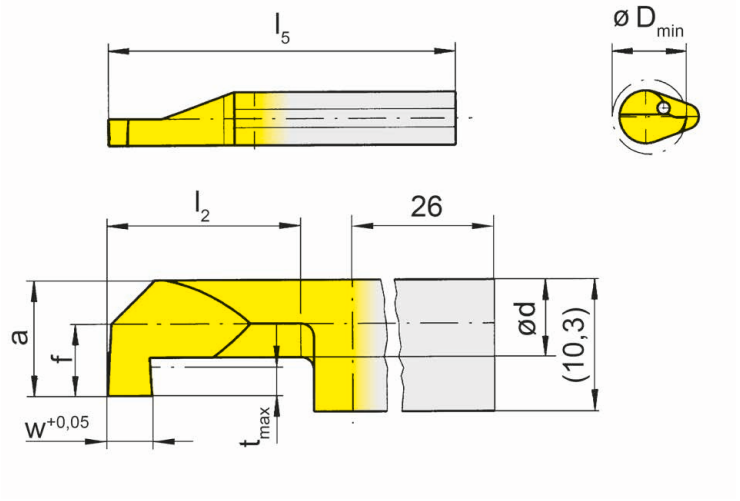

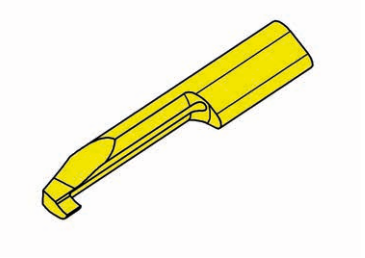

R=右手型-如图
R = right hand version shown

L=左手型
L = left hand version

▲ 库存
on stock

Δ 4周
4 weeks

硬质合金牌号
Carbide grades

产品型号 Part number	w	f	a	d	l_2	l_5	t_{max}	D_{min}	HIS	EG35	TI25	TN35
R110.0100.5.8	1	4	7.4	4.2	30	60	2.8	8	110260	▲		▲
R110.0200.5.8	2	4	7.4	4.2	30	60	2.8	8	110260	▲	Δ	▲
R110.0250.5.8	2.5	4	7.4	4.2	30	60	2.8	8	110260	▲	Δ	▲
R110.0100.7.8	1	4	7.4	4.2	40	70	2.8	8	110260	▲		▲
R110.0200.7.8	2	4	7.4	4.2	40	70	2.8	8	110260	▲		▲
R110.0250.7.8	2.5	4	7.4	4.2	40	70	2.8	8	110260	▲		▲
R110.0100.5.0	1	6	9.4	5	30	60	4	10	110260	▲		▲
R110.0200.5.0	2	6	9.4	5	30	60	4	10	110260	▲	Δ	▲
R110.0300.5.0	3	6	9.4	5	30	60	4	10	110260	▲	Δ	▲
R110.0100.9.0	1	6	9.4	5	50	80	4	10	110260	Δ		▲
R110.0200.9.0	2	6	9.4	5	50	80	4	10	110260	▲		▲
R110.0300.9.0	3	6	9.4	5	50	80	4	10	110260	▲		▲
L110.0100.5.8	1	4	7.4	4.2	30	60	2.8	8	110260			▲
L110.0200.5.8	2	4	7.4	4.2	30	60	2.8	8	110260	▲		▲
L110.0250.5.8	2.5	4	7.4	4.2	30	60	2.8	8	110260	▲		▲
L110.0100.7.8	1	4	7.4	4.2	40	70	2.8	8	110260	Δ		▲
L110.0200.7.8	2	4	7.4	4.2	40	70	2.8	8	110260	▲		▲
L110.0250.7.8	2.5	4	7.4	4.2	40	70	2.8	8	110260	Δ		▲
L110.0100.5.0	1	6	9.4	5	30	60	4	10	110260	▲		▲
L110.0200.5.0	2	6	9.4	5	30	60	4	10	110260	▲		▲
L110.0300.5.0	3	6	9.4	5	30	60	4	10	110260	▲		▲
L110.0100.9.0	1	6	9.4	5	50	80	4	10	110260	Δ		Δ
L110.0200.9.0	2	6	9.4	5	50	80	4	10	110260	Δ		▲
L110.0300.9.0	3	6	9.4	5	50	80	4	10	110260	Δ		Δ

	EG35	TI25	TN35
P	●	●	●
M	●	●	●
K	o	●	●
N	-	●	●
S	-	●	●
H	-	-	-

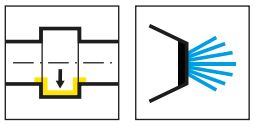

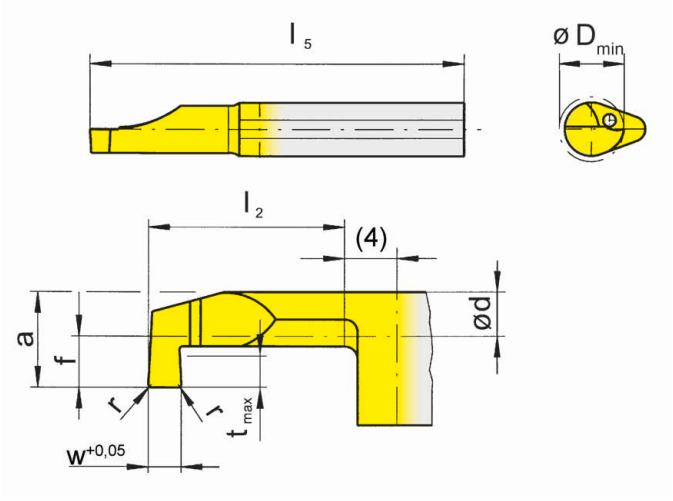

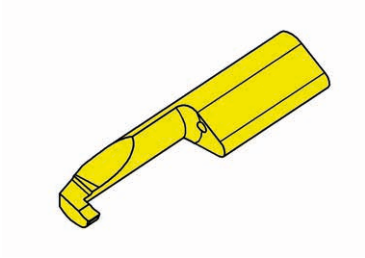

R=右手型-如图
R = right hand version shown

硬质合金牌号
Carbide grades

▲ 库存
on stock

Δ 4周
4 weeks

产品型号 Part number	w	r	f	a	d	l_2	l_5	t_{max}	D_{min}	HIS		EG35	TN35
R110.0200.02.3.8	2	0.2	4	7.4	4.2	20	50	2.8	8	110260		▲	▲
											P	●	●
											M	●	●
											K	o	●
											N	-	●
											S	-	●
											H	-	-

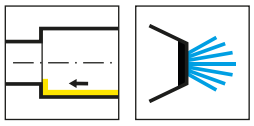

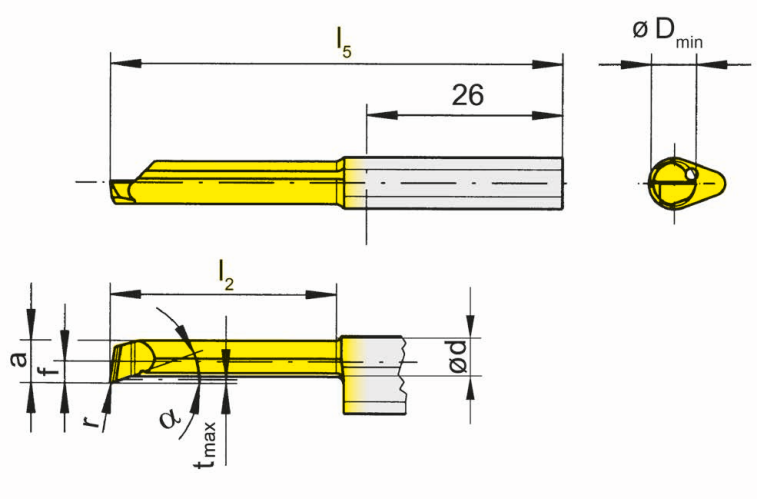

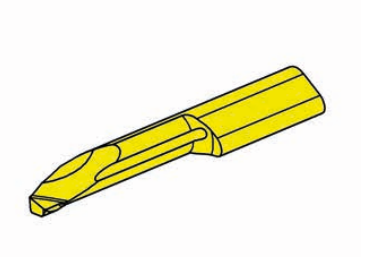

硬质合金牌号
Carbide grades

R=右手型-如图
R = right hand version shown

▲ 库存
on stock

Δ 4周
4 weeks

产品型号 Part number	r	f	a	d	l_2	l_5	t_{max}	D_{min}	α	HIS		EG35	TI25
R110.1829.9.H6	0.2	2.9	5.7	4.8	50	80	0.5	6	20°	110260		▲	▲
R110.1829.9.H8	0.2	4	7.4	6	50	80	0.5	8	20°	110260		▲	▲
											P	●	●
											M	●	●
											K	o	●
											N	-	●
											S	-	●
											H	-	-

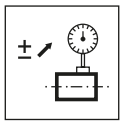

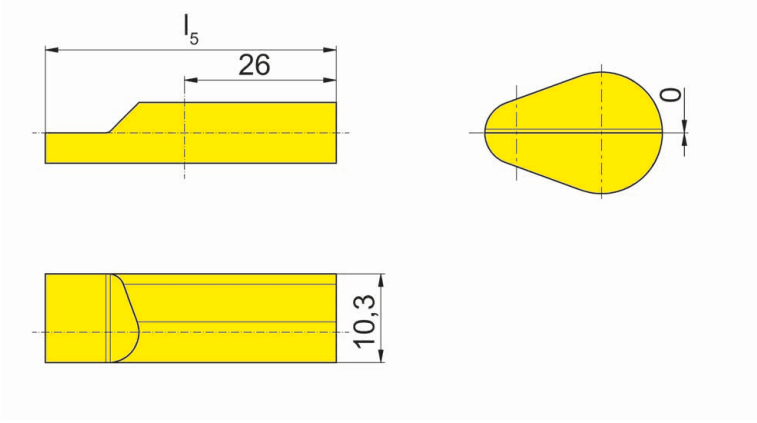

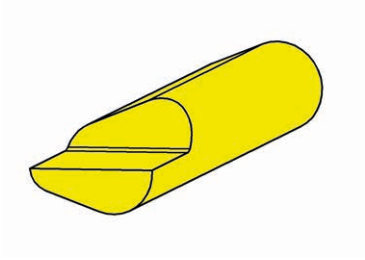

R=右手型-如图
R = right hand version shown

L=左手型
L = left hand version

产品型号 Part number	l_5	HIS
R110.LEHR.H02	40	110140
L110.LEHR.H02	40	110140

刀片用于刀杆的调整
Insert for tool set up

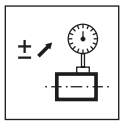

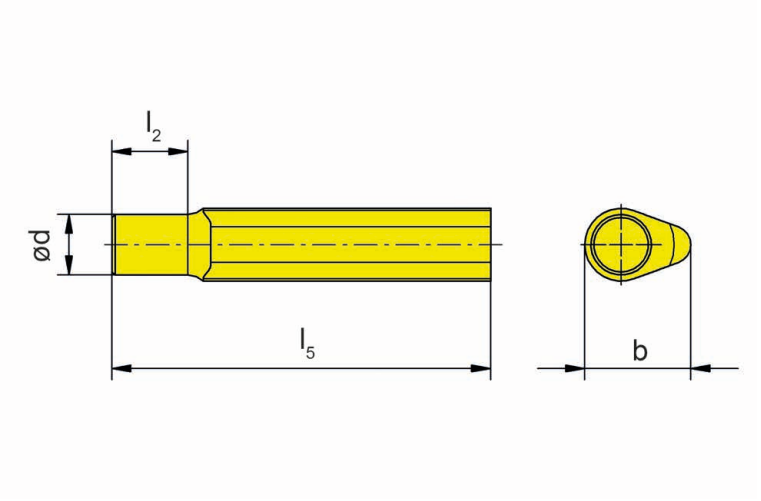

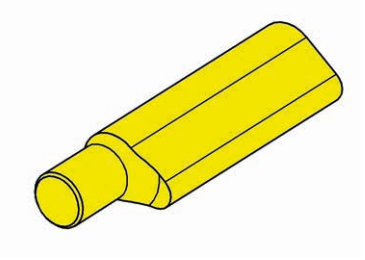

产品型号 Part number	d	b	l_2	l_5	HIS
110.LEHR.D.01	5	10,3	5	25	110140

刀片用于刀杆的调整
Insert for tool set up

基本规格 型号
Basic sizes

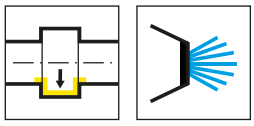

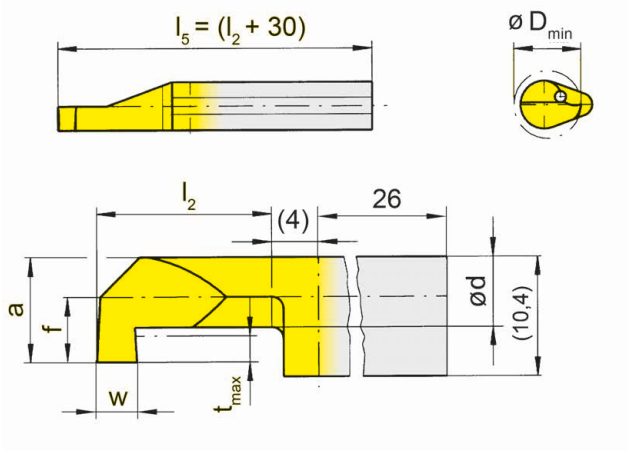

产品型号 Part number	f	a	d	t_{max}	D_{min}	w	l_2	代码 Code		MG12	TN35	TI25	TH35
110...8	4	7.4	4.2	2.8	8	0.5-3.0	10 15 20 25 30	1 2 3 4 5		按照要求 Upon Request			
110...9	5	8.4	4.8	3.5	9		35	6					
110...0	6	9.4	5.2	4.0	10		40	7					

如何订购:
Ordering example:

R110.0160.3.9 $^{+0.05}$ r 0.2 (硬质合金牌号 / Carbide grade)

- 圆角半径 / Corner radius
- 公差 w / Tolerance w
- Ø D_{min}
- l_2 (代码 / Code)
- 槽宽 w / width of groove w
- 型号 / type
- 型 / Version

B110

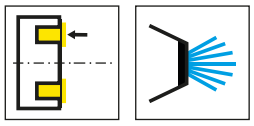

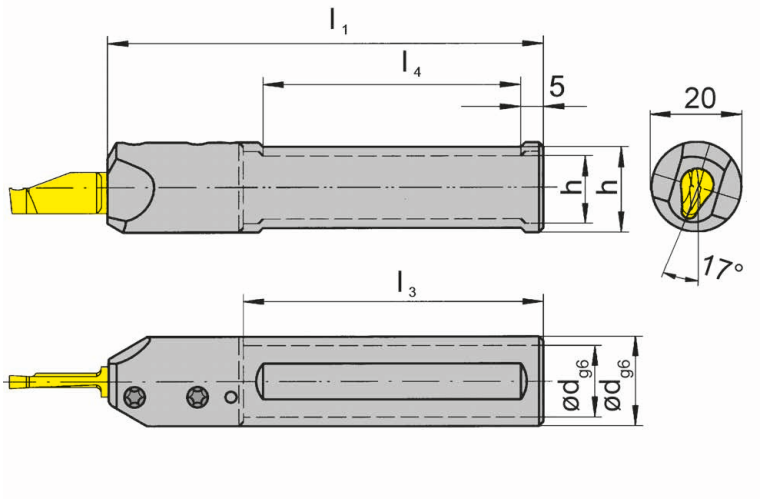

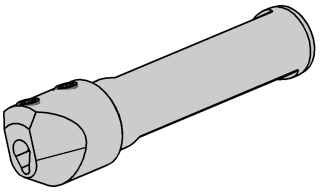

R=右手型-如图
R = right hand version shown

L=左手型
L = left hand version

产品型号 Part number	d	l_1	l_3	h	l_4	HWS
RB110.0016.16.2	16	100	70	14	55	110260
RB110.0020.16.2	20	100	-	18	55	110260
LB110.0016.16.2	16	100	70	14	55	110260
LB110.0020.16.2	20	100	-	18	55	110260

配件
Spare Parts

刀杆 Toolholder	锁紧螺钉 Clamping Screw	TORX PLUS®扳手 TORX PLUS® Wrench
R/LB110...	**6.075T15P**	**T15PQ**

A110

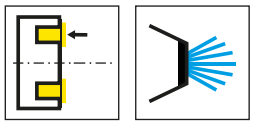

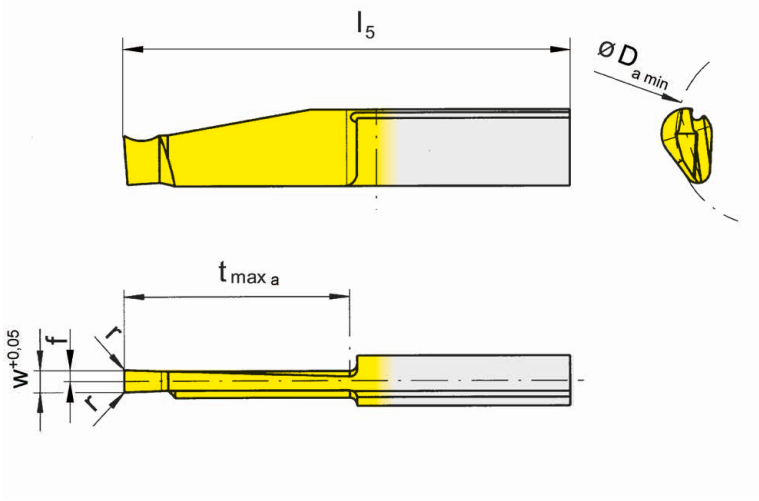

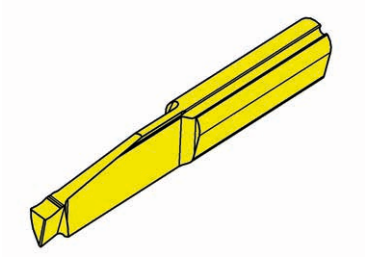

L=左手型-如图
L = left hand version shown

R=右手型
R = right hand version

硬质合金牌号
Carbide grades

▲ 库存
on stock

Δ 4周
4 weeks

产品型号 Part number	w	r	f	l_5	$t_{max\,a}$	$D_{a\,min}$	HIS		EG35	TH35	TI25	TN35
RA110.2030.3.0	3	0.2	1.5	50	20	20	110260		▲	▲	▲	▲
RA110.2030.5.0	3	0.2	1.5	60	30	20	110260		▲	▲	▲	▲
RA110.5030.3.0	3	0.2	1.5	50	20	50	110260		▲		▲	
RA110.5030.5.0	3	0.2	1.5	60	30	50	110260		▲		▲	
LA110.2030.3.0	3	0.2	1.5	50	20	20	110260		▲	▲	▲	▲
LA110.2030.5.0	3	0.2	1.5	60	30	20	110260		▲	▲	▲	▲
LA110.5030.3.0	3	0.2	1.5	50	20	50	110260		▲		▲	
LA110.5030.5.0	3	0.2	1.5	60	30	50	110260		▲		▲	
								P	●	●	●	●
								M	●	●	●	●
								K	o	●	●	●
								N	-	●	●	●
								S	-	●	●	●
								H	-	-	-	-

A110

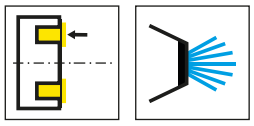

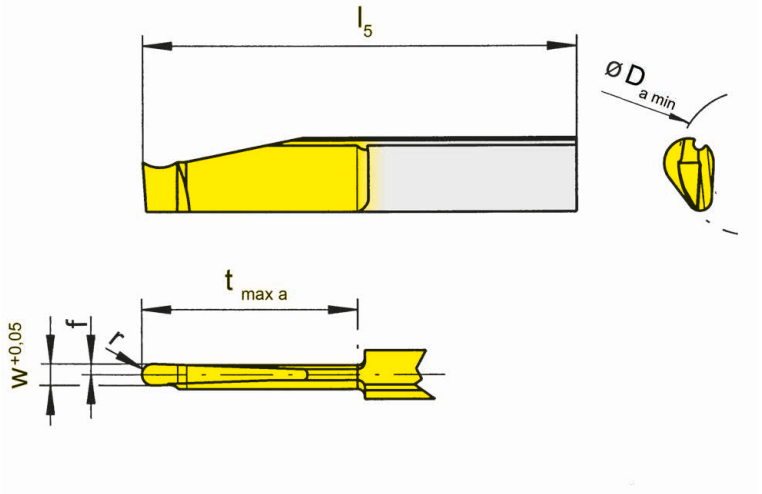

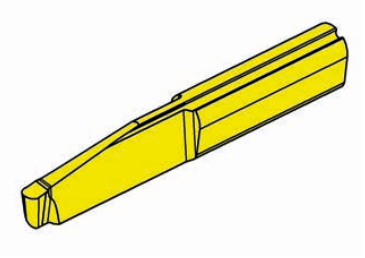

L=左手型-如图
L = left hand version shown

R=右手型
R = right hand version

▲ 库存
on stock

硬质合金牌号
Carbide grades

Δ 4周
4 weeks

产品型号 Part number	w	r	f	l_5	$t_{max\ a}$	$D_{a\ min}$	HIS	EG35	TN35
RA110.2030.15.5.0	3	1.5	1.5	60	30	20	110260	▲	▲
LA110.2030.15.5.0	3	1.5	1.5	60	30	20	110260	▲	▲

	EG35	TN35
P	●	●
M	●	●
K	o	●
N	-	●
S	-	●
H	-	-

106

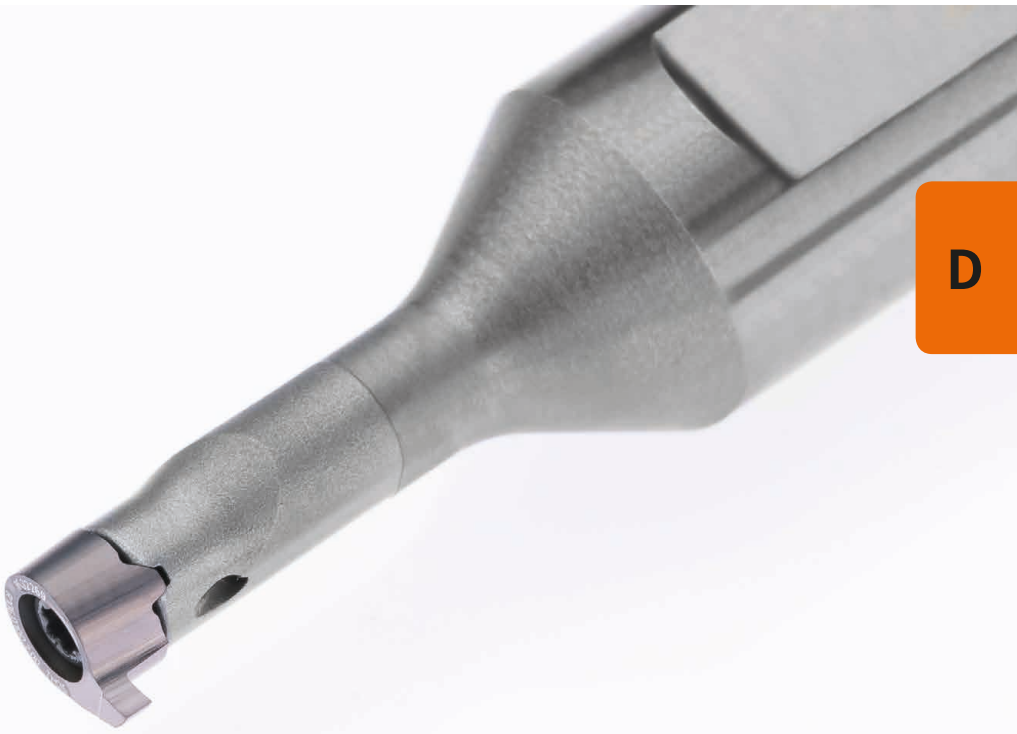

D

刀杆和刀片

Toolholder and Inserts

刀杆
Toolholder
B106

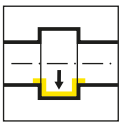

页/Page
192

刀片
Insert
106

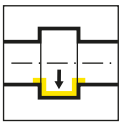

页/Page
193

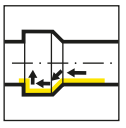

页/Page
194

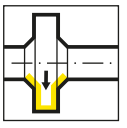

页/Page
195

D

孔径 Bore Ø	产品线 / Product line											
	105	109	110	106	107	108	10P	111	11P	114	116	18P
≥ 0.2	•											
≥ 0.5	•											
≥ 0.7	•											
≥ 1.0	•											
≥ 1.5	•											
≥ 2.0	•											
≥ 3.0	•											
≥ 4.0	•											
≥ 5.0	•											
≥ 6.0	•	•	•	•								
≥ 6.8		•	•	•								
≥ 7.0		•			•							
≥ 7.8			•		•	•						
≥ 8.0			•		•	•						
≥ 9.0			•		•	•	•					
≥ 10.0			•				•	•	•			
≥ 10.5									•			
≥ 11.0								•	•			
≥ 11.5									•			
≥ 13.8										•		
≥ 14.0										•	•	
≥ 16.0											•	
≥ 16.5										(•)		
≥ 18.0												•
槽深 Depth of groove	2.5	2.5	4.0	0.8	2.0	1.0	3.0	2.3	3.5	4.0 (6.5)	4.3	8.0
槽宽 Width of groove	0.5- 2.0	1.0- 2.0	1.0- 3.0	0.7- 1.5	1.0- 2.0	0.7- 2.0	1.0- 3.0	0.7- 3.0	1.0- 3.0	0.7- 3.0	0.7- 4.0	2.0- 3.0
加工 / Machining												
切槽 Grooving	•	•	•	•	•	•	•	•	•	•	•	•
镗孔 Boring	•	•	•	•	•	•		•		•	•	
螺纹切削 Threading	•	•			•	•		•		•	•	
倒角 Chamfering	•	•			•	•		•		•	•	
端面切槽 Face Grooving	•	•	•							•		
镗孔和仿形加工 Boring and Profiling	•											

D

B106

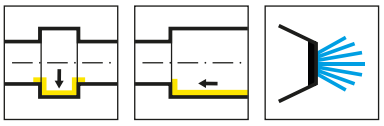

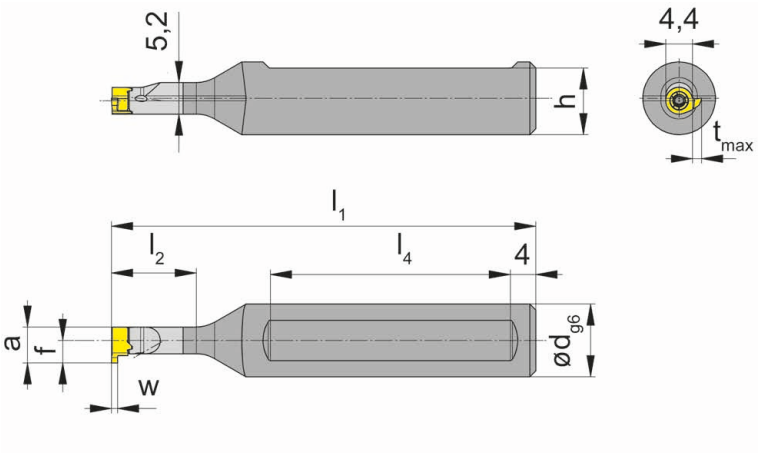

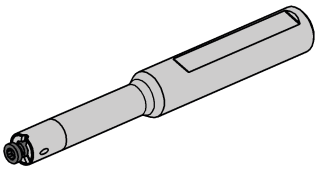

R=右手型-如图
R = right hand version shown

L=左手型
L = left hand version

产品型号 Part number	d	l_1	l_2	h	l_4	HWS
RB106.0012.01	12	70	14	11	40	304044R
RB106.0012.02	12	80	20	11	40	304044R
RB106.0012.03	12	90	26	11	45	304044R
LB106.0012.01	12	70	14	11	40	304044L
LB106.0012.02	12	80	20	11	40	304044L
LB106.0012.03	12	90	26	11	45	304044L

w,a,tmax和f见刀片
w, a, tmax and f see inserts

配件
Spare Parts

刀杆 Toolholder	锁紧螺钉 Clamping Screw	TORX PLUS®扳手 TORX PLUS® Wrench
R/LB106...	**1.8.4T6EP**	**T6PL**

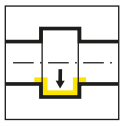

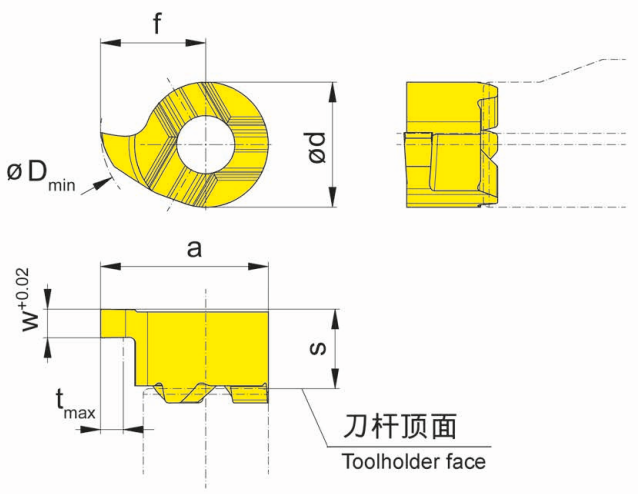

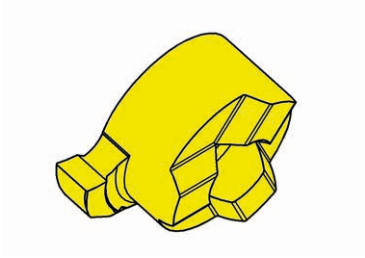

R=右手型-如图
R = right hand version shown

L=左手型
L = left hand version

▲ 库存
on stock

Δ 4周
4 weeks

产品型号 Part number	w	s	f	a	d	t_{max}	D_{min}	HIS		硬质合金牌号 Carbide grades EG55	TH35
R106.0070.2.00	0.74	2.8	3.7	5.9	4.4	0.8	6.5	304044R		▲	▲
R106.0100.2.00	1	2.8	3.7	5.9	4.4	0.8	6.5	304044R		Δ	▲
R106.0150.2.00	1.5	2.8	3.7	5.9	4.4	0.8	6.5	304044R		Δ	▲
L106.0070.2.00	0.74	2.8	3.7	5.9	4.4	0.8	6.5	304044L		Δ	
L106.0100.2.00	1	2.8	3.7	5.9	4.4	0.8	6.5	304044L		Δ	
L106.0150.2.00	1.5	2.8	3.7	5.9	4.4	0.8	6.5	304044L		Δ	Δ
									P	●	●
									M	o	●
									K	o	●
									N	-	●
									S	-	●
									H	-	-

D

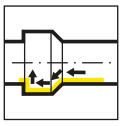

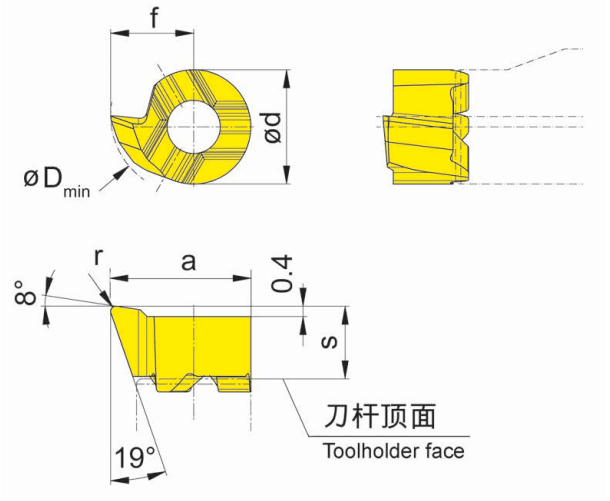

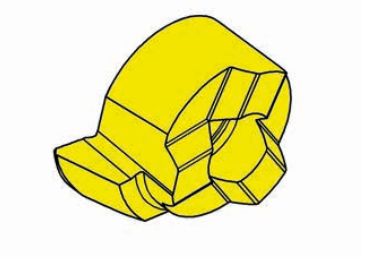

R=右手型-如图
R = right hand version shown

L=左手型
L = left hand version

▲ 库存
on stock

Δ 4周
4 weeks

硬质合金牌号
Carbide grades

产品型号 Part number	s	f	a	r	d	D_{min}	HIS		EG55	TH35
R106.1831.1.005	2.8	3.2	5.4	0.05	4.4	6	304044R		▲	▲
R106.1831.1.02	2.8	3.2	5.4	0.2	4.4	6	304044R		▲	▲
R106.1831.1.04	2.8	3.2	5.4	0.4	4.4	6	304044R		▲	▲
L106.1831.1.005	2.8	3.2	5.4	0.05	4.4	6	304044L		Δ	Δ
L106.1831.1.02	2.8	3.2	5.4	0.2	4.4	6	304044L		Δ	▲
L106.1831.1.04	2.8	3.2	5.4	0.4	4.4	6	304044L			▲
								P	●	●
								M	o	●
								K	o	●
								N	-	●
								S	-	●
								H	-	-

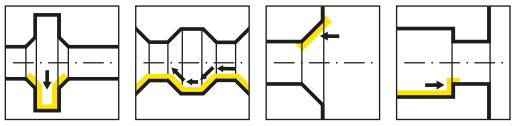

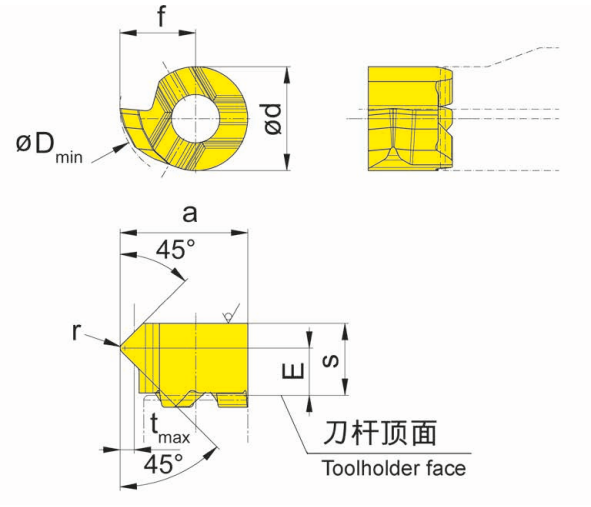

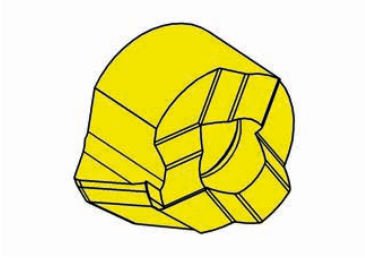

R=右手型-如图
R = right hand version shown

L=左手型
L = left hand version

▲ 库存
on stock

Δ 4周
4 weeks

硬质合金牌号
Carbide grades

产品型号 Part number	E	s	f	a	r	d	t_{max}	D_{min}	HIS		EG55	TH35
R106.4545.1.02	2	3.05	3.2	5.4	0.2	4.4	0.6	6	304044R		▲	▲
L106.4545.1.02	2	3.05	3.2	5.4	0.2	4.4	0.6	6	304044L		Δ	
										P	●	●
										M	o	●
										K	o	●
										N	-	●
										S	-	●
										H	-	-

D

107

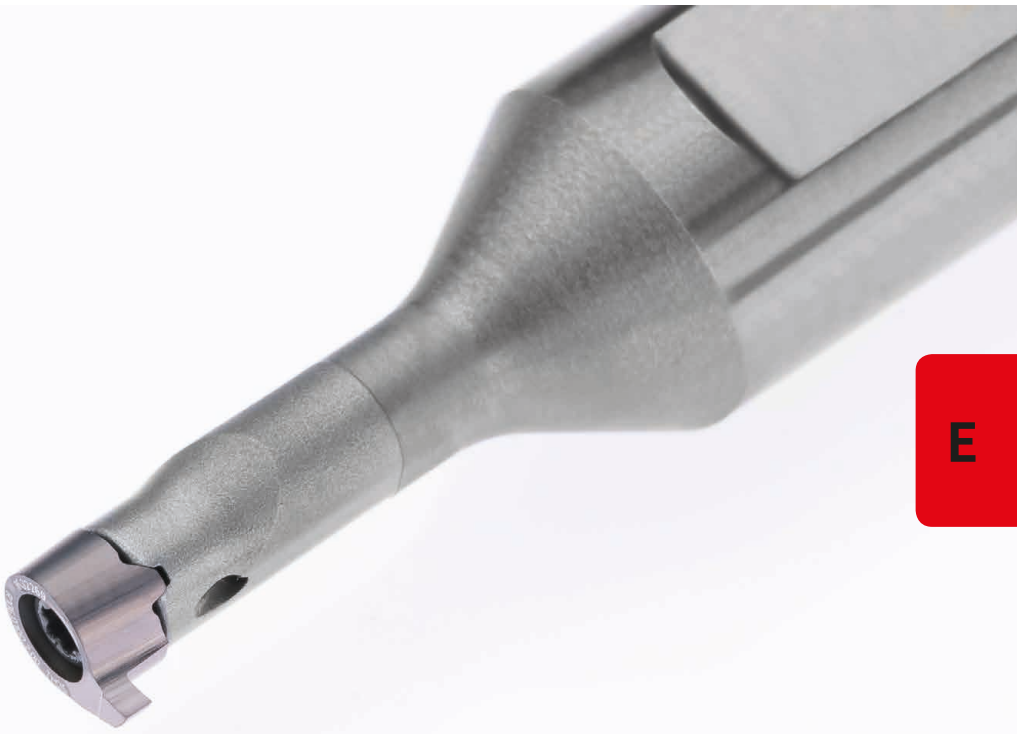

E

刀杆和刀片

Toolholder and Inserts

刀杆
Toolholder
B107

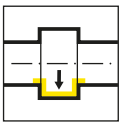

页/Page
200

刀片
Insert
107

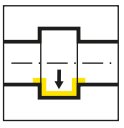

页/Page
201-202

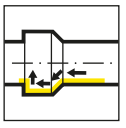

页/Page
203

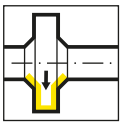

页/Page
204

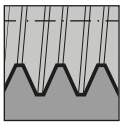

页/Page
205

E

孔径 Bore Ø	产品线 / Product line											
	105	109	110	106	107	108	10P	111	11P	114	116	18P
≥ 0.2	•											
≥ 0.5	•											
≥ 0.7	•											
≥ 1.0	•											
≥ 1.5	•											
≥ 2.0	•											
≥ 3.0	•											
≥ 4.0	•											
≥ 5.0	•											
≥ 6.0	•	•	•	•								
≥ 6.8		•	•	•								
≥ 7.0		•			•							
≥ 7.8			•		•	•						
≥ 8.0			•		•	•						
≥ 9.0			•		•	•	•					
≥ 10.0			•				•	•	•			
≥ 10.5									•			
≥ 11.0								•	•			
≥ 11.5									•			
≥ 13.8										•		
≥ 14.0										•	•	
≥ 16.0											•	
≥ 16.5										(•)		
≥ 18.0												•
槽深 Depth of groove	2.5	2.5	4.0	0.8	2.0	1.0	3.0	2.3	3.5	4.0 (6.5)	4.3	8.0
槽宽 Width of groove	0.5- 2.0	1.0- 2.0	1.0- 3.0	0.7- 1.5	1.0- 2.0	0.7- 2.0	1.0- 3.0	0.7- 3.0	1.0- 3.0	0.7- 3.0	0.7- 4.0	2.0- 3.0
加工 / Machining												
切槽 Grooving	•	•	•	•	•	•	•	•	•	•	•	•
镗孔 Boring	•	•	•	•	•	•		•		•	•	
螺纹切削 Threading	•	•			•	•		•		•	•	
倒角 Chamfering	•	•			•	•		•		•	•	
端面切槽 Face Grooving	•	•	•							•		
镗孔和仿形加工 Boring and Profiling	•											

E

B107

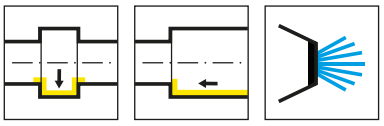

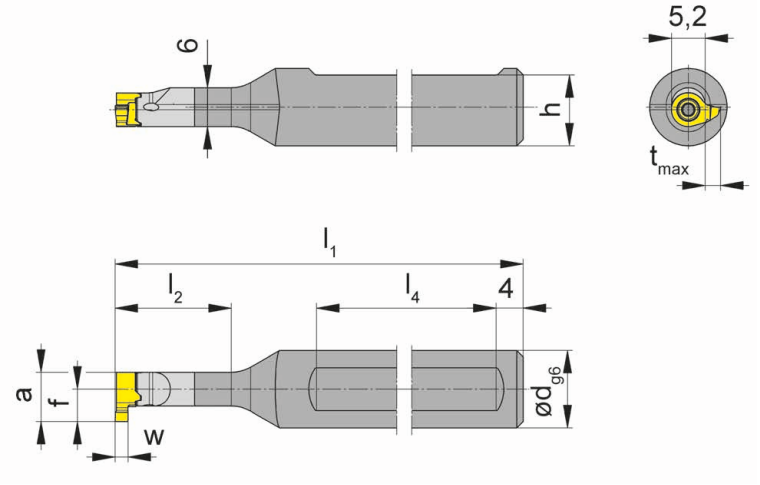

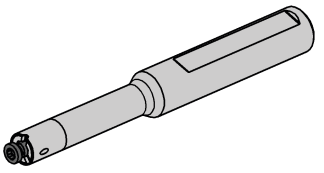

R=右手型-如图
R = right hand version shown

L=左手型
L = left hand version

产品型号 Part number	d	l_1	l_2	h	l_4	HWS
RB107.0012.01	12	80	18	11	45	107052R
RB107.0012.02	12	90	26	11	45	107052R
RB107.0012.03	12	100	36	11	45	107052R
LB107.0012.01	12	80	18	11	45	107052L
LB107.0012.02	12	90	26	11	45	107052L
LB107.0012.03	12	100	36	11	45	107052L

w,a,tmax和f见刀片
w, a, tmax and f see inserts

配件
Spare Parts

刀杆 Toolholder	锁紧螺钉 Clamping Screw	TORX PLUS®扳手 TORX PLUS® Wrench
R/LB107...	**2.2.5T7EP**	**T7PL**

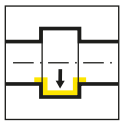

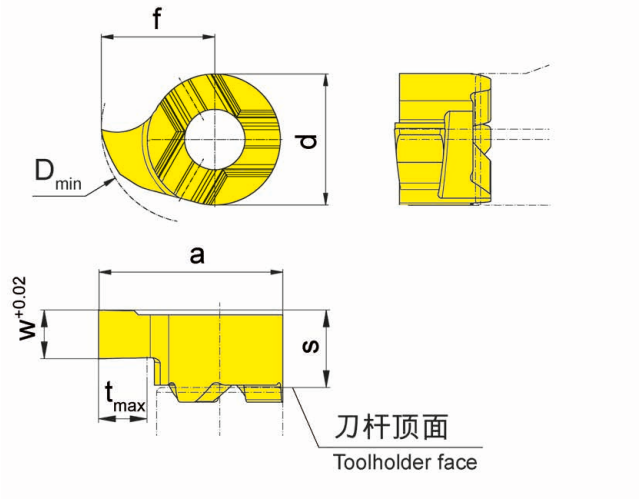

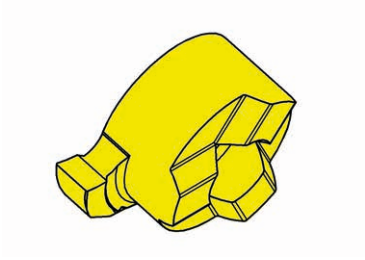

R=右手型-如图
R = right hand version shown

L=左手型
L = left hand version

▲ 库存
on stock

Δ 4周
4 weeks

硬质合金牌号
Carbide grades

产品型号 Part number	w	s	f	a	d	t_{max}	D_{min}	HIS		EG55	TH35
R107.0100.1.00	1	3.3	4	6.6	5.2	1	7	107052R		▲	▲
R107.0150.1.00	1.5	3.3	4	6.6	5.2	1	7	107052R		▲	▲
L107.0100.1.00	1	3.3	4	6.6	5.2	1	7	107052L		Δ	Δ
L107.0150.1.00	1.5	3.3	4	6.6	5.2	1	7	107052L		Δ	▲
									P	●	●
									M	o	●
									K	o	●
									N	-	●
									S	-	●
									H	-	-

E

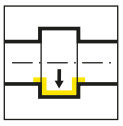

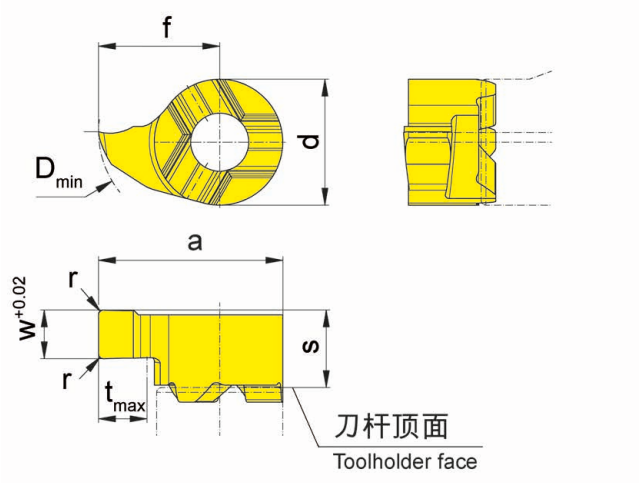

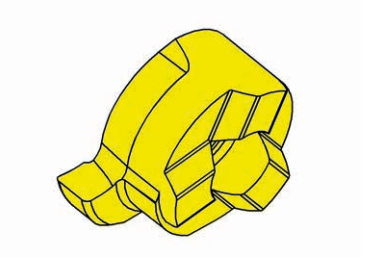

R=右手型-如图
R = right hand version shown

L=左手型
L = left hand version

硬质合金牌号
Carbide grades

▲ 库存
on stock

Δ 4周
4 weeks

产品型号 Part number	w	s	f	a	r	d	t_{max}	D_{min}	HIS		EG55	TH35
R107.0100.2.00	1	3.3	5	7.6	-	5.2	2	8	107052R		▲	▲
R107.0150.2.01	1.5	3.3	5	7.6	0.1	5.2	2	8	107052R		▲	▲
R107.0200.2.02	2	3.3	5	7.6	0.2	5.2	2	8	107052R		▲	▲
L107.0100.2.00	1	3.3	5	7.6	-	5.2	2	8	107052L		Δ	Δ
L107.0150.2.01	1.5	3.3	5	7.6	0.1	5.2	2	8	107052L		Δ	▲
L107.0200.2.02	2	3.3	5	7.6	0.2	5.2	2	8	107052L		Δ	▲
										P	●	●
										M	o	●
										K	o	●
										N	-	●
										S	-	●
										H	-	-

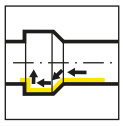

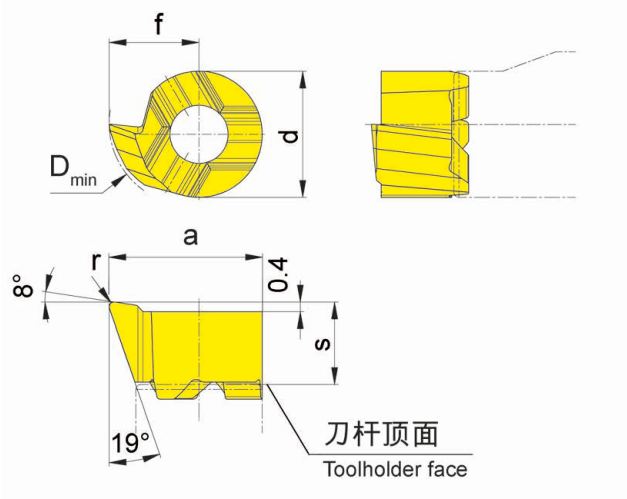

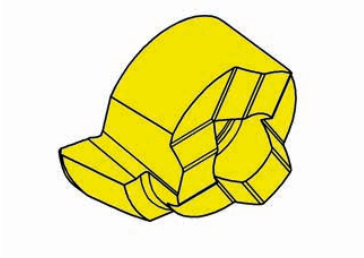

R=右手型-如图
R = right hand version shown

L=左手型
L = left hand version

▲ 库存
on stock

Δ 4周
4 weeks

硬质合金牌号
Carbide grades

产品型号 Part number	s	f	a	r	d	D_{min}	HIS		EG55	TH35
R107.1837.02	3.3	3.7	6.3	0.2	5.2	6.8	107052R		▲	▲
R107.1837.04	3.3	3.7	6.3	0.4	5.2	6.8	107052R		▲	▲
L107.1837.02	3.3	3.7	6.3	0.2	5.2	6.8	107052L		▲	▲
L107.1837.04	3.3	3.7	6.3	0.4	5.2	6.8	107052L		▲	▲
								P	●	●
								M	o	●
								K	o	●
								N	-	●
								S	-	●
								H	-	-

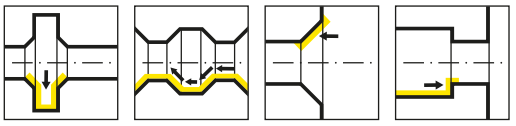

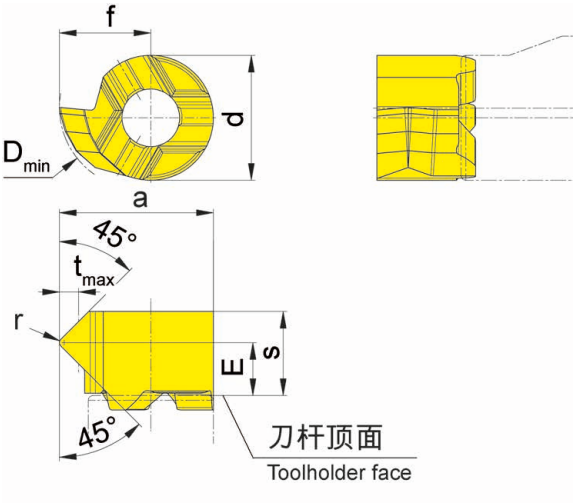

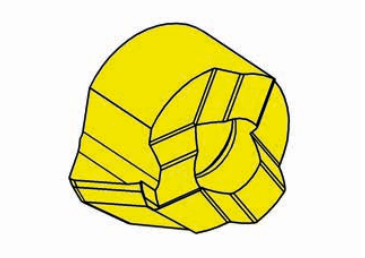

R=右手型-如图
R = right hand version shown

L=左手型
L = left hand version

▲ 库存
on stock

Δ 4周
4 weeks

硬质合金牌号
Carbide grades

产品型号 Part number	E	s	f	a	r	d	t_{max}	D_{min}	HIS		EG55	TH35
R107.4545.1.02	2.2	3.5	3.8	6.4	0.2	5.2	0.8	6.8	107052R		▲	▲
L107.4545.1.02	2.2	3.5	3.8	6.4	0.2	5.2	0.8	6.8	107052L		Δ	Δ
										P	●	●
										M	o	●
										K	o	●
										N	-	●
										S	-	●
										H	-	-

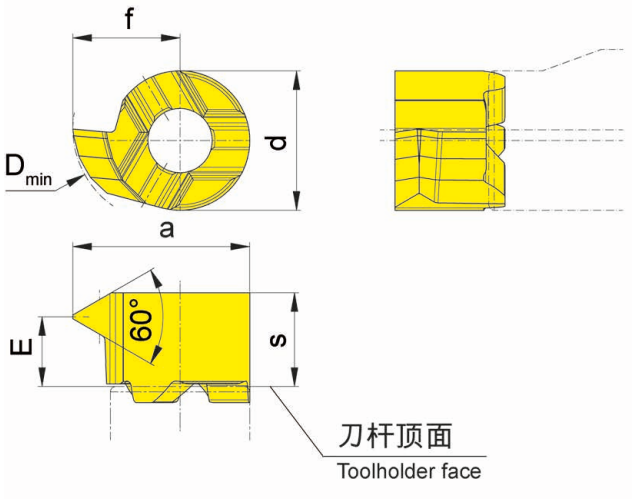

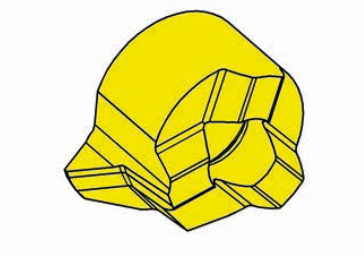

R=右手型-如图
R = right hand version shown

L=左手型
L = left hand version

▲ 库存
on stock

Δ 4周
4 weeks

硬质合金牌号
Carbide grades

产品型号 Part number	P	P_{max}	E	f	a	d	s	D_{min}	HIS		EG55	TH35
R107.0205.1.01	0.5	0.75	3	4	6.6	5.2	3.5	7	107052R		Δ	▲
R107.0510.1.01	1	1.25	2.8	4	6.6	5.2	3.5	7	107052R		▲	▲
R107.0815.1.01	1.5	1.75	2.6	4	6.6	5.2	3.5	7	107052R		▲	▲
L107.0205.1.01	0.5	0.75	3	4	6.6	5.2	3.5	7	107052L		Δ	Δ
L107.0510.1.01	1	1.25	2.8	4	6.6	5.2	3.5	7	107052L		Δ	▲
L107.0815.1.01	1.5	1.75	2.6	4	6.6	5.2	3.5	7	107052L		Δ	Δ
										P	●	●
										M	o	●
										K	o	●
										N	-	●
										S	-	●
										H	-	-

E

108

F

刀杆和刀片

Toolholder and Inserts

刀杆
Toolholder
B108

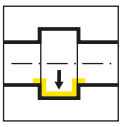

页/Page
210

刀片
Insert
108/S108

页/Page
211-212

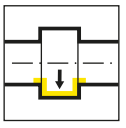

页/Page
213

页/Page
214

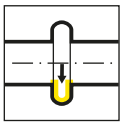

页/Page
215

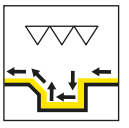

页/Page
216

页/Page
217

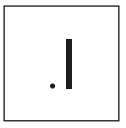

页/Page
218

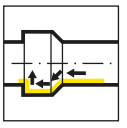

页/Page
219, 222

页/Page
220

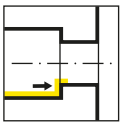

页/Page
221

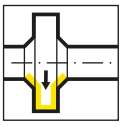

页/Page
223

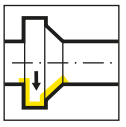

页/Page
224

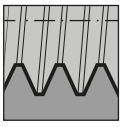

页/Page
225-229

F

孔径 Bore Ø	产品线 / Product line											
	105	109	110	106	107	108	10P	111	11P	114	116	18P
≥ 0.2	•											
≥ 0.5	•											
≥ 0.7	•											
≥ 1.0	•											
≥ 1.5	•											
≥ 2.0	•											
≥ 3.0	•											
≥ 4.0	•											
≥ 5.0	•											
≥ 6.0	•	•	•	•								
≥ 6.8		•	•	•								
≥ 7.0		•			•							
≥ 7.8			•		•	•						
≥ 8.0			•		•	•						
≥ 9.0			•		•	•	•					
≥ 10.0			•				•	•	•			
≥ 10.5									•			
≥ 11.0								•	•			
≥ 11.5									•			
≥ 13.8										•		
≥ 14.0										•	•	
≥ 16.0											•	
≥ 16.5										(•)		
≥ 18.0												•
槽深 Depth of groove	2.5	2.5	4.0	0.8	2.0	1.0	3.0	2.3	3.5	4.0 (6.5)	4.3	8.0
槽宽 Width of groove	0.5- 2.0	1.0- 2.0	1.0- 3.0	0.7- 1.5	1.0- 2.0	0.7- 2.0	1.0- 3.0	0.7- 3.0	1.0- 3.0	0.7- 3.0	0.7- 4.0	2.0- 3.0
加工 / Machining												
切槽 Grooving	•	•	•	•	•	•	•	•	•	•	•	•
镗孔 Boring	•	•	•	•	•	•		•		•	•	
螺纹切削 Threading	•	•			•	•		•		•	•	
倒角 Chamfering	•	•			•	•		•		•	•	
端面切槽 Face Grooving	•	•	•							•		
镗孔和仿形加工 Boring and Profiling	•											

F

B108

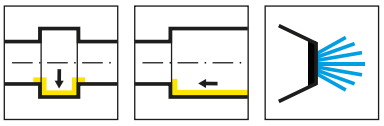

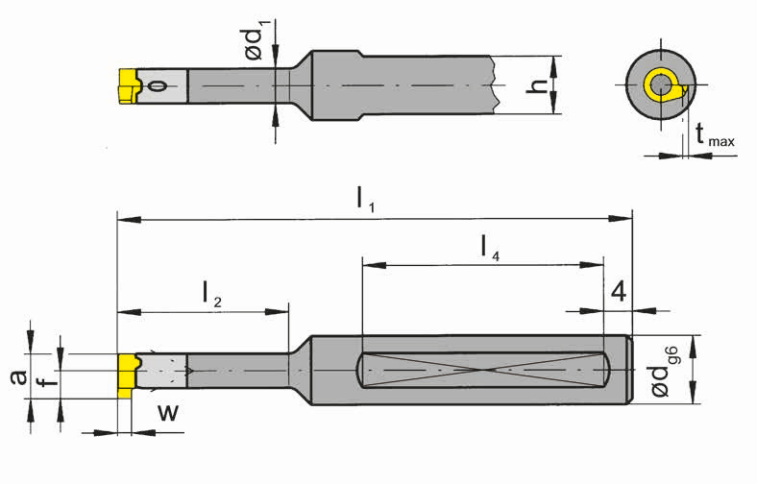

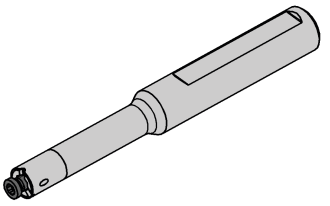

图示=右手型
Picture = right hand cutting version

产品型号 Part number	d	l_1	l_2	h	l_4	d_1	HWS
B108.0006.01A	6	65	-	-	-	-	306060R • 306060L
B108.0008.00	8	60	12.5	7	35	6	306060R • 306060L
B108.0008.01	8	70	21	7	40	6	306060R • 306060L
B108.0012.00	12	70	12.5	11	40	6	306060R • 306060L
B108.0012.01	12	80	21	11	45	6	306060R • 306060L
B108.0012.02	12	90	30	11	45	6	306060R • 306060L
B108.0012.03	12	100	42	11	45	6	306060R • 306060L

w,a,tmax和f见刀片
w, a, tmax and f see inserts

配件
Spare Parts

刀杆 Toolholder	锁紧螺钉 Clamping Screw	TORX PLUS®扳手 TORX PLUS® Wrench
B108...	**2.6.5T8EP**	**T8PL**

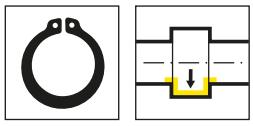

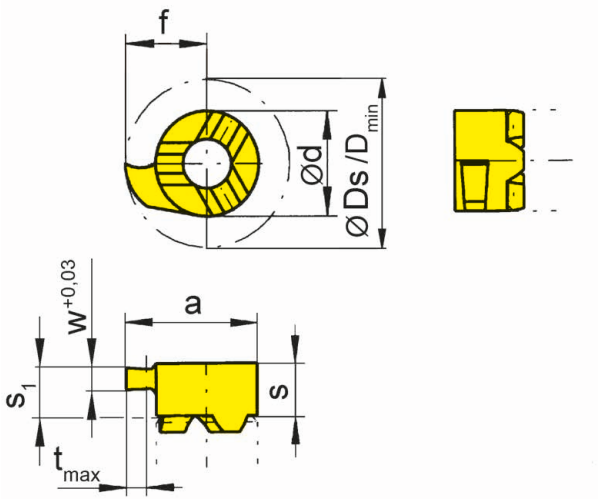

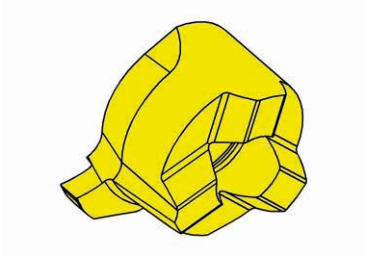

R=右手型-如图
R = right hand version shown

L=左手型
L = left hand version

▲ 库存
on stock

Δ 4周
4 weeks

硬质合金牌号
Carbide grades

产品型号 Part number	w	Nw	f	Ds	d	s	s_1	a	t_{max}	D_{min}	Z	HIS		EG55	TH35	TN35
R108.0070.00	0.74	0.7	4.8	9.6	6	3.6	3.2	7.8	1	8	1	306060R		▲	▲	▲
R108.0080.00	0.84	0.8	4.8	9.6	6	3.6	3.2	7.8	1	8	1	306060R		▲	▲	▲
R108.0090.00	0.94	0.9	4.8	9.6	6	3.6	3.2	7.8	1	8	1	306060R		▲	▲	▲
L108.0070.00	0.74	0.7	4.8	9.6	6	3.6	3.2	7.8	1	8	1	306060L		Δ	▲	▲
L108.0080.00	0.84	0.8	4.8	9.6	6	3.6	3.2	7.8	1	8	1	306060L		Δ	Δ	▲
L108.0090.00	0.94	0.9	4.8	9.6	6	3.6	3.2	7.8	1	8	1	306060L		Δ	▲	▲
													P	●	●	●
													M	o	●	●
													K	o	●	●
													N	-	●	●
													S	-	●	●
													H	-	-	-

切削深度受限
not face cutting, limited depth of cut

F

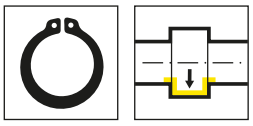

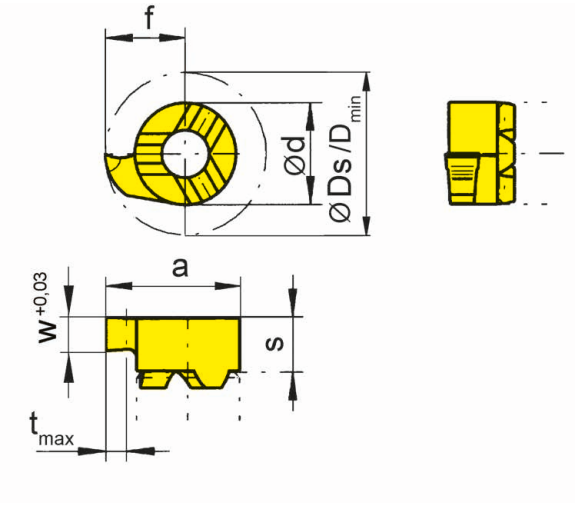

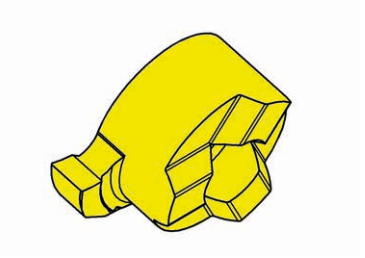

R=右手型-如图
R = right hand version shown

L=左手型
L = left hand version

▲ 库存
on stock

Δ 4周
4 weeks

硬质合金牌号
Carbide grades

产品型号 Part number	w	Nw	s	f	Ds	a	d	t_{max}	D_{min}	Z	HIS		MG12	EG55	TH35	TN35
R108.0110.00	1.19	1.1	3.2	4.8	9.6	7.8	6	1	8	1	306060R		▲	▲	▲	▲
R108.0160.00	1.69	1.6	3.2	4.8	9.6	7.8	6	1	8	1	306060R		▲	Δ	▲	▲
R108.0130.00	1.39	1.3	3.2	4.8	9.6	7.8	6	1	8	1	306060R		▲	▲	▲	▲
L108.0110.00	1.19	1.1	3.2	4.8	9.6	7.8	6	1	8	1	306060L		▲	Δ	▲	▲
L108.0160.00	1.69	1.6	3.2	4.8	9.6	7.8	6	1	8	1	306060L			▲	Δ	▲
L108.0130.00	1.39	1.3	3.2	4.8	9.6	7.8	6	1	8	1	306060L				Δ	▲
												P	o	●	●	●
												M	-	o	●	●
												K	-	o	●	●
												N	-	-	●	●
												S	-	-	●	●
												H	-	-	-	-

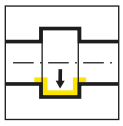

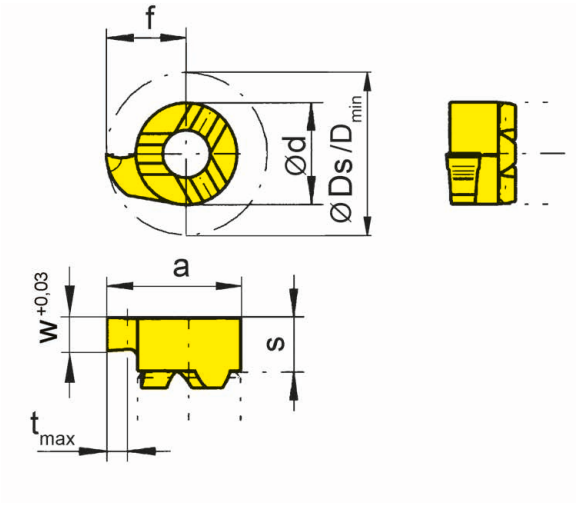

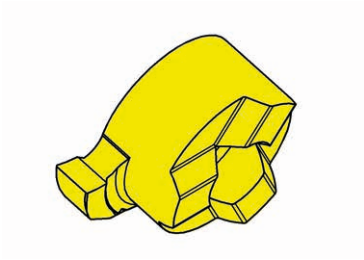

R=右手型-如图
R = right hand version shown

L=左手型
L = left hand version

硬质合金牌号
Carbide grades

▲ 库存
on stock

Δ 4周
4 weeks

产品型号 Part number	w	s	f	Ds	a	d	t_{max}	D_{min}	Z	HIS		MG12	EG55	TH35	TN35
R108.0150.00	1.5	3.2	4.8	9.6	7.8	6	1	8	1	306060R		▲	▲	▲	▲
R108.0200.00	2	3.2	4.8	9.6	7.8	6	1	8	1	306060R		▲	▲	▲	▲
L108.0150.00	1.5	3.2	4.8	9.6	7.8	6	1	8	1	306060L		▲		Δ	▲
L108.0200.00	2	3.2	4.8	9.6	7.8	6	1	8	1	306060L		▲		▲	▲
											P	o	●	●	●
											M	-	o	●	●
											K	-	o	●	●
											N	-	-	●	●
											S	-	-	●	●
											H	-	-	-	-

F

S108 Ø ≥ 8 mm

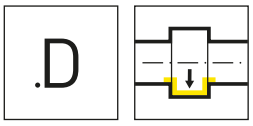

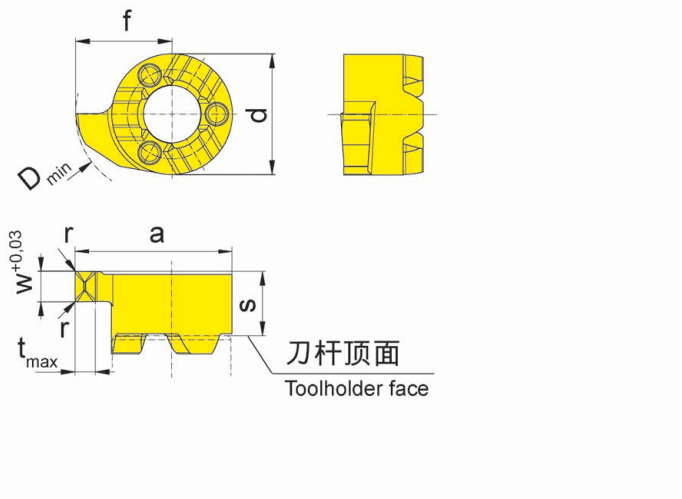

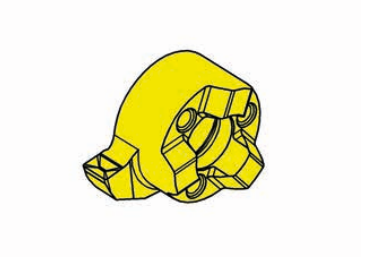

R=右手型-如图
R = right hand version shown

L=左手型
L = left hand version

▲ 库存
on stock

Δ 4周
4 weeks

硬质合金牌号
Carbide grades

产品型号 Part number	w	s	f	a	r	d	t_{max}	D_{min}	HIS		EG55	TH35
RS108.0100.D1	1	3.2	4.8	7.8	0.1	6	1	8	306060R		▲	▲
RS108.0150.D1	1.5	3.2	4.8	7.8	0.1	6	1	8	306060R		▲	▲
RS108.0200.D2	2	3.2	4.8	7.8	0.2	6	1	8	306060R		▲	▲
LS108.0100.D1	1	3.2	4.8	7.8	0.1	6	1	8	306060L		Δ	▲
LS108.0150.D1	1.5	3.2	4.8	7.8	0.1	6	1	8	306060L		Δ	Δ
LS108.0200.D2	2	3.2	4.8	7.8	0.2	6	1	8	306060L		Δ	▲
										P	●	●
										M	o	●
										K	o	●
										N	-	●
										S	-	●
										H	-	-

108

Ø ≥ 8 mm

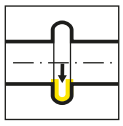

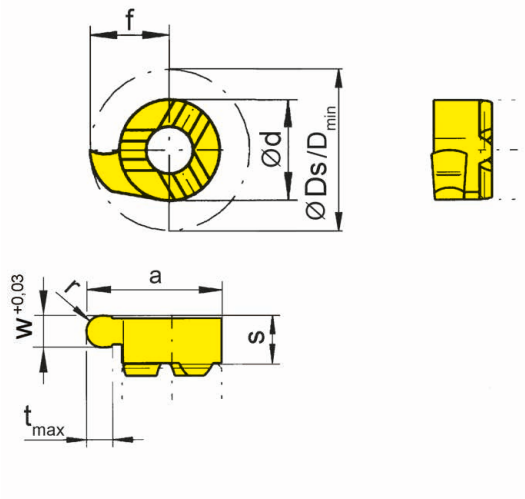

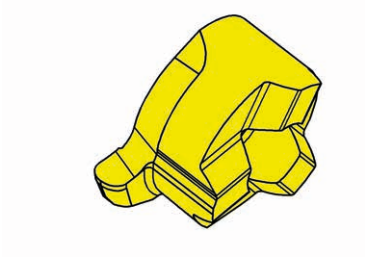

R=右手型-如图
R = right hand version shown

L=左手型
L = left hand version

硬质合金牌号
Carbide grades

▲ 库存
on stock

Δ 4周
4 weeks

产品型号 Part number	w	s	f	Ds	a	r	d	t_{max}	D_{min}	Z	HIS		MG12	EG55	TH35	TI25	TN35
R108.0004.08	0.8	3.2	4.8	9.6	7.8	0.4	6	1	8	1	306060R		▲	▲	▲		▲
R108.0006.12	1.2	3.2	4.8	9.6	7.8	0.6	6	1	8	1	306060R		▲	▲	▲		▲
R108.0009.18	1.8	3.2	4.8	9.6	7.8	0.9	6	1	8	1	306060R		▲	▲	▲	▲	▲
L108.0004.08	0.8	3.2	4.8	9.6	7.8	0.4	6	1	8	1	306060L		Δ	▲	▲		▲
L108.0006.12	1.2	3.2	4.8	9.6	7.8	0.6	6	1	8	1	306060L		▲	▲	▲		▲
L108.0009.18	1.8	3.2	4.8	9.6	7.8	0.9	6	1	8	1	306060L		Δ		▲	Δ	▲
												P	o	●	●	●	●
												M	-	o	●	●	●
												K	-	o	●	●	●
												N	-	-	●	●	●
												S	-	-	●	●	●
												H	-	-	-	-	-

F

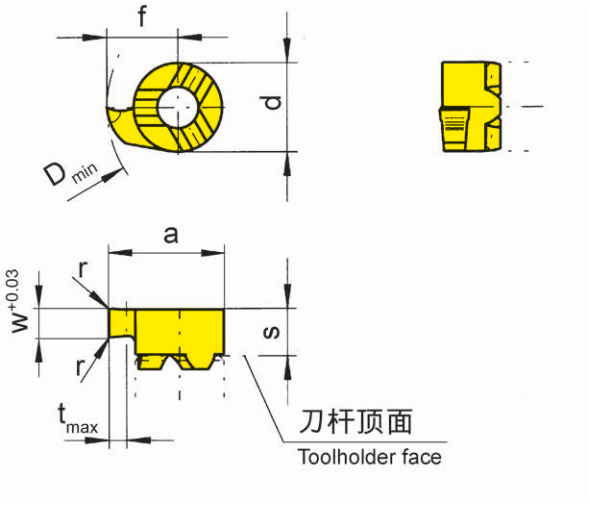

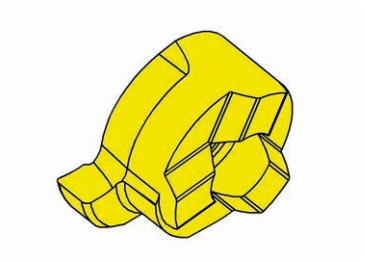

R=右手型-如图
R = right hand version shown

L=左手型
L = left hand version

硬质合金牌号
Carbide grades

▲ 库存
on stock

Δ 4周
4 weeks

产品型号 Part number	w	s	f	a	r	d	t_{max}	D_{min}	HIS		MG12	EG55	TH35	TI25	TN35
R108.0150.02	1.5	3.2	4.8	7.8	0.2	6	1	8	306060R		▲	▲	▲	▲	▲
L108.0150.02	1.5	3.2	4.8	7.8	0.2	6	1	8	306060L		▲	▲	▲	Δ	▲
										P	o	●	●	●	●
										M	-	o	●	●	●
										K	-	o	●	●	●
										N	-	-	●	●	●
										S	-	-	●	●	●
										H	-	-	-	-	-

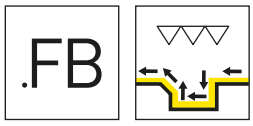

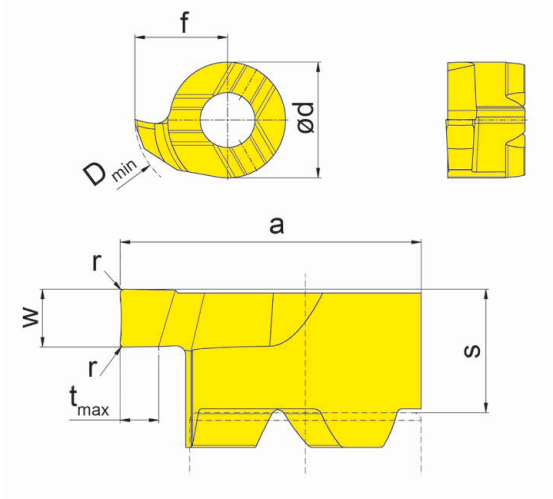

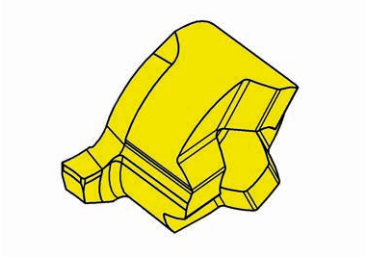

R=右手型-如图
R = right hand version shown

L=左手型
L = left hand version

硬质合金牌号
Carbide grades

▲ 库存
on stock

Δ 4周
4 weeks

产品型号 Part number	w	s	f	a	r	d	t_{max}	D_{min}	HIS		EG35
R108.FB10.01	1	3.2	4.8	7.8	0.1	6	1	8	306060R		▲
R108.FB15.01	1.5	3.2	4.8	7.8	0.1	6	1	8	306060R		▲
L108.FB10.01	1	3.2	4.8	7.8	0.1	6	1	8	306060L		▲
L108.FB15.01	1.5	3.2	4.8	7.8	0.1	6	1	8	306060L		▲
										P	●
										M	●
										K	o
										N	-
										S	-
										H	-

计算槽的最小可加工宽度 w_x
Calculation of the smallest possible width of groove w_x

例如 R108.FB10.01
Example

w_x = 2 x 槽宽 w - 2 x 刀尖圆角 R

w_x = 2 x Width of insert w - 2 x Corner radius insert R

w_x = 2 x 1 mm - 2 x 0.1 mm

w_x = 1.8 mm

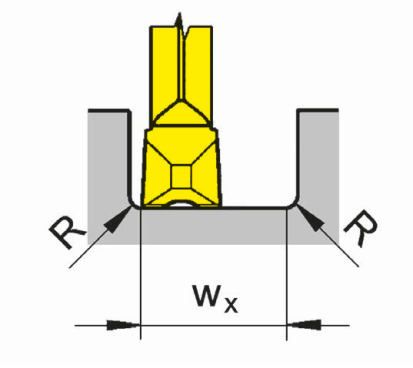

加工路径
Processing flow

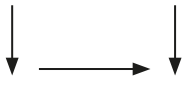

S108 Ø ≥ 7.8 mm

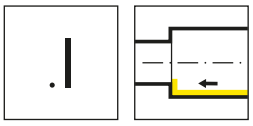

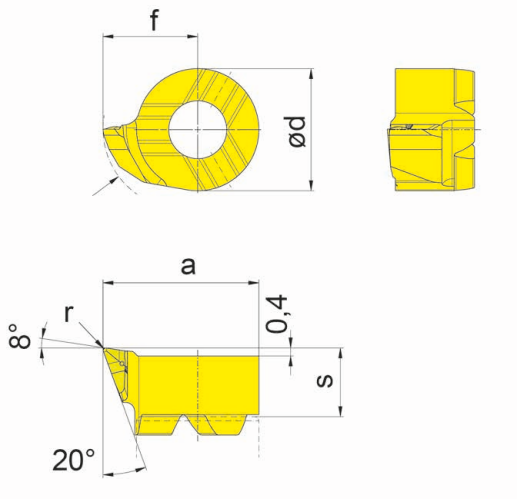

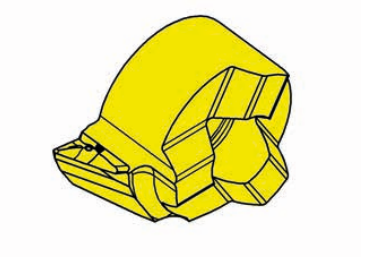

R=右手型-如图
R = right hand version shown

硬质合金牌号
Carbide grades

▲ 库存
on stock

Δ 4周
4 weeks

产品型号 Part number	s	f	a	r	d	D_{min}	HIS		EG35	EG55	IG35
RS108.0820.I05	3.37	4.65	7.65	0.05	6	7.8	306060R		Δ		Δ
RS108.0820.I10	3.38	4.65	7.65	0.1	6	7.8	306060R		▲		▲
RS108.0820.I20	3.4	4.65	7.65	0.2	6	7.8	306060R			▲	▲
								P	●	●	-
								M	●	o	●
								K	o	o	-
								N	-	-	-
								S	-	-	●
								H	-	-	-

F

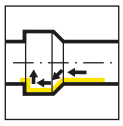

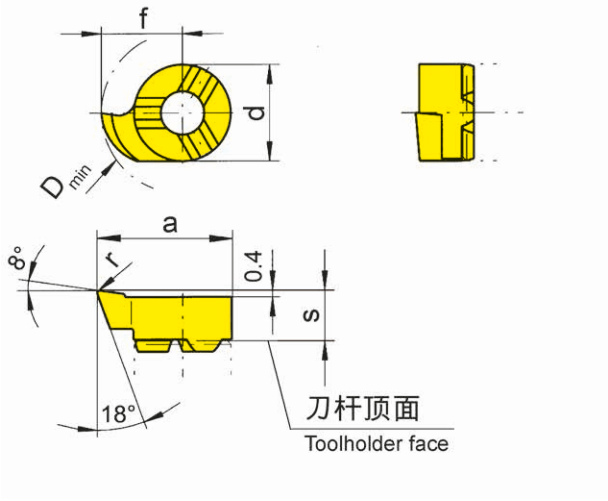

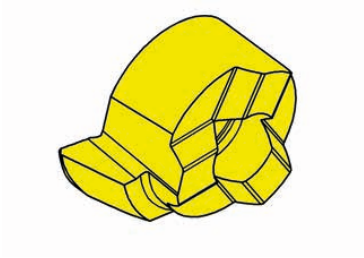

R=右手型-如图
R = right hand version shown

L=左手型
L = left hand version

硬质合金牌号
Carbide grades

▲ 库存
on stock

Δ 4周
4 weeks

产品型号 Part number	s	f	a	r	d	D_{min}	HIS	MG12	EG55	TF45	TH35	TI25	TN35
R108.1846.02	3.4	4.65	7.65	0.2	6	7.8	306060R	▲	▲	Δ	▲	▲	▲
L108.1846.02	3.4	4.65	7.65	0.2	6	7.8	306060L	▲	▲		▲	▲	▲
								P o	●	●	●	●	●
								M -	o	●	●	●	●
								K -	o	●	●	●	●
								N -	-	●	●	●	●
								S -	-	●	●	●	●
								H -	-	-	-	-	-

F

S108 Ø ≥ 7.8 mm

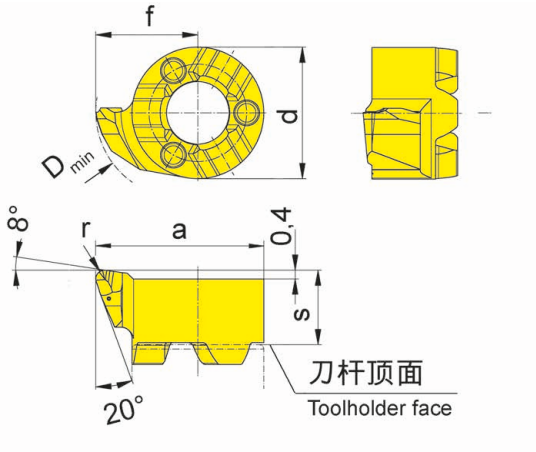

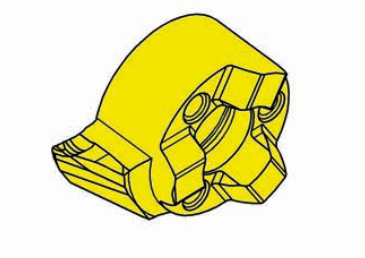

R=右手型-如图
R = right hand version shown

L=左手型
L = left hand version

▲ 库存
on stock

Δ 4周
4 weeks

产品型号 Part number	s	f	a	r	d	D_{min}	HIS	硬质合金牌号 Carbide grades EG55	TH35
RS108.1846.R2	3.4	4.65	7.65	0.2	6	7.8	306060R	▲	▲
RS108.1846.R4	3.4	4.65	7.65	0.4	6	7.8	306060R	▲	▲
LS108.1846.R2	3.4	4.65	7.65	0.2	6	7.8	306060L	▲	▲
LS108.1846.R4	3.4	4.65	7.65	0.4	6	7.8	306060L	▲	▲

	EG55	TH35
P	●	●
M	o	●
K	o	●
N	-	●
S	-	●
H	-	-

F

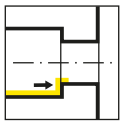

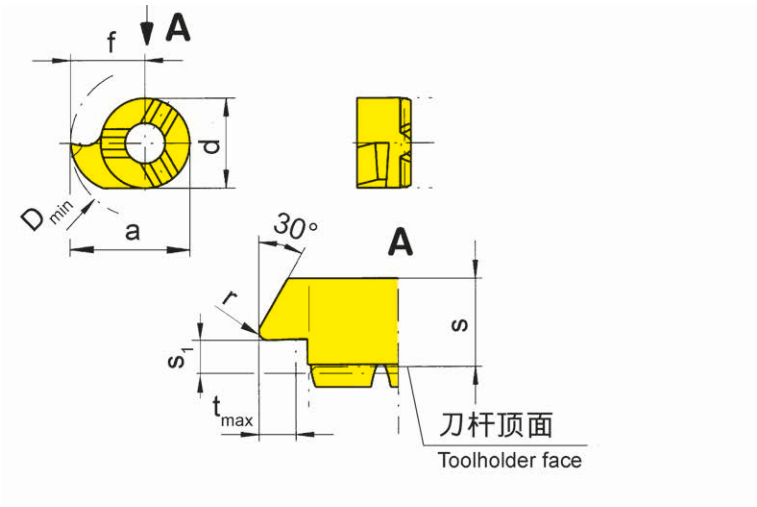

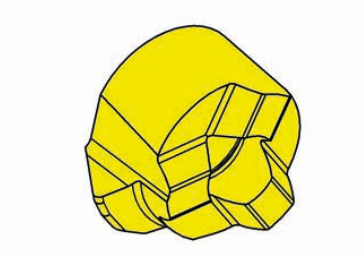

R=右手型-如图
R = right hand version shown

L=左手型
L = left hand version

▲ 库存
on stock

硬质合金牌号
Carbide grades

Δ 4周
4 weeks

产品型号 Part number	s	f	a	r	s_1	d	t_{max}	D_{min}	HIS		EG55	TH35	TN35
R108.3046.02	3.6	4.65	7.65	0.2	0.8	6	1.3	7.8	306060R		▲	▲	▲
L108.3046.02	3.6	4.65	7.65	0.2	0.8	6	1.3	7.8	306060L		Δ	Δ	▲
										P	●	●	●
										M	o	●	●
										K	o	●	●
										N	-	●	●
										S	-	●	●
										H	-	-	-

F

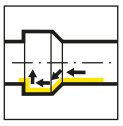

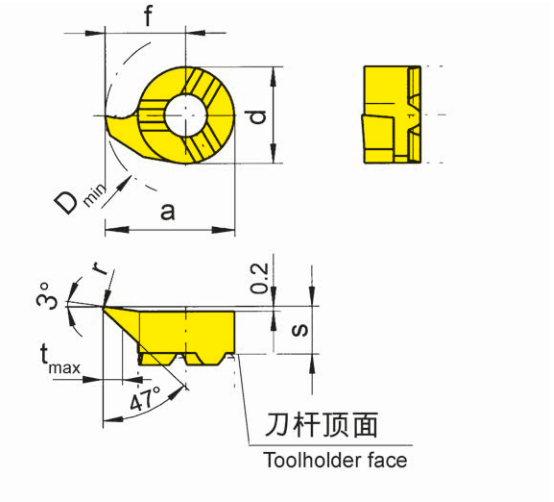

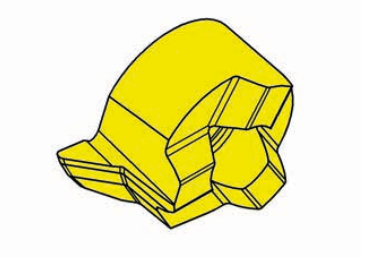

R=右手型-如图
R = right hand version shown

L=左手型
L = left hand version

▲ 库存
on stock

Δ 4周
4 weeks

硬质合金牌号
Carbide grades

产品型号 Part number	s	f	a	r	d	t_{max}	D_{min}	HIS		MG12	EG55	TH35	TN35
R108.4748.01	3.2	4.65	7.65	0.1	6	1.2	7.8	306060R			▲	▲	
R108.4748.02	3.2	4.65	7.65	0.2	6	1.2	7.8	306060R		Δ	▲	▲	▲
R108.4748.04	3.2	4.65	7.65	0.4	6	1.2	7.8	306060R			▲	▲	
L108.4748.01	3.2	4.65	7.65	0.1	6	1.2	7.8	306060L			▲	▲	
L108.4748.02	3.2	4.65	7.65	0.2	6	1.2	7.8	306060L			▲	▲	▲
L108.4748.04	3.2	4.65	7.65	0.4	6	1.2	7.8	306060L			▲	▲	
									P	o	●	●	●
									M	-	o	●	●
									K	-	o	●	●
									N	-	-	●	●
									S	-	-	●	●
									H	-	-	-	-

F

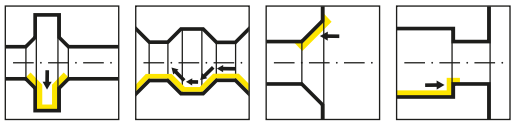

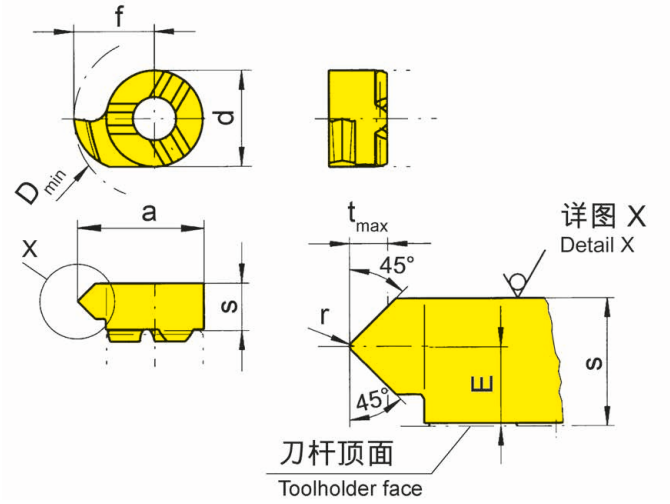

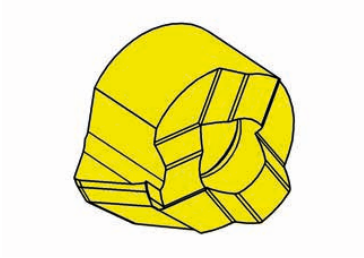

R=右手型-如图
R = right hand version shown

L=左手型
L = left hand version

▲ 库存
on stock

硬质合金牌号
Carbide grades

Δ 4周
4 weeks

产品型号 Part number	E	f	Ds	r	d	s	a	D_{min}	α	t_{max}	Z	HIS		EG55	TA45	TI25	TN35
R108.4545.02	1.8	4.65	9.3	0.2	6	3.6	7.65	7.8	45°	1.4	1	306060R		▲	▲	▲	▲
L108.4545.02	1.8	4.65	9.3	0.2	6	3.6	7.65	7.8	45°	1.4	1	306060L		▲	Δ	Δ	▲
													P	●	●	●	●
													M	o	●	●	●
													K	o	●	●	●
													N	-	●	●	●
													S	-	●	●	●
													H	-	-	-	-

F

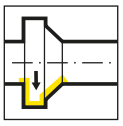

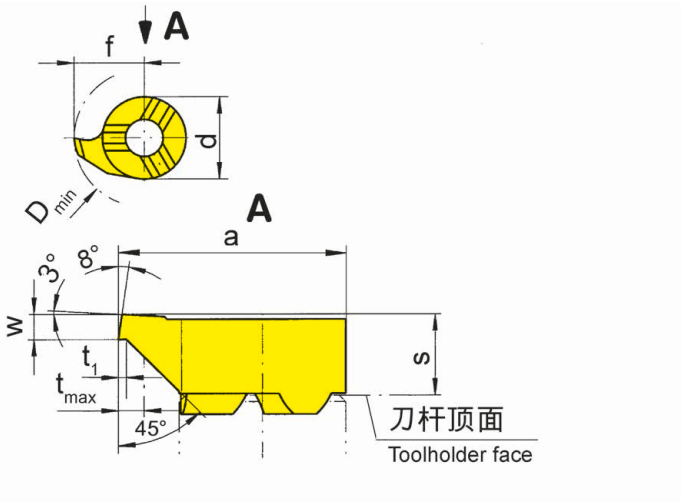

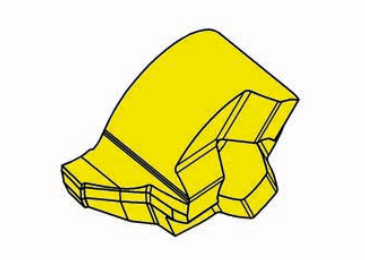

R=右手型-如图
R = right hand version shown

L=左手型
L = left hand version

硬质合金牌号
Carbide grades

▲ 库存
on stock

Δ 4周
4 weeks

产品型号 Part number	w	s	f	a	d	t_{max}	t_1	D_{min}	HIS		MG12	EG55	TI25	TN35
R108.0810.45	1	3.2	4.8	7.8	6	1.5	0.2	8	306060R		▲	▲	▲	▲
L108.0810.45	1	3.2	4.8	7.8	6	1.5	0.2	8	306060L		Δ	▲	▲	▲
										P	o	●	●	●
										M	-	o	●	●
										K	-	o	●	●
										N	-	-	●	●
										S	-	-	●	●
										H	-	-	-	-

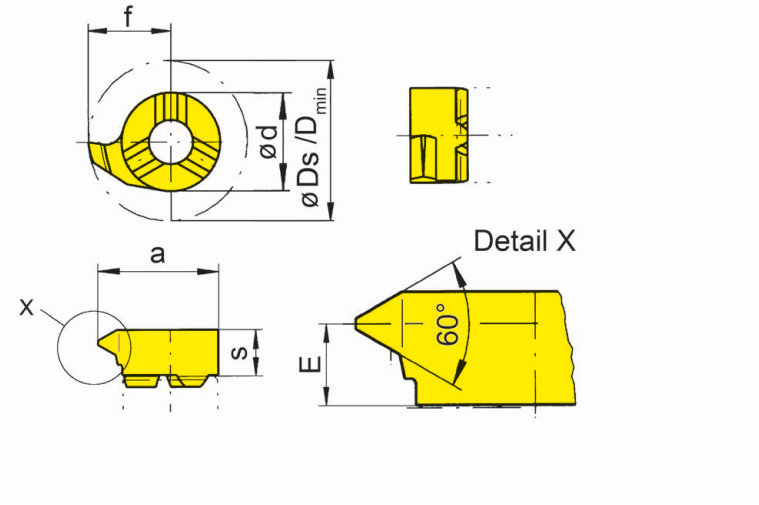

R=右手型-如图
R = right hand version shown

L=左手型
L = left hand version

▲ 库存
on stock

Δ 4周
4 weeks

硬质合金牌号
Carbide grades

产品型号 Part number	P	P_{max}	E	f	a	d	s	D_{min}	Ds	HIS		MG12	EG55	TH35	TI25	TN35
R108.0205.01	0.5	0.75	2.8	4.8	7.8	6	3.6	8	9.6	306060R		▲	▲	▲		▲
R108.0510.01	1	1.25	2.8	4.8	7.8	6	3.6	8	9.6	306060R		▲	▲	▲	▲	▲
R108.0815.01	1.5	1.75	2.6	4.8	7.8	6	3.6	8	9.6	306060R		▲	▲	▲		▲
L108.0205.01	0.5	0.75	2.8	4.8	7.8	6	3.6	8	9.6	306060L		Δ	▲	▲		▲
L108.0510.01	1	1.25	2.8	4.8	7.8	6	3.6	8	9.6	306060L		Δ	▲	▲	▲	▲
L108.0815.01	1.5	1.75	2.6	4.8	7.8	6	3.6	8	9.6	306060L		Δ	▲	▲		▲
											P	o	●	●	●	●
											M	-	o	●	●	●
											K	-	o	●	●	●
											N	-	-	●	●	●
											S	-	-	●	●	●
											H	-	-	-	-	-

F

S108 Ø ≥ 8 mm

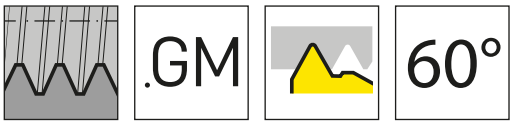

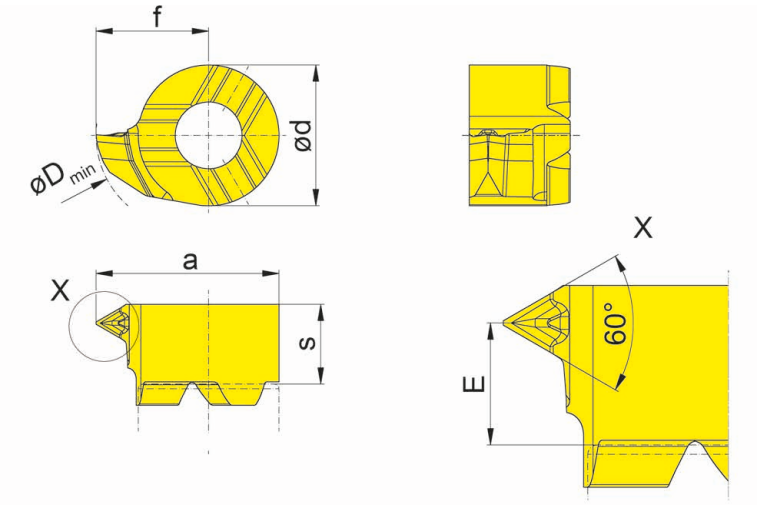

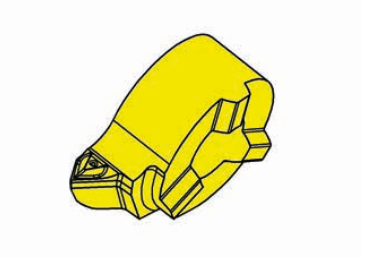

R=右手型-如图
R = right hand version shown

硬质合金牌号
Carbide grades

▲ 库存
on stock

Δ 4周
4 weeks

产品型号 Part number	P	P_{max}	E	f	a	d	s	D_{min}	HIS		EG55
RS108.0205.GM1	0.5	0.75	2.6	4.8	7.8	6	3.4	8	306060R		▲
RS108.0510.GM1	1	1.25	2.6	4.8	7.8	6	3.4	8	306060R		▲
RS108.0815.GM1	1.5	1.5	2.6	4.8	7.8	6	3.4	8	306060R		▲
LS108.0205.GM1	0.5	0.75	2.6	4.8	7.8	6	3.4	8	306060L		▲
LS108.0510.GM1	1	1.25	2.6	4.8	7.8	6	3.4	8	306060L		▲
LS108.0815.GM1	1.5	1.5	2.6	4.8	7.8	6	3.4	8	306060L		▲
										P	●
										M	o
										K	o
										N	-
										S	-
										H	-

F

S108 Ø ≥ 8 mm

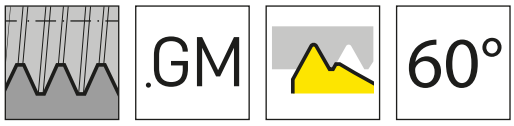

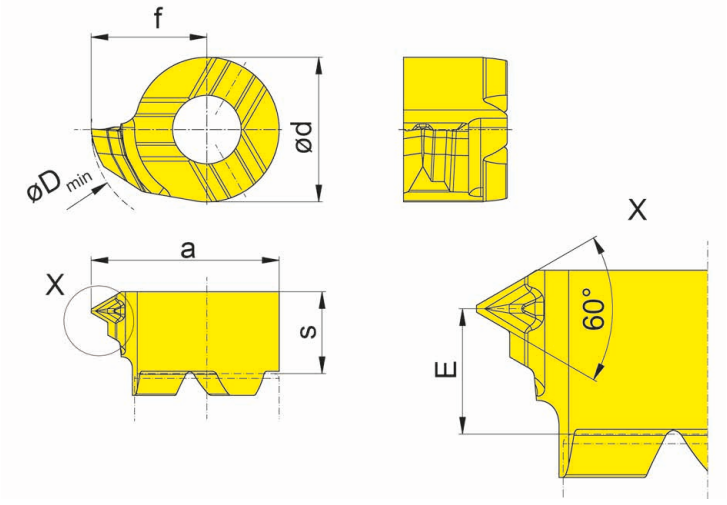

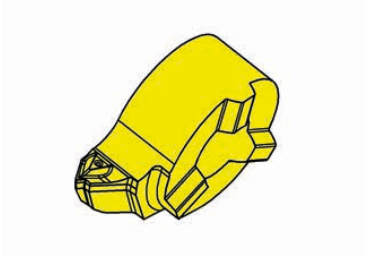

R=右手型-如图
R = right hand version shown

L=左手型
L = left hand version

硬质合金牌号
Carbide grades

▲ 库存
on stock

Δ 4周
4 weeks

产品型号 Part number	P	E	f	a	d	s	D_{min}	HIS		EG55
RS108.0305.GM2	0.5	2.6	4.8	7.8	6	3.4	8	306060R		▲
RS108.0510.GM2	1	2.6	4.8	7.8	6	3.4	8	306060R		▲
RS108.0512.GM2	1.25	2.6	4.8	7.8	6	3.4	8	306060R		▲
RS108.0815.GM2	1.5	2.6	4.8	7.8	6	3.4	8	306060R		▲
LS108.0305.GM2	0.5	2.6	4.8	7.8	6	3.4	8	306060L		▲
LS108.0510.GM2	1	2.6	4.8	7.8	6	3.4	8	306060L		▲
LS108.0512.GM2	1.25	2.6	4.8	7.8	6	3.4	8	306060L		▲
LS108.0815.GM2	1.5	2.6	4.8	7.8	6	3.4	8	306060L		▲
									P	●
									M	o
									K	o
									N	-
									S	-
									H	-

F

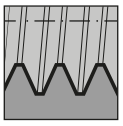

NPT
NPTF

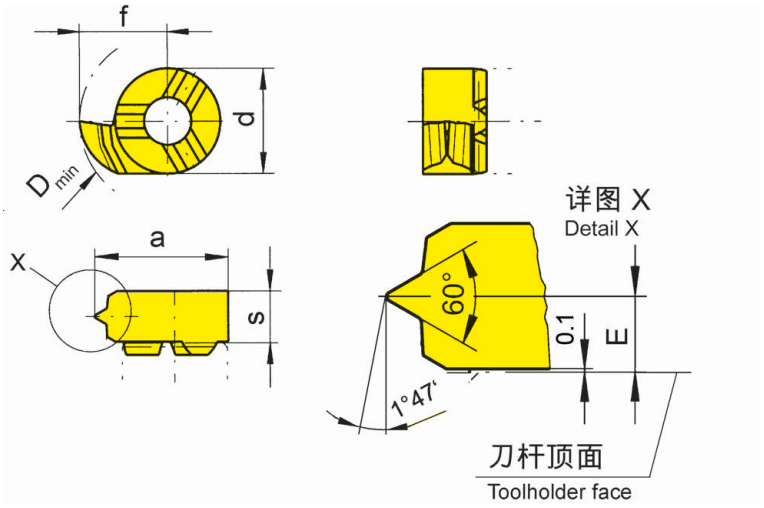

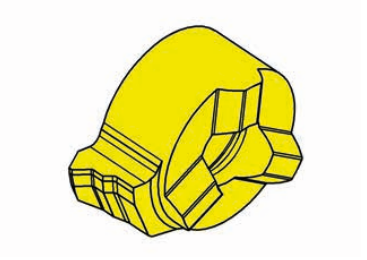

R=右手型-如图
R = right hand version shown

硬质合金牌号
Carbide grades

▲ 库存
on stock

Δ 4周
4 weeks

产品型号 Part number	TPI	E	f	d	s	D_{min}	HIS		EG55	TN35
R108.NP14.02	14	1.9	4.8	6	3.6	8	306060R		▲	▲
R108.NP18.02	18	1.9	4.8	6	3.6	8	306060R		▲	▲
R108.NP27.02	27	1.9	4.8	6	3.6	8	306060R		Δ	▲
								P	●	●
								M	o	●
								K	o	●
								N	-	●
								S	-	●
								H	-	-

F

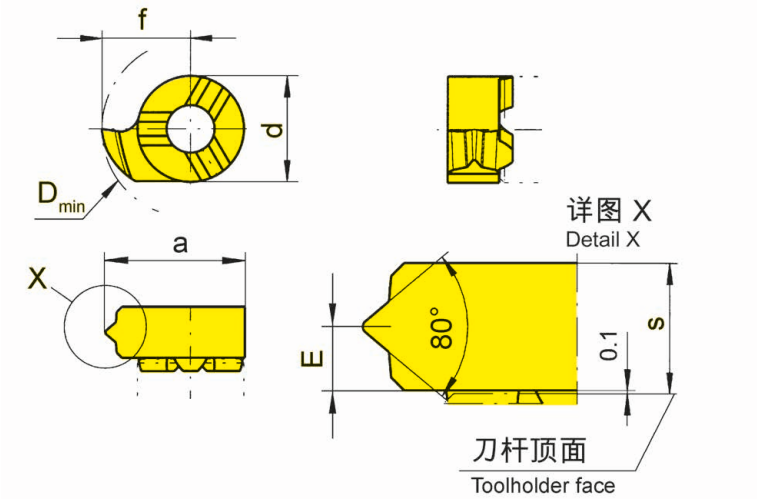

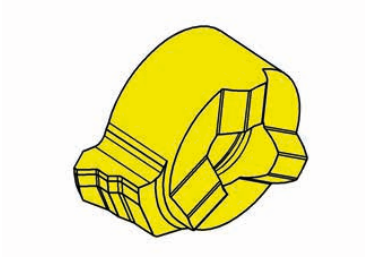

R=右手型-如图
R = right hand version shown

▲ 库存
on stock

Δ 4周
4 weeks

硬质合金牌号
Carbide grades

产品型号 Part number	TPI	E	f	d	s	D_{min}	HIS		EG55	TN35
R108.PG18.02	18	1.9	4.8	6	3.6	8	306060R		▲	▲
R108.PG20.02	20	1.9	4.8	6	3.6	8	306060R		▲	▲
								P	●	●
								M	o	●
								K	o	●
								N	-	●
								S	-	●
								H	-	-

F

10P

G

刀杆和刀片

Toolholder and Inserts

刀杆
Toolholder
B10P

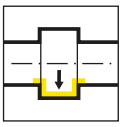

页/Page
234-235

刀片
Insert
10P/S10P

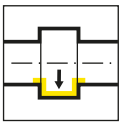

页/Page
236, 238

页/Page
237, 239

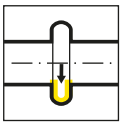

页/Page
240

页/Page
241

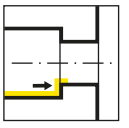

页/Page
242

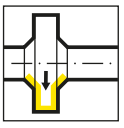

页/Page
243

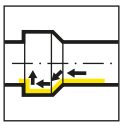

页/Page
244

G

孔径 Bore Ø	产品线 / Product line											
	105	109	110	106	107	108	10P	111	11P	114	116	18P
≥ 0.2	•											
≥ 0.5	•											
≥ 0.7	•											
≥ 1.0	•											
≥ 1.5	•											
≥ 2.0	•											
≥ 3.0	•											
≥ 4.0	•											
≥ 5.0	•											
≥ 6.0	•	•	•	•								
≥ 6.8		•	•	•								
≥ 7.0		•			•							
≥ 7.8			•		•	•						
≥ 8.0			•		•	•						
≥ 9.0			•		•	•	•					
≥ 10.0			•				•	•	•			
≥ 10.5									•			
≥ 11.0								•	•			
≥ 11.5									•			
≥ 13.8										•		
≥ 14.0										•	•	
≥ 16.0											•	
≥ 16.5										(•)		
≥ 18.0												•
槽深 Depth of groove	2.5	2.5	4.0	0.8	2.0	1.0	3.0	2.3	3.5	4.0 (6.5)	4.3	8.0
槽宽 Width of groove	0.5- 2.0	1.0- 2.0	1.0- 3.0	0.7- 1.5	1.0- 2.0	0.7- 2.0	1.0- 3.0	0.7- 3.0	1.0- 3.0	0.7- 3.0	0.7- 4.0	2.0- 3.0
加工 / Machining												
切槽 Grooving	•	•	•	•	•	•	•	•	•	•	•	•
镗孔 Boring	•	•	•	•	•	•		•		•	•	
螺纹切削 Threading	•	•			•	•		•		•	•	
倒角 Chamfering	•	•			•	•		•		•	•	
端面切槽 Face Grooving	•	•	•							•		
镗孔和仿形加工 Boring and Profiling	•											

G

B10P

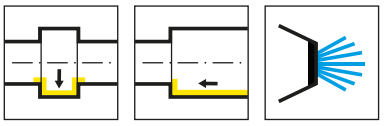

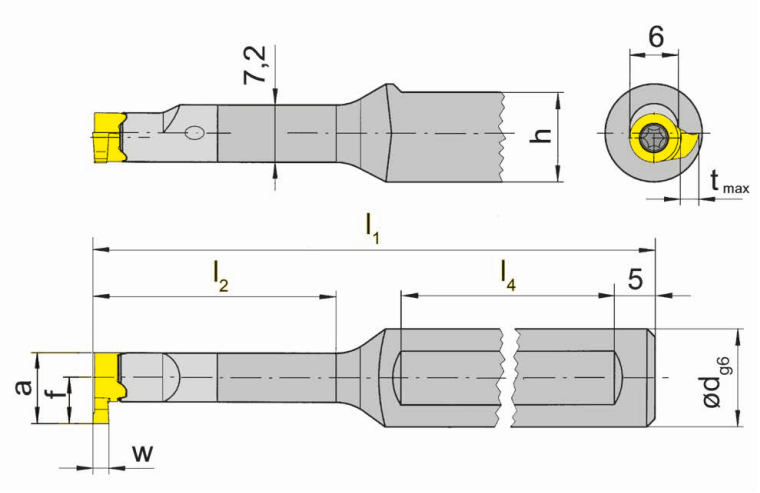

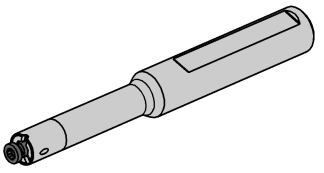

R=右手型-如图
R = right hand version shown

L=左手型
L = left hand version

产品型号 Part number	d	l_1	l_2	h	l_4	HWS
RB10P.0012.00	12	70	12.5	11	40	10P060R
RB10P.0012.01	12	80	21	11	45	10P060R
RB10P.0012.02	12	90	30	11	45	10P060R
RB10P.0012.03	12	100	42	11	45	10P060R
LB10P.0012.00	12	70	12.5	11	40	10P060L
LB10P.0012.01	12	80	21	11	45	10P060L
LB10P.0012.02	12	90	30	11	45	10P060L
LB10P.0012.03	12	100	42	11	45	10P060L

w,a,tmax和f见刀片
w, a, tmax and f see inserts

G

配件
Spare Parts

刀杆 Toolholder	锁紧螺钉 Clamping Screw	TORX PLUS®扳手 TORX PLUS® Wrench
R/LB10P...	**2.6.5T8EP**	**T8PL**

B10P

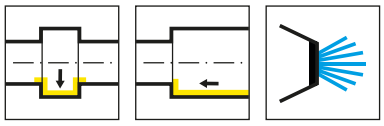

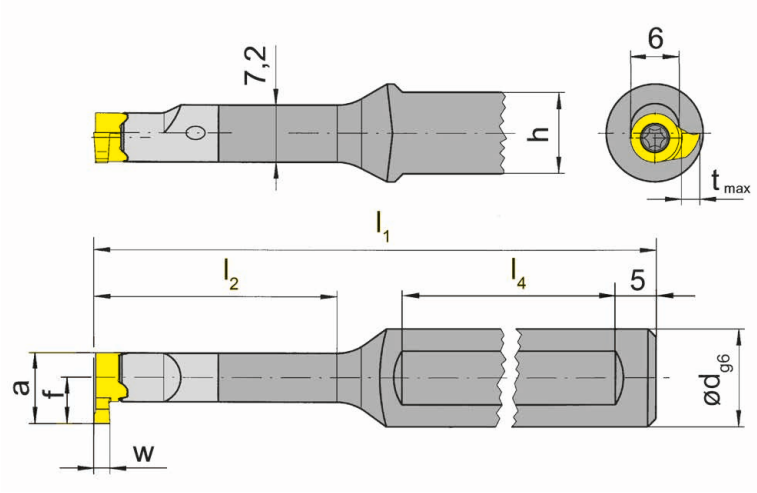

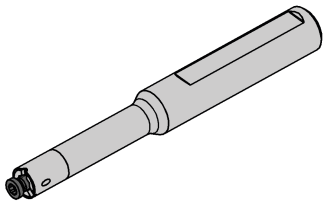

R=右手型-如图
R = right hand version shown

L=左手型
L = left hand version

产品型号 Part number	d	l_1	l_2	h	l_4	HWS
RB10P.0012.2.00	12	70	12.5	11	40	10P060R
RB10P.0012.2.01	12	80	21	11	45	10P060R
RB10P.0012.2.02	12	90	30	11	45	10P060R
RB10P.0012.2.03	12	100	42	11	45	10P060R
LB10P.0012.2.00	12	70	12.5	11	40	10P060L
LB10P.0012.2.01	12	80	21	11	45	10P060L
LB10P.0012.2.02	12	90	30	11	45	10P060L
LB10P.0012.2.03	12	100	42	11	45	10P060L

w,a,tmax和f见刀片
w, a, tmax and f see inserts

配件
Spare Parts

刀杆 Toolholder	锁紧螺钉 Clamping Screw	TORX PLUS®扳手 TORX PLUS® Wrench
R/LB10P...	**2.6.5T8EP**	**T8PL**

10P

Ø ≥ 9 mm

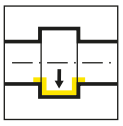

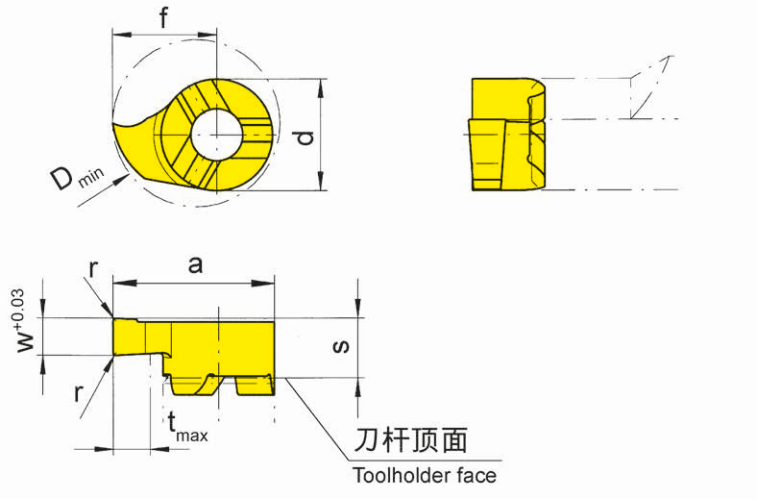

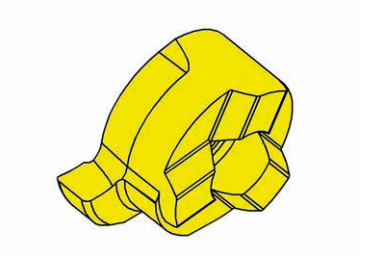

R=右手型-如图
R = right hand version shown

L=左手型
L = left hand version

▲ 库存
on stock

Δ 4周
4 weeks

硬质合金牌号
Carbide grades

产品型号 Part number	w	s	f	a	r	d	t_{max}	D_{min}	HIS		EG55	TH35
R10P.0100.1.00	1	3.6	5.5	8.5	-	6	2	9	10P060R		▲	▲
R10P.0150.1.00	1.5	3.6	5.5	8.5	-	6	2	9	10P060R		▲	▲
R10P.0200.1.02	2	3.6	5.5	8.5	0.2	6	2	9	10P060R		▲	▲
R10P.0250.1.02	2.5	3.6	5.5	8.5	0.2	6	2	9	10P060R		▲	▲
R10P.0300.1.02	3	3.6	5.5	8.5	0.2	6	2	9	10P060R		▲	▲
L10P.0100.1.00	1	3.6	5.5	8.5	-	6	2	9	10P060L		▲	▲
L10P.0150.1.00	1.5	3.6	5.5	8.5	-	6	2	9	10P060L		Δ	▲
L10P.0200.1.02	2	3.6	5.5	8.5	0.2	6	2	9	10P060L		▲	▲
L10P.0250.1.02	2.5	3.6	5.5	8.5	0.2	6	2	9	10P060L		Δ	▲
L10P.0300.1.02	3	3.6	5.5	8.5	0.2	6	2	9	10P060L		Δ	▲
										P	●	●
										M	o	●
										K	o	●
										N	-	●
										S	-	●
										H	-	-

G

S10P Ø ≥ 9 mm

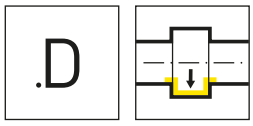

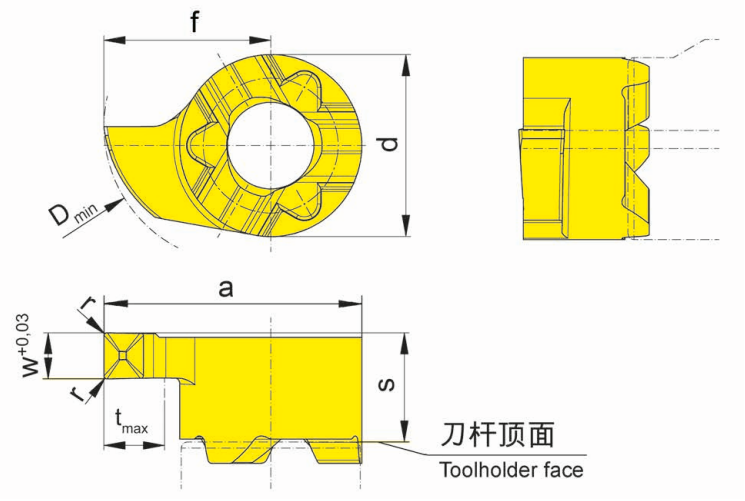

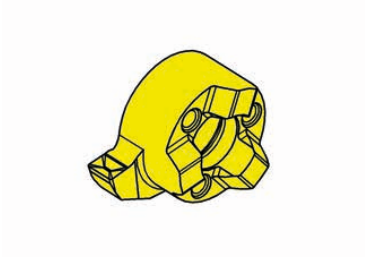

R=右手型-如图
R = right hand version shown

L=左手型
L = left hand version

▲ 库存
on stock

Δ 4周
4 weeks

硬质合金牌号
Carbide grades

产品型号 Part number	w	s	f	a	r	d	t_{max}	D_{min}	HIS		EG55	TH35
RS10P.0100.1.D1	1	3.6	5.5	8.5	0.1	6	2	9	10P060R		▲	▲
RS10P.0150.1.D1	1.5	3.6	5.5	8.5	0.1	6	2	9	10P060R		▲	▲
RS10P.0200.1.D2	2	3.6	5.5	8.5	0.2	6	2	9	10P060R		▲	▲
LS10P.0100.1.D1	1	3.6	5.5	8.5	0.1	6	2	9	10P060L		Δ	▲
LS10P.0150.1.D1	1.5	3.6	5.5	8.5	0.1	6	2	9	10P060L		Δ	▲
LS10P.0200.1.D2	2	3.6	5.5	8.5	0.2	6	2	9	10P060L		Δ	Δ
										P	●	●
										M	o	●
										K	o	●
										N	-	●
										S	-	●
										H	-	-

G

10P

Ø ≥ 10 mm

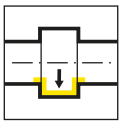

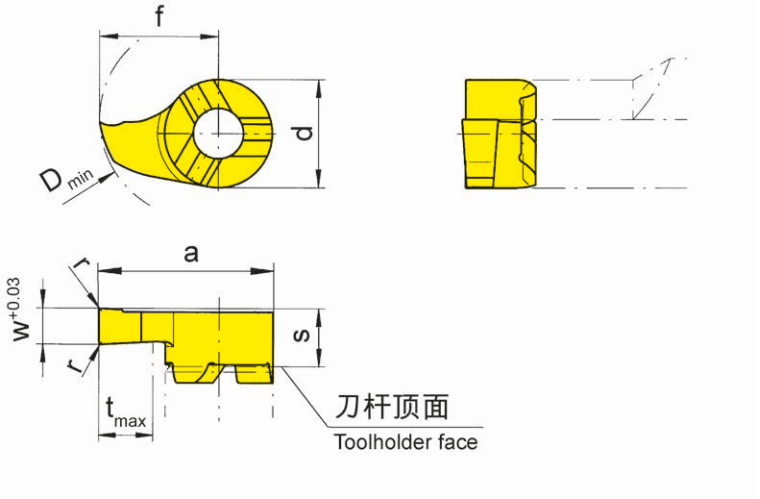

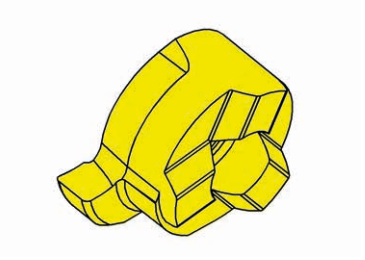

R=右手型-如图
R = right hand version shown

L=左手型
L = left hand version

▲ 库存
on stock

Δ 4周
4 weeks

硬质合金牌号
Carbide grades

产品型号 Part number	w	s	f	a	r	d	t_{max}	D_{min}	HIS		EG55	TH35
R10P.0100.2.00	1	3.6	6.5	9.5	-	6	3	10	10P060R		▲	▲
R10P.0150.2.00	1.5	3.6	6.5	9.5	-	6	3	10	10P060R		▲	▲
R10P.0200.2.02	2	3.6	6.5	9.5	0.2	6	3	10	10P060R		▲	▲
L10P.0100.2.00	1	3.6	6.5	9.5	-	6	3	10	10P060L		Δ	▲
L10P.0150.2.00	1.5	3.6	6.5	9.5	-	6	3	10	10P060L			▲
L10P.0200.2.02	2	3.6	6.5	9.5	0.2	6	3	10	10P060L		▲	▲
										P	●	●
										M	o	●
										K	o	●
										N	-	●
										S	-	●
										H	-	-

G

S10P Ø ≥ 10 mm

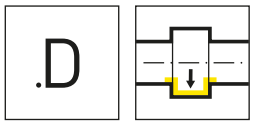

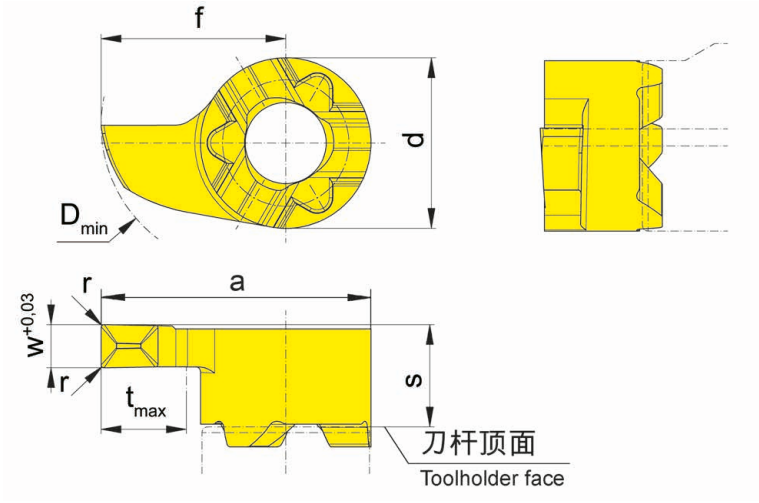

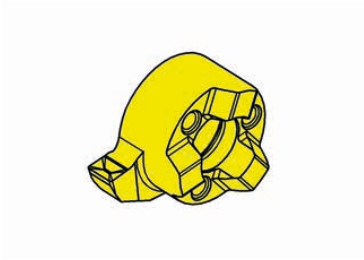

R=右手型-如图
R = right hand version shown

L=左手型
L = left hand version

▲ 库存
on stock

Δ 4周
4 weeks

产品型号 Part number	w	s	f	a	r	d	t_{max}	D_{min}	HIS		EG55	TH35
RS10P.0150.2.D1	1.5	3.6	6.5	9.5	0.1	6	3	10	10P060R		▲	▲
RS10P.0200.2.D2	2	3.6	6.5	9.5	0.2	6	3	10	10P060R		▲	▲
LS10P.0150.2.D1	1.5	3.6	6.5	9.5	0.1	6	3	10	10P060L		Δ	▲
LS10P.0200.2.D2	2	3.6	6.5	9.5	0.2	6	3	10	10P060L		▲	▲
										P	●	●
										M	o	●
										K	o	●
										N	-	●
										S	-	●
										H	-	-

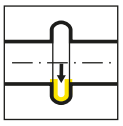

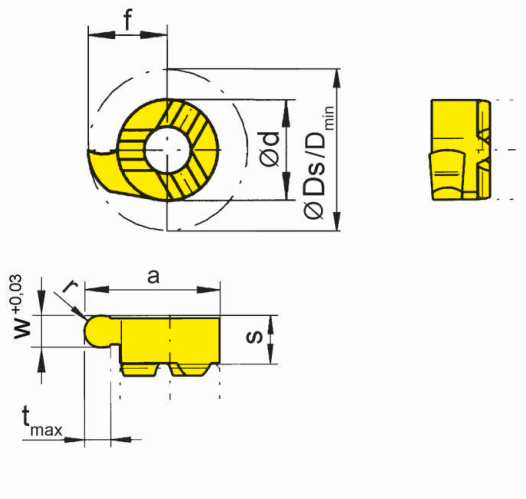

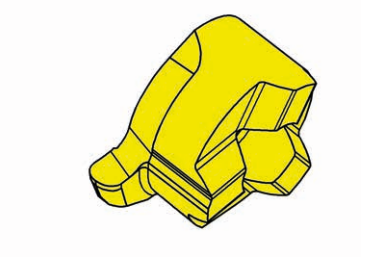

R=右手型-如图
R = right hand version shown

L=左手型
L = left hand version

硬质合金牌号
Carbide grades

▲ 库存
on stock

Δ 4周
4 weeks

产品型号 Part number	w	s	f	a	d	t_{max}	D_{min}	HIS		EG55
R10P.0005.2.10	1	3.6	6.5	9.5	6	3	10	10P060R		▲
R10P.0007.2.15	1.5	3.6	6.5	9.5	6	3	10	10P060R		▲
R10P.0009.2.18	1.8	3.6	6.5	9.5	6	3	10	10P060R		▲
L10P.0005.2.10	1	3.6	6.5	9.5	6	3	10	10P060L		▲
L10P.0007.2.15	1.5	3.6	6.5	9.5	6	3	10	10P060L		▲
L10P.0009.2.18	1.8	3.6	6.5	9.5	6	3	10	10P060L		▲
									P	●
									M	o
									K	o
									N	-
									S	-
									H	-

G

S10P Ø ≥ 8.8 mm

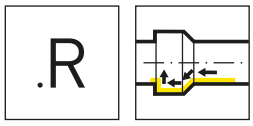

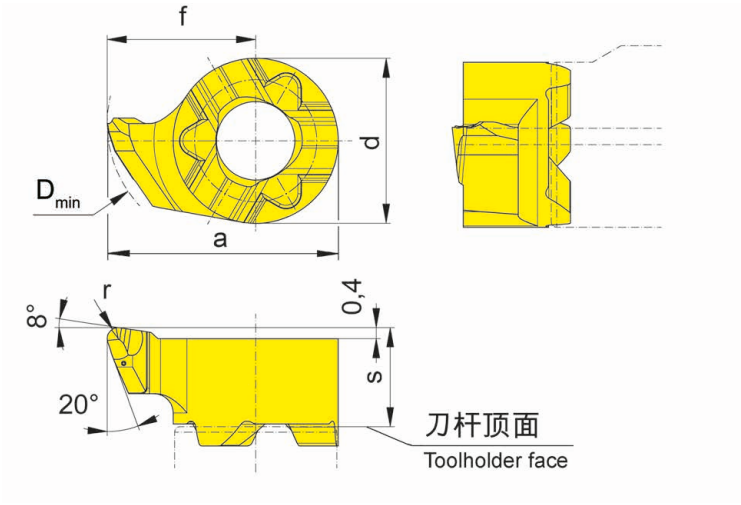

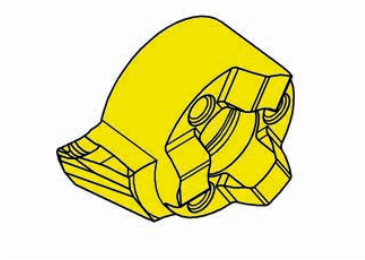

R=右手型-如图
R = right hand version shown

L=左手型
L = left hand version

▲ 库存
on stock

Δ 4周
4 weeks

硬质合金牌号
Carbide grades

产品型号 Part number	s	f	a	r	d	D_{min}	HIS		EG55	TH35
RS10P.1854.R2	3.6	5.4	8.4	0.2	6	8.8	10P060R		▲	▲
RS10P.1854.R4	3.6	5.4	8.4	0.4	6	8.8	10P060R		▲	▲
LS10P.1854.R2	3.6	5.4	8.4	0.2	6	8.8	10P060L		▲	▲
LS10P.1854.R4	3.6	5.4	8.4	0.4	6	8.8	10P060L		Δ	▲
								P	●	●
								M	o	●
								K	o	●
								N	-	●
								S	-	●
								H	-	-

G

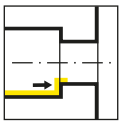

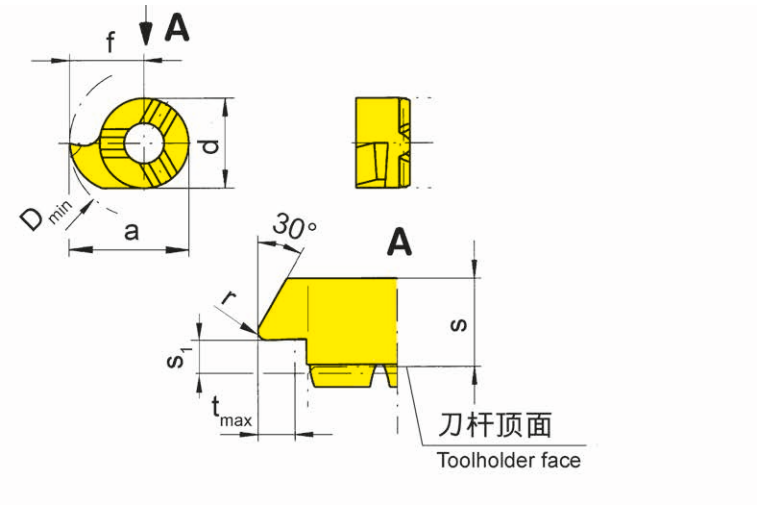

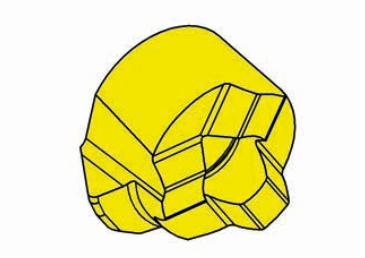

R=右手型-如图
R = right hand version shown

L=左手型
L = left hand version

硬质合金牌号
Carbide grades

▲ 库存
on stock

Δ 4周
4 weeks

产品型号 Part number	s	f	a	r	s_1	d	t_{max}	D_{min}	HIS		EG55
R10P.3065.2.02	3.75	6.5	9.5	0.2	1	6	3	10	10P060R		▲
L10P.3065.2.02	3.75	6.5	9.5	0.2	1	6	3	10	10P060L		▲
										P	●
										M	o
										K	o
										N	-
										S	-
										H	-

G

10P

Ø ≥ 9 mm

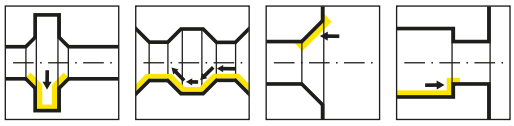

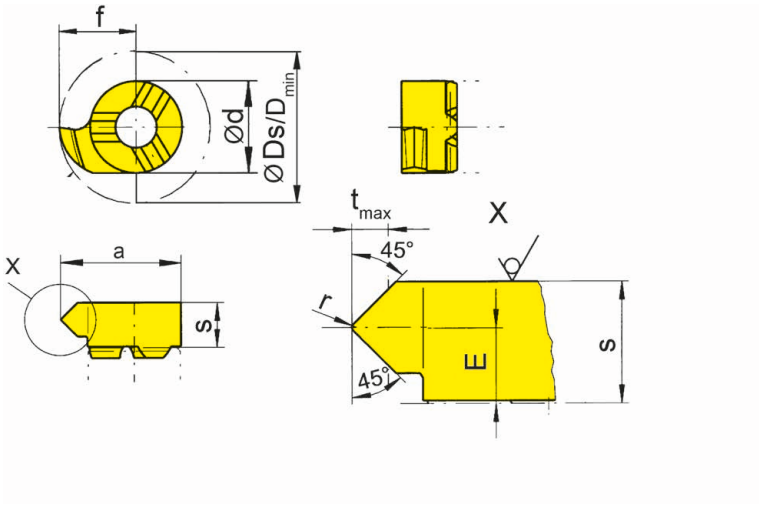

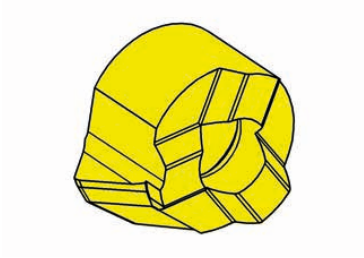

R=右手型-如图
R = right hand version shown

L=左手型
L = left hand version

▲ 库存
on stock

硬质合金牌号
Carbide grades

Δ 4周
4 weeks

产品型号 Part number	E	f	r	d	s	a	D_{min}	α	t_{max}	HIS		EG55
R10P.4545.1.02	1.9	5.5	0.2	6	3.75	8.5	9	45°	1.5	10P060R		▲
L10P.4545.1.02	1.9	5.5	0.2	6	3.75	8.5	9	45°	1.5	10P060L		▲
											P	●
											M	o
											K	o
											N	-
											S	-
											H	-

G

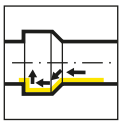

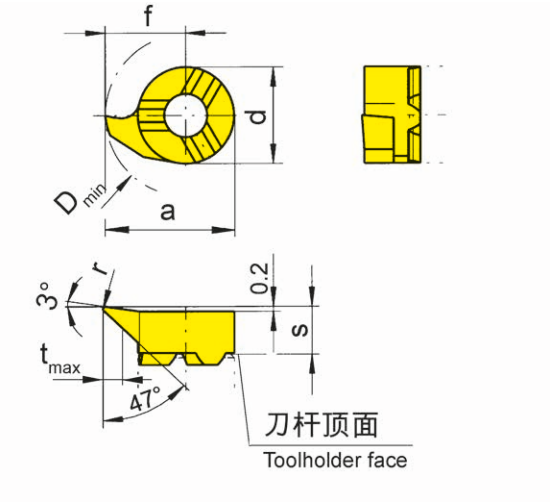

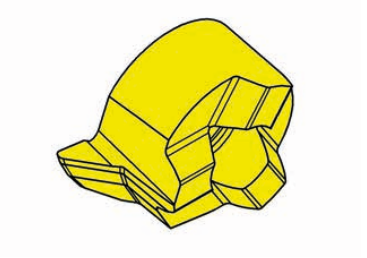

R=右手型-如图
R = right hand version shown

L=左手型
L = left hand version

▲ 库存
on stock

Δ 4周
4 weeks

硬质合金牌号
Carbide grades

产品型号 Part number	s	f	a	r	d	t_{max}	D_{min}	HIS		EG55
R10P.4765.2.02	3.6	6.5	9.5	0.2	6	3	10	10P060R		▲
L10P.4765.2.02	3.6	6.5	9.5	0.2	6	3	10	10P060L		▲
									P	●
									M	o
									K	o
									N	-
									S	-
									H	-

G

111

H

刀杆和刀片

Toolholder and Inserts

刀杆
Toolholder
B111

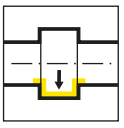

页/Page
248-249

刀夹
Cartridge
125

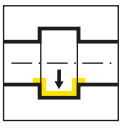

页/Page
250

刀片
Insert
111/S111

页/Page
251-252

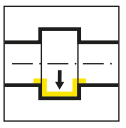

页/Page
253

页/Page
254

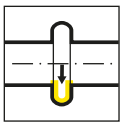

页/Page
255

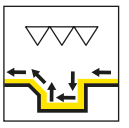

页/Page
256

页/Page
257

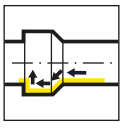

页/Page
258, 261

页/Page
259

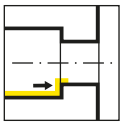

页/Page
260

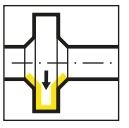

页/Page
262

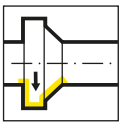

页/Page
263

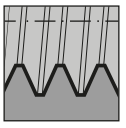

页/Page
264-269

H

孔径 Bore Ø	产品线 / Product line											
	105	109	110	106	107	108	10P	111	11P	114	116	18P
≥ 0.2	•											
≥ 0.5	•											
≥ 0.7	•											
≥ 1.0	•											
≥ 1.5	•											
≥ 2.0	•											
≥ 3.0	•											
≥ 4.0	•											
≥ 5.0	•											
≥ 6.0	•	•	•	•								
≥ 6.8		•	•	•								
≥ 7.0		•			•							
≥ 7.8			•		•	•						
≥ 8.0			•		•	•						
≥ 9.0			•		•	•						
≥ 10.0			•				•	•	•			
≥ 10.5									•			
≥ 11.0								•	•			
≥ 11.5									•			
≥ 13.8										•		
≥ 14.0										•	•	
≥ 16.0											•	
≥ 16.5										(•)		
≥ 18.0												•
槽深 Depth of groove	2.5	2.5	4.0	0.8	2.0	1.0	3.0	2.3	3.5	4.0 (6.5)	4.3	8.0
槽宽 Width of groove	0.5- 2.0	1.0- 2.0	1.0- 3.0	0.7- 1.5	1.0- 2.0	0.7- 2.0	1.0- 3.0	0.7- 3.0	1.0- 3.0	0.7- 3.0	0.7- 4.0	2.0- 3.0
加工 / Machining												
切槽 Grooving	•	•	•	•	•	•	•	•	•	•	•	•
镗孔 Boring	•	•	•	•	•	•		•		•	•	
螺纹切削 Threading	•	•			•	•		•		•	•	
倒角 Chamfering	•	•			•	•		•		•	•	
端面切槽 Face Grooving	•	•	•							•		
镗孔和仿形加工 Boring and Profiling	•											

H

B111

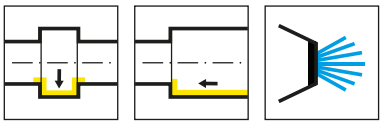

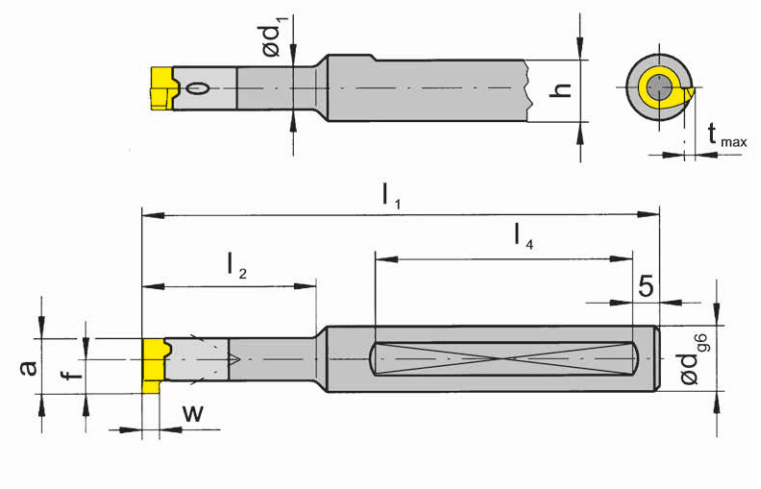

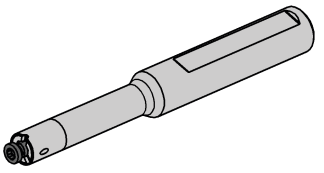

图示=右手型
Picture = right hand cutting version

产品型号 Part number	d	l_1	l_2	h	l_4	d_1	HWS
B111.0008.01A	8	80	-	-	-	-	308080R • 308080L
B111.0012.00	12	75	16.5	11	40	8	308080R • 308080L
B111.0012.01	12	95	29	11	50	8	308080R • 308080L
B111.0012.02	12	110	42	11	50	8	308080R • 308080L
B111.0012.03	12	120	56	11	50	8	308080R • 308080L

w,a,tmax和f见刀片
w, a, tmax and f see inserts

H

配件
Spare Parts

刀杆 Toolholder	锁紧螺钉 Clamping Screw	TORX PLUS®扳手 TORX PLUS® Wrench
B111...	**3.5.12T10EP**	**T10PL**

B111

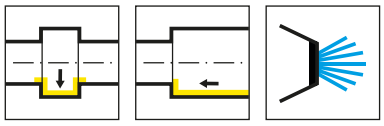

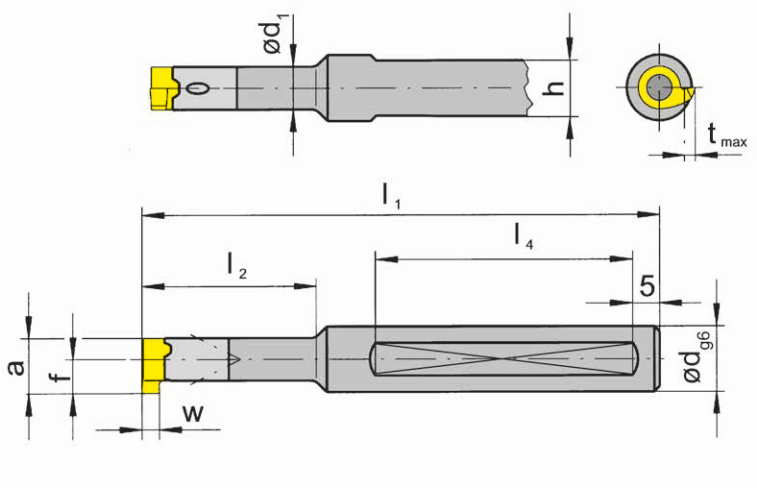

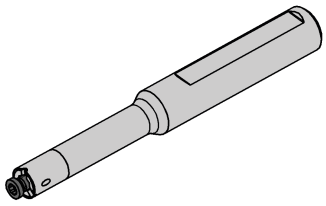

R=右手型-如图
R = right hand version shown

产品型号 Part number	d	l_1	l_2	h	l_4	d_1	HWS
B111.0012.2.00	12	75	16.5	11	40	8	308080R • 308080L
B111.0012.2.01	12	95	29	11	50	8	308080R • 308080L
B111.0012.2.02	12	110	42	11	50	8	308080R • 308080L
B111.0012.2.03	12	120	56	11	50	8	308080R • 308080L

w,a,tmax和f见刀片
w, a, tmax and f see inserts

H

配件
Spare Parts

刀杆 Toolholder	锁紧螺钉 Clamping Screw	TORX PLUS®扳手 TORX PLUS® Wrench
B111...	**3.5.12T10EP**	**T10PL**

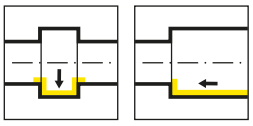

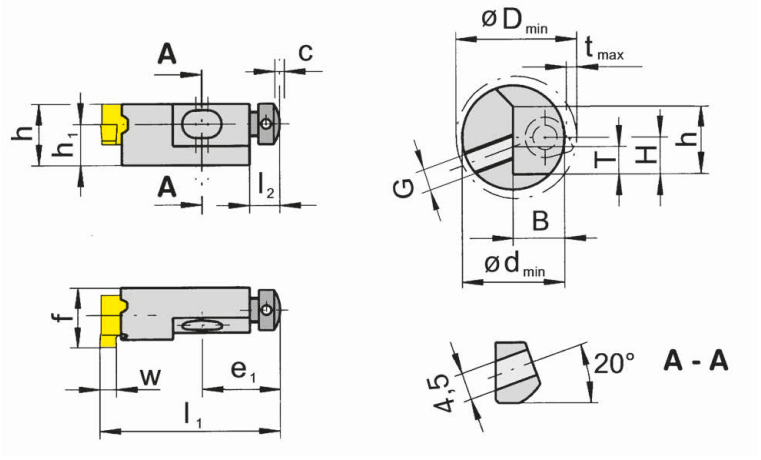

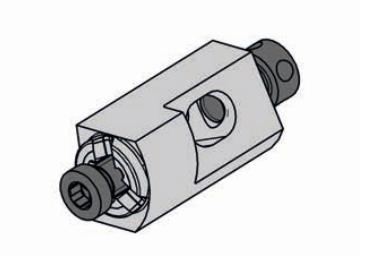

R=右手型-如图
R = right hand version shown

L=左手型
L = left hand version

产品型号 Part number	h	l_1	h_1	f	E_1	l_2	C	D_{min}	t_{max}	HWS
L125.0608.00	10	30	6	11.2	12.8	5	2	20	2.3	308080R • 308080L

w见刀片
w see inserts

H

配件
Spare Parts

刀夹 Cartridge	锁紧螺钉 Clamping Screw	TORX PLUS®扳手 TORX PLUS® Wrench
L125.0608.00	**3.5.12T10EP**	**T10PL**

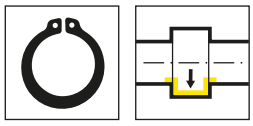

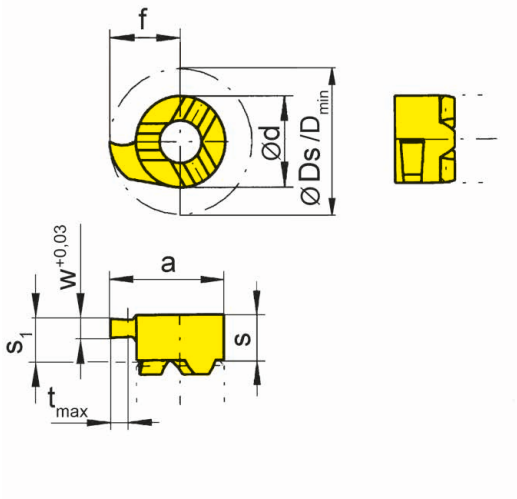

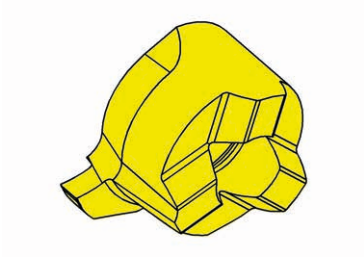

R=右手型-如图
R = right hand version shown

L=左手型
L = left hand version

硬质合金牌号
Carbide grades

▲ 库存
on stock

Δ 4周
4 weeks

产品型号 Part number	w	Nw	f	Ds	d	s	s_1	a	t_{max}	D_{min}	Z	HIS	MG12	EG55	TH35	TN35
R111.0070.00	0.74	0.7	6.7	13.4	8	4.15	3.95	10.7	1.2	11	1	308080R		▲	▲	▲
R111.0080.00	0.84	0.8	6.7	13.4	8	4.15	3.95	10.7	1.3	11	1	308080R		▲	▲	▲
R111.0090.00	0.94	0.9	6.7	13.4	8	4.15	3.95	10.7	1.5	11	1	308080R	▲	▲	▲	▲
L111.0070.00	0.74	0.7	6.7	13.4	8	4.15	3.95	10.7	1.2	11	1	308080L			Δ	▲
L111.0080.00	0.84	0.8	6.7	13.4	8	4.15	3.95	10.7	1.3	11	1	308080L			Δ	▲
L111.0090.00	0.94	0.9	6.7	13.4	8	4.15	3.95	10.7	1.5	11	1	308080L	▲		▲	▲

切削深度受限
not face cutting, limited depth of cut

	MG12	EG55	TH35	TN35
P	o	●	●	●
M	-	o	●	●
K	-	o	●	●
N	-	-	●	●
S	-	-	●	●
H	-	-	-	-

H

111

Ø ≥ 11 mm

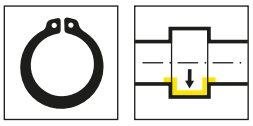

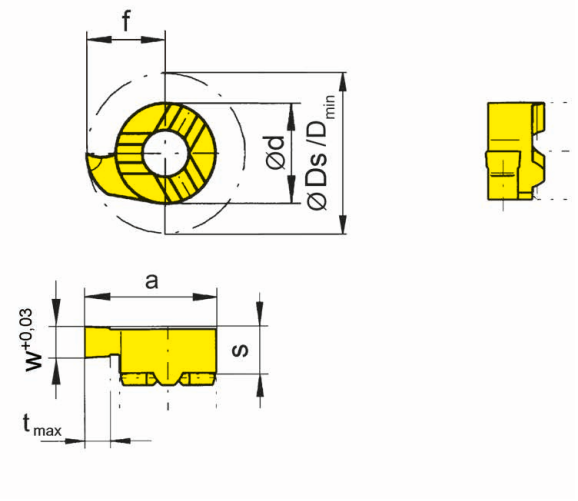

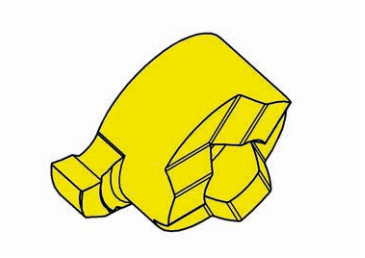

R=右手型-如图
R = right hand version shown

L=左手型
L = left hand version

硬质合金牌号
Carbide grades

▲ 库存
on stock

Δ 4周
4 weeks

产品型号 Part number	w	Nw	s	f	Ds	d	a	t_{max}	D_{min}	Z	HIS		MG12	EG55	TH35	TN35
R111.0110.00	1.19	1.1	3.95	6.7	13.4	8	10.7	2.3	11	1	308080R		▲	▲	▲	▲
R111.0130.00	1.39	1.3	3.95	6.7	13.4	8	10.7	2.3	11	1	308080R		▲	▲	▲	▲
R111.0160.00	1.69	1.6	3.95	6.7	13.4	8	10.7	2.3	11	1	308080R		▲	▲	▲	▲
L111.0110.00	1.19	1.1	3.95	6.7	13.4	8	10.7	2.3	11	1	308080L		▲	▲	▲	▲
L111.0130.00	1.39	1.3	3.95	6.7	13.4	8	10.7	2.3	11	1	308080L		Δ	Δ	▲	▲
L111.0160.00	1.69	1.6	3.95	6.7	13.4	8	10.7	2.3	11	1	308080L		Δ	▲	▲	▲
												P	o	●	●	●
												M	-	o	●	●
												K	-	o	●	●
												N	-	-	●	●
												S	-	-	●	●
												H	-	-	-	-

H

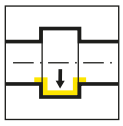

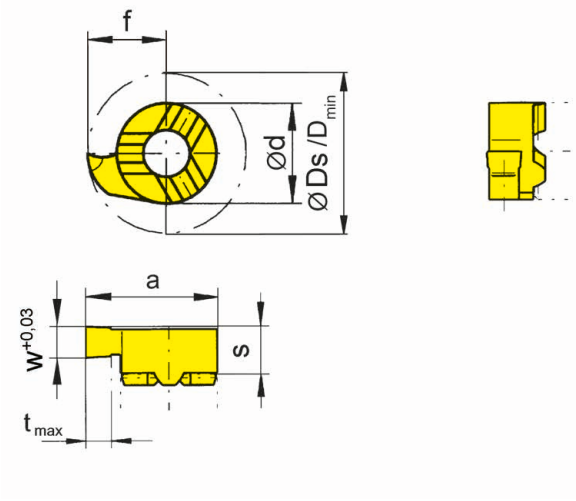

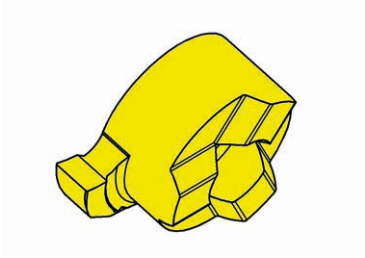

R=右手型-如图
R = right hand version shown

L=左手型
L = left hand version

硬质合金牌号
Carbide grades

▲ 库存
on stock

Δ 4周
4 weeks

产品型号 Part number	w	s	f	Ds	d	a	t_{max}	D_{min}	Z	HIS		MG12	EG55	TH35	TN35
R111.0100.1.00	1	3.95	6.7	13.4	8	10.7	2.3	11	1	308080R			Δ		▲
R111.0150.00	1.5	3.95	6.7	13.4	8	10.7	2.3	11	1	308080R		▲	▲	▲	▲
R111.0200.00	2	3.95	6.7	13.4	8	10.7	2.3	11	1	308080R		▲	▲	▲	▲
R111.0250.00	2.5	3.95	6.7	13.4	8	10.7	2.3	11	1	308080R		▲	▲	▲	▲
R111.0300.00	3	3.95	6.7	13.4	8	10.7	2.3	11	1	308080R		▲	▲	▲	▲
L111.0100.1.00	1	3.95	6.7	13.4	8	10.7	2.3	11	1	308080L			Δ		▲
L111.0150.00	1.5	3.95	6.7	13.4	8	10.7	2.3	11	1	308080L		▲	▲	▲	▲
L111.0200.00	2	3.95	6.7	13.4	8	10.7	2.3	11	1	308080L		▲	▲	▲	▲
L111.0250.00	2.5	3.95	6.7	13.4	8	10.7	2.3	11	1	308080L		▲		▲	▲
L111.0300.00	3	3.95	6.7	13.4	8	10.7	2.3	11	1	308080L		▲	▲	▲	▲
											P	o	●	●	●
											M	-	o	●	●
											K	-	o	●	●
											N	-	-	●	●
											S	-	-	●	●
											H	-	-	-	-

H

S111 Ø ≥ 11 mm

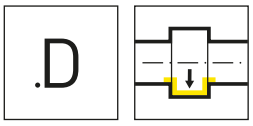

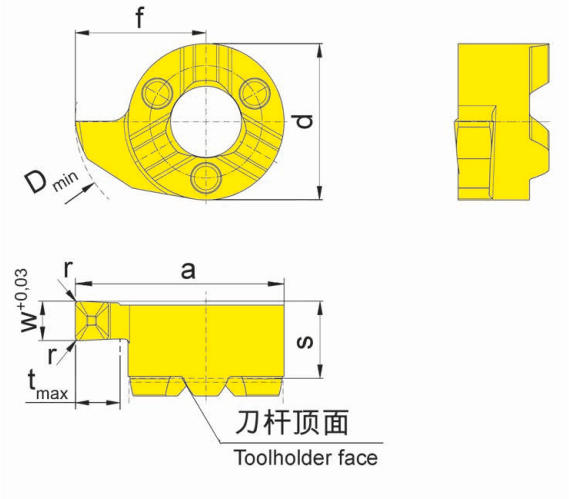

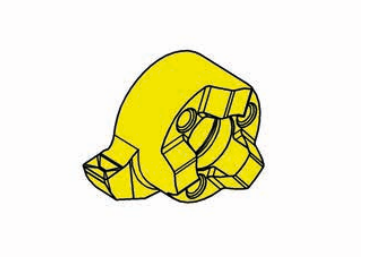

R=右手型-如图
R = right hand version shown

L=左手型
L = left hand version

▲ 库存
on stock

Δ 4周
4 weeks

硬质合金牌号
Carbide grades

产品型号 Part number	w	s	f	a	r	d	t_{max}	D_{min}	HIS		EG55	TH35	TN35
RS111.0150.D1	1.5	3.95	6.7	10.7	0.1	8	2.3	11	308080R		▲	▲	
RS111.0200.D2	2	3.95	6.7	10.7	0.2	8	2.3	11	308080R		▲	▲	
RS111.0250.D2	2.5	3.95	6.7	10.7	0.2	8	2.3	11	308080R		▲	▲	Δ
LS111.0150.D1	1.5	3.95	6.7	10.7	0.1	8	2.3	11	308080L		Δ	▲	
LS111.0200.D2	2	3.95	6.7	10.7	0.2	8	2.3	11	308080L		▲	▲	
LS111.0250.D2	2.5	3.95	6.7	10.7	0.2	8	2.3	11	308080L		Δ	▲	
										P	●	●	●
										M	o	●	●
										K	o	●	●
										N	-	●	●
										S	-	●	●
										H	-	-	-

H

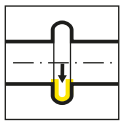

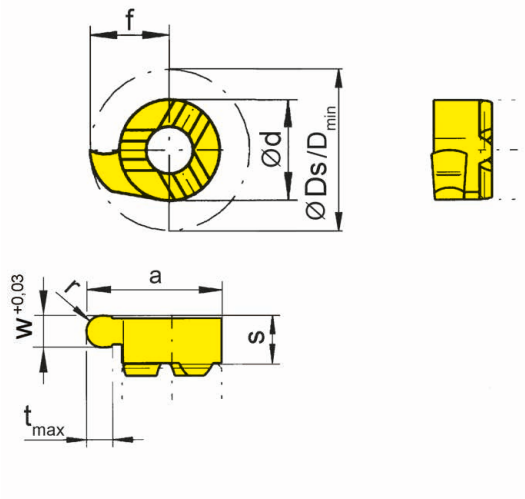

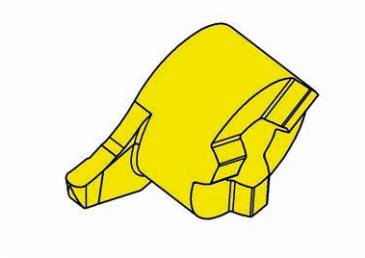

R=右手型-如图
R = right hand version shown

L=左手型
L = left hand version

硬质合金牌号
Carbide grades

▲ 库存
on stock

Δ 4周
4 weeks

产品型号 Part number	w	f	Ds	r	d	s	a	t_{max}	D_{min}	Z	HIS	MG12	EG55	TH35	TN35
R111.0004.08	0.8	6.7	13.4	0.4	8	3.95	10.7	2.3	11	1	308080R		▲	▲	▲
R111.0006.12	1.2	6.7	13.4	0.6	8	3.95	10.7	2.3	11	1	308080R	▲	▲	▲	▲
R111.0009.18	1.8	6.7	13.4	0.9	8	3.95	10.7	2.3	11	1	308080R	▲	▲	▲	▲
R111.0010.20	2	6.7	13.4	1	8	3.95	10.7	2.3	11	1	308080R	▲	▲	▲	▲
R111.0015.30	3	6.7	13.4	1.5	8	3.95	10.7	2.3	11	1	308080R	▲	▲	▲	▲
L111.0004.08	0.8	6.7	13.4	0.4	8	3.95	10.7	2.3	11	1	308080L		▲	▲	▲
L111.0006.12	1.2	6.7	13.4	0.6	8	3.95	10.7	2.3	11	1	308080L	Δ	▲	▲	▲
L111.0009.18	1.8	6.7	13.4	0.9	8	3.95	10.7	2.3	11	1	308080L	Δ		▲	▲
L111.0010.20	2	6.7	13.4	1	8	3.95	10.7	2.3	11	1	308080L	▲		▲	▲
L111.0015.30	3	6.7	13.4	1.5	8	3.95	10.7	2.3	11	1	308080L	Δ		▲	▲

	MG12	EG55	TH35	TN35
P	o	●	●	●
M	-	o	●	●
K	-	o	●	●
N	-	-	●	●
S	-	-	●	●
H	-	-	-	-

H

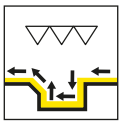

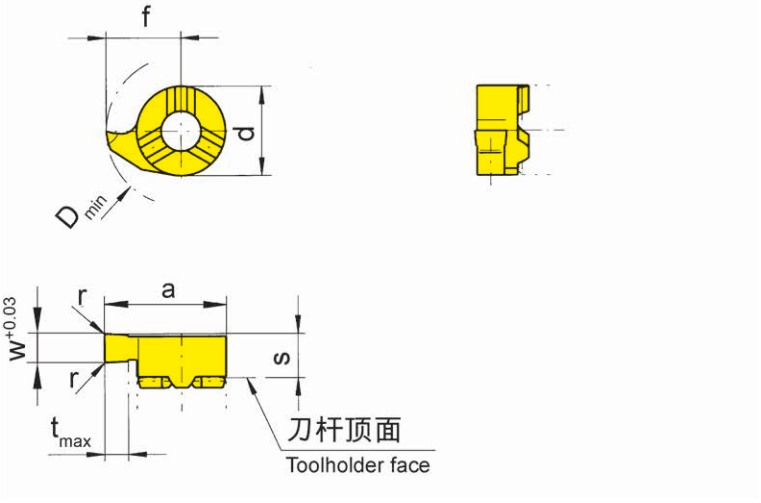

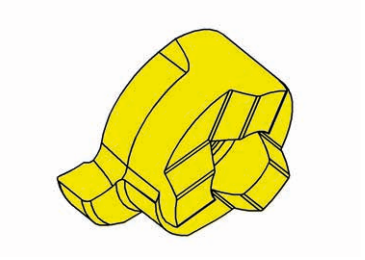

R=右手型-如图
R = right hand version shown

L=左手型
L = left hand version

硬质合金牌号
Carbide grades

▲ 库存
on stock

Δ 4周
4 weeks

产品型号 Part number	w	s	f	a	r	d	t_{max}	D_{min}	HIS		MG12	EG55	TH35	TI25	TN35
R111.0200.02	2	3.95	6.7	10.7	0.2	8	2.3	11	308080R		▲	▲	▲	▲	▲
L111.0200.02	2	3.95	6.7	10.7	0.2	8	2.3	11	308080L		▲	▲	▲	Δ	▲
										P	o	●	●	●	●
										M	-	o	●	●	●
										K	-	o	●	●	●
										N	-	-	●	●	●
										S	-	-	●	●	●
										H	-	-	-	-	-

H

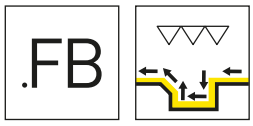

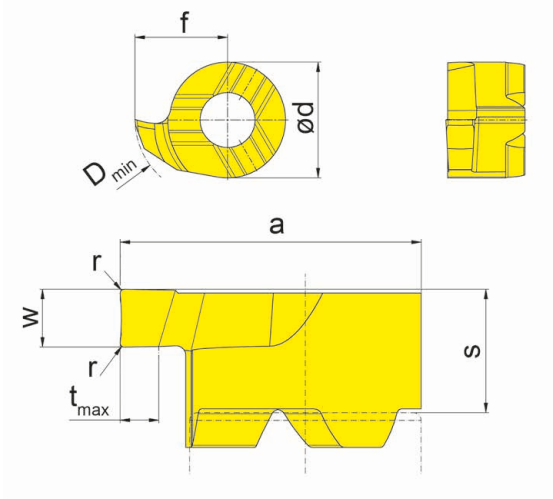

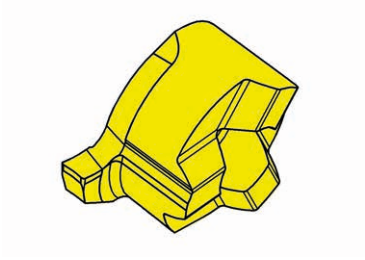

R=右手型-如图
R = right hand version shown

L=左手型
L = left hand version

硬质合金牌号
Carbide grades

▲ 库存
on stock

Δ 4周
4 weeks

产品型号 Part number	w	s	f	a	r	d	t_{max}	D_{min}	HIS		EG35
R111.FB10.01	1	3.95	6.7	10.7	0.1	8	2.3	11	308080R		▲
R111.FB15.01	1.5	3.95	6.7	10.7	0.1	8	2.3	11	308080R		▲
L111.FB10.01	1	3.95	6.7	10.7	0.1	8	2.3	11	308080L		▲
L111.FB15.01	1.5	3.95	6.7	10.7	0.1	8	2.3	11	308080L		▲
										P	●
										M	●
										K	o
										N	-
										S	-
										H	-

H

计算槽的最小可加工宽度 w_x
Calculation of the smallest possible width of groove w_x

例如 R111.FB10.01
Example

w_x = 2 x 槽宽 w - 2 x 刀尖圆角 R

w_x = 2 x Width of insert w - 2 x Corner radius insert R

w_x = 2 x 1 mm - 2 x 0.1 mm

w_x = 1.8 mm

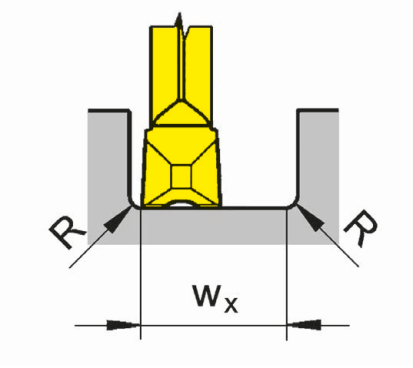

加工路径
Processing flow

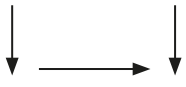

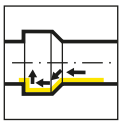

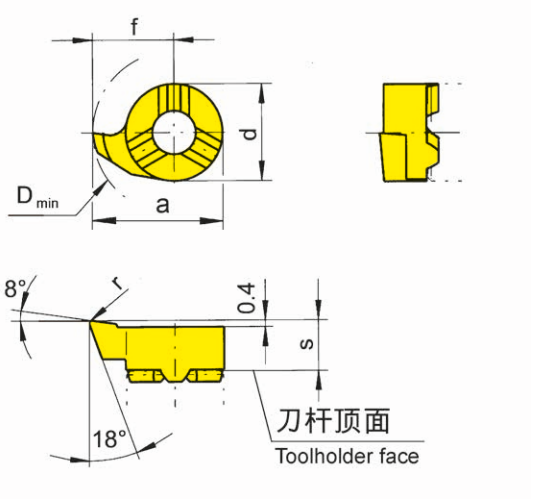

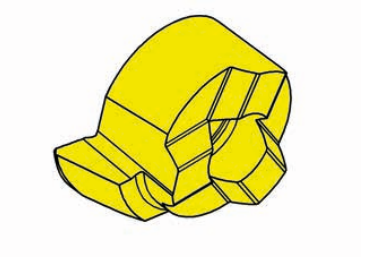

R=右手型-如图
R = right hand version shown

L=左手型
L = left hand version

硬质合金牌号
Carbide grades

▲ 库存
on stock

Δ 4周
4 weeks

产品型号 Part number	s	f	a	r	d	D_{min}	HIS	MG12	EG55	TH35	TI25	TN35
R111.1855.02	3.95	5.5	9.5	0.2	8	9.8	308080R	▲	▲	▲	▲	▲
R111.1867.02	3.95	6.7	10.7	0.2	8	11	308080R	▲	▲	▲	▲	▲
L111.1855.02	3.95	5.5	9.5	0.2	8	9.8	308080L	▲	▲	▲	▲	▲
L111.1867.02	3.95	6.7	10.7	0.2	8	11	308080L	▲	▲	▲	▲	▲
								P o	●	●	●	●
								M -	o	●	●	●
								K -	o	●	●	●
								N -	-	●	●	●
								S -	-	●	●	●
								H -	-	-	-	-

H

S111 Ø ≥ 11 mm

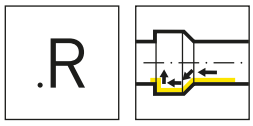

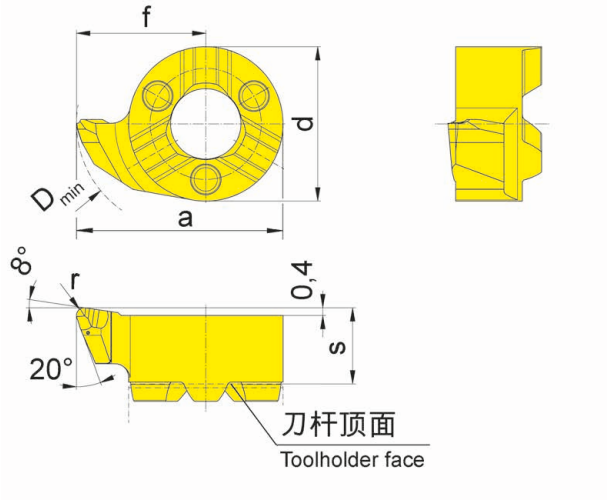

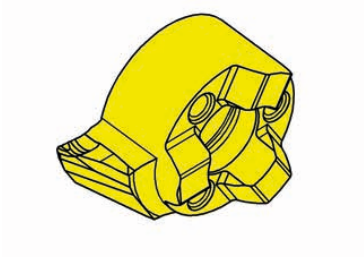

R=右手型-如图
R = right hand version shown

L=左手型
L = left hand version

▲ 库存
on stock

Δ 4周
4 weeks

硬质合金牌号
Carbide grades

产品型号 Part number	s	f	a	r	d	D_{min}	HIS		EG55	TH35
RS111.1867.R2	3.95	6.7	10.7	0.2	8	11	308080R		▲	▲
RS111.1867.R4	3.95	6.7	10.7	0.4	8	11	308080R		▲	▲
LS111.1867.R2	3.95	6.7	10.7	0.2	8	11	308080L		▲	▲
LS111.1867.R4	3.95	6.7	10.7	0.4	8	11	308080L		▲	▲
								P	●	●
								M	o	●
								K	o	●
								N	-	●
								S	-	●
								H	-	-

H

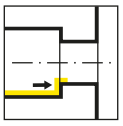

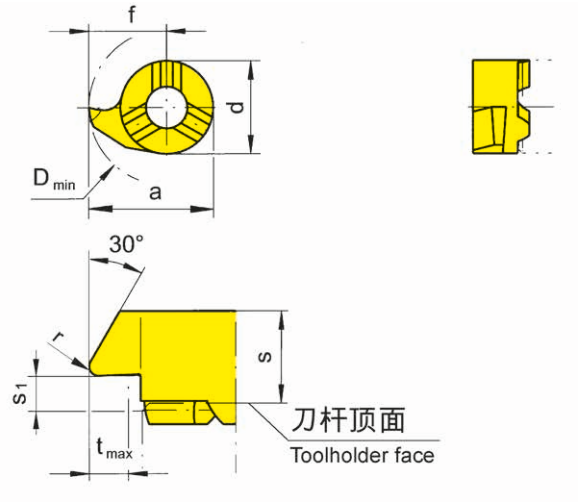

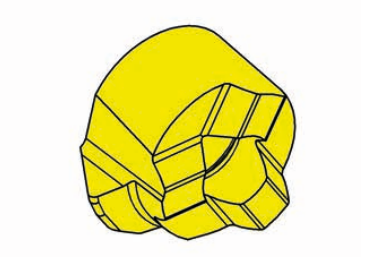

R=右手型-如图
R = right hand version shown

L=左手型
L = left hand version

▲ 库存
on stock

Δ 4周
4 weeks

硬质合金牌号
Carbide grades

产品型号 Part number	s	f	a	r	s_1	d	t_{max}	D_{min}	HIS		EG55	TH35	TN35
R111.3067.02	4.15	6.7	10.7	0.2	1.4	8	2.3	11	308080R		▲	▲	▲
R111.3067.04	4.15	6.7	10.7	0.4	1.4	8	2.3	11	308080R		Δ	▲	Δ
L111.3067.02	4.15	6.7	10.7	0.2	1.4	8	2.3	11	308080L		▲	▲	▲
L111.3067.04	4.15	6.7	10.7	0.4	1.4	8	2.3	11	308080L		Δ	Δ	▲
										P	●	●	●
										M	o	●	●
										K	o	●	●
										N	-	●	●
										S	-	●	●
										H	-	-	-

H

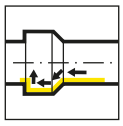

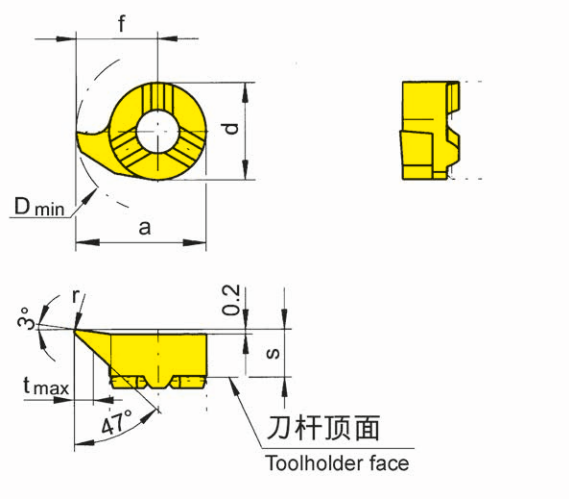

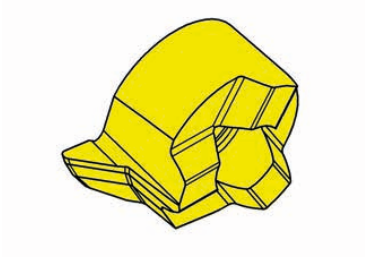

R=右手型-如图
R = right hand version shown

L=左手型
L = left hand version

▲ 库存
on stock

Δ 4周
4 weeks

硬质合金牌号
Carbide grades

产品型号 Part number	s	f	a	r	d	t_{max}	D_{min}	HIS		EG55	TH35	TI25	TN35
R111.4767.02	3.95	6.7	10.7	0.2	8	2.3	11	308080R		▲	▲	▲	▲
R111.4767.04	3.95	6.7	10.7	0.4	8	2.3	11	308080R		▲	▲		
L111.4767.02	3.95	6.7	10.7	0.2	8	2.3	11	308080L		▲	▲	▲	▲
L111.4767.04	3.95	6.7	10.7	0.4	8	2.3	11	308080L		▲	▲	Δ	
									P	●	●	●	●
									M	o	●	●	●
									K	o	●	●	●
									N	-	●	●	●
									S	-	●	●	●
									H	-	-	-	-

H

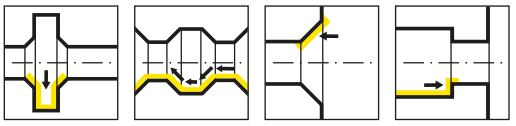

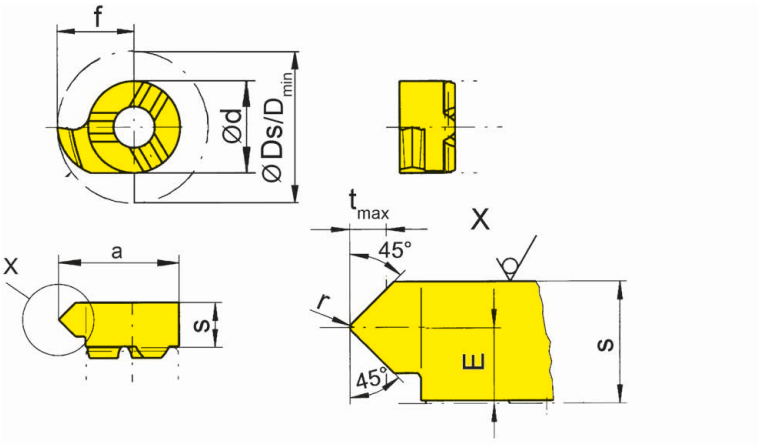

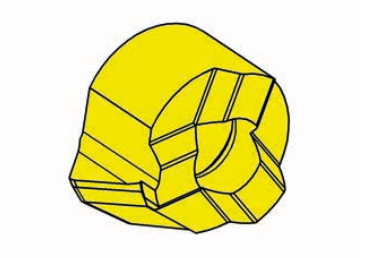

R=右手型-如图
R = right hand version shown

L=左手型
L = left hand version

▲ 库存
on stock

硬质合金牌号
Carbide grades

Δ 4周
4 weeks

产品型号 Part number	E	f	Ds	r	d	s	a	t_{max}	D_{min}	Z	HIS		EG55	TN35
R111.4545.02	2.4	6.7	13.4	0.2	8	4.15	10.7	1.5	11	1	308080R		▲	▲
L111.4545.02	2.4	6.7	13.4	0.2	8	4.15	10.7	1.5	11	1	308080L		▲	▲
												P	●	●
												M	o	●
												K	o	●
												N	-	●
												S	-	●
												H	-	-

H

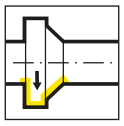

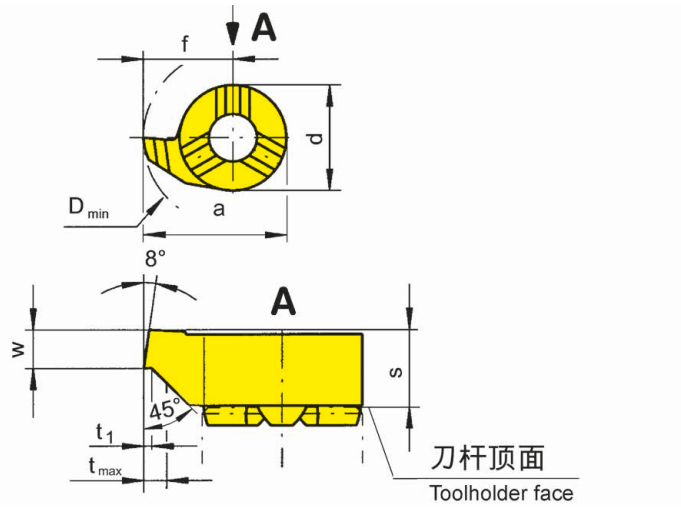

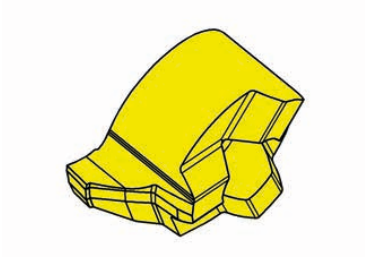

R=右手型-如图
R = right hand version shown

L=左手型
L = left hand version

硬质合金牌号
Carbide grades

▲ 库存
on stock

Δ 4周
4 weeks

产品型号 Part number	w	s	a	f	d	t_{max}	t_{1max}	D_{min}	HIS		MG12	EG55	TI25
R111.0810.45	1	3.95	10.7	6.7	8	1.5	0.2	11	308080R		▲	▲	▲
L111.0810.45	1	3.95	10.7	6.7	8	1.5	0.2	11	308080L		Δ	▲	▲
										P	o	●	●
										M	-	o	●
										K	-	o	●
										N	-	-	●
										S	-	-	●
										H	-	-	-

H

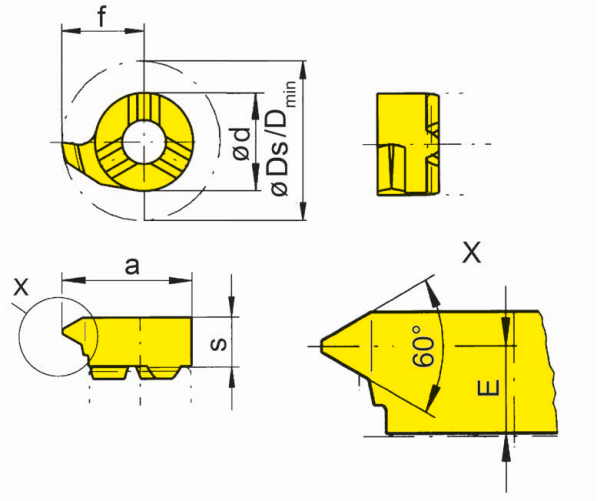

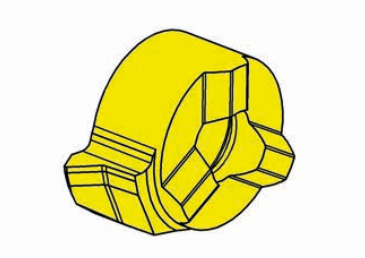

R=右手型-如图
R = right hand version shown

L=左手型
L = left hand version

硬质合金牌号
Carbide grades

▲ 库存
on stock

Δ 4周
4 weeks

产品型号 Part number	P	P_{max}	E	s	f	a	d	Ds	D_{min}	HIS	MG12	EG55	TH35	TN35
R111.0205.01	0.5	0.75	3.5	4.15	6.7	10.7	8	13.4	11	308080R		▲	▲	▲
R111.0510.01	1	1.25	3.3	4.15	6.7	10.7	8	13.4	11	308080R		▲	▲	▲
R111.0815.01	1.5	1.75	3.3	4.15	6.7	10.7	8	13.4	11	308080R		▲	▲	▲
R111.1020.01	2	2	3	4.15	6.7	10.7	8	13.4	11	308080R		▲	▲	▲
R111.1325.01	2.5		2.8	4.15	6.7	10.7	8	13.4	11	308080R	Δ	▲	▲	▲
L111.0205.01	0.5	0.75	3.5	4.15	6.7	10.7	8	13.4	11	308080L		Δ	Δ	▲
L111.0510.01	1	1.25	3.3	4.15	6.7	10.7	8	13.4	11	308080L		▲	Δ	▲
L111.0815.01	1.5	1.75	3.3	4.15	6.7	10.7	8	13.4	11	308080L		▲	Δ	▲
L111.1020.01	2	2	3	4.15	6.7	10.7	8	13.4	11	308080L		Δ	Δ	▲
L111.1325.01	2.5		2.8	4.15	6.7	10.7	8	13.4	11	308080L		Δ	Δ	▲

	MG12	EG55	TH35	TN35
P	o	●	●	●
M	-	o	●	●
K	-	o	●	●
N	-	-	●	●
S	-	-	●	●
H	-	-	-	-

H

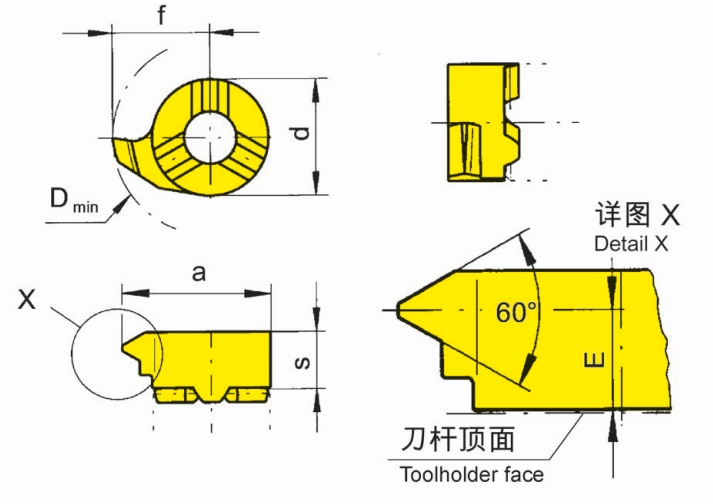

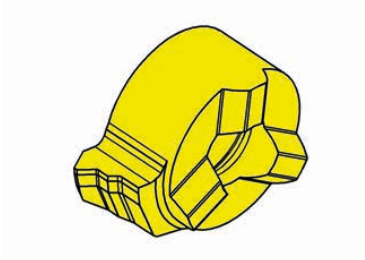

R=右手型-如图
R = right hand version shown

L=左手型
L = left hand version

▲ 库存
on stock

Δ 4周
4 weeks

硬质合金牌号
Carbide grades

产品型号 Part number	P	E	f	a	d	s	D_{min}	HIS	MG12	EG55	TI25	TN35
R111.0510.02	1	3.3	6.7	10.7	8	4.15	11	308080R		▲		▲
R111.0815.02	1.5	3.3	6.7	10.7	8	4.15	11	308080R	▲	▲	Δ	▲
R111.1020.02	2	3	6.7	10.7	8	4.15	11	308080R		▲	Δ	▲
R111.1325.02	2.5	2.8	6.7	10.7	8	4.15	11	308080R		▲		▲
R111.1630.02	3	2.8	6.7	10.7	8	4.15	11	308080R		▲	Δ	▲
L111.0510.02	1	3.3	6.7	10.7	8	4.15	11	308080L		Δ		▲
L111.0815.02	1.5	3.3	6.7	10.7	8	4.15	11	308080L	Δ	▲	Δ	▲
L111.1020.02	2	3	6.7	10.7	8	4.15	11	308080L		▲		▲
L111.1325.02	2.5	2.8	6.7	10.7	8	4.15	11	308080L		Δ		Δ
L111.1630.02	3	2.8	6.7	10.7	8	4.15	11	308080L		Δ		Δ

	MG12	EG55	TI25	TN35
P	o	●	●	●
M	-	o	●	●
K	-	o	●	●
N	-	-	●	●
S	-	-	●	●
H	-	-	-	-

H

S111 Ø ≥ 11 mm

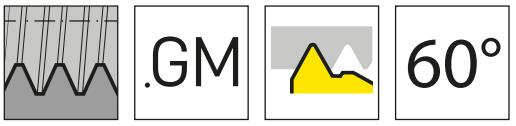

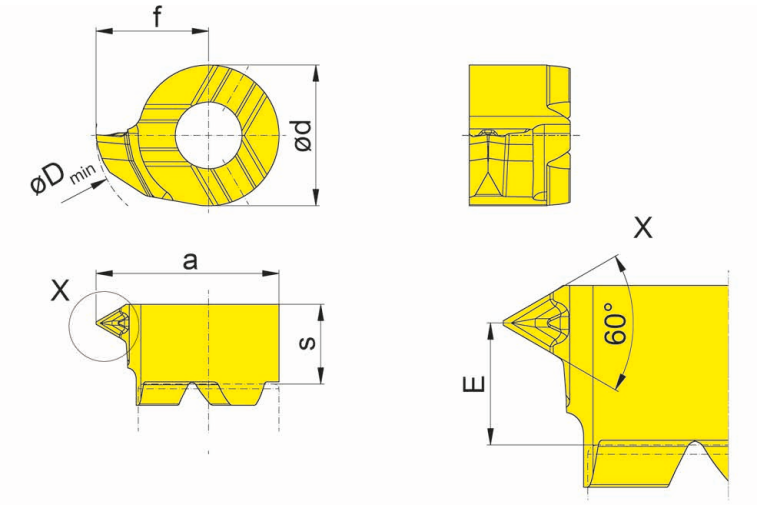

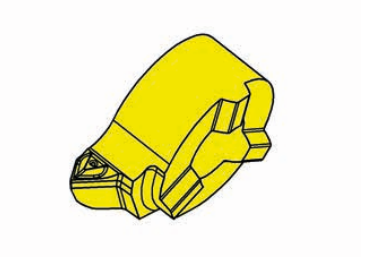

R=右手型-如图
R = right hand version shown

硬质合金牌号
Carbide grades

▲ 库存
on stock

Δ 4周
4 weeks

产品型号 Part number	P	P_{max}	E	f	a	d	s	D_{min}	HIS		EG55
RS111.0205.GM1	0.5	0.75	3.1	6.7	10.7	8	4.1	11	308080R		▲
RS111.0510.GM1	1	1.25	3.1	6.7	10.7	8	4.1	11	308080R		▲
RS111.0815.GM1	1.5	1.75	3.1	6.7	10.7	8	4.1	11	308080R		▲
RS111.1020.GM1	2	2	3.1	6.7	10.7	8	4.1	11	308080R		▲
LS111.0205.GM1	0.5	0.75	3.1	6.7	10.7	8	4.1	11	308080L		▲
LS111.0510.GM1	1	1.25	3.1	6.7	10.7	8	4.1	11	308080L		▲
LS111.0815.GM1	1.5	1.75	3.1	6.7	10.7	8	4.1	11	308080L		▲
LS111.1020.GM1	2	2	3.1	6.7	10.7	8	4.1	11	308080L		▲
										P	●
										M	o
										K	o
										N	-
										S	-
										H	-

H

S111 Ø ≥ 11 mm

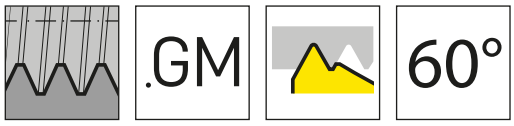

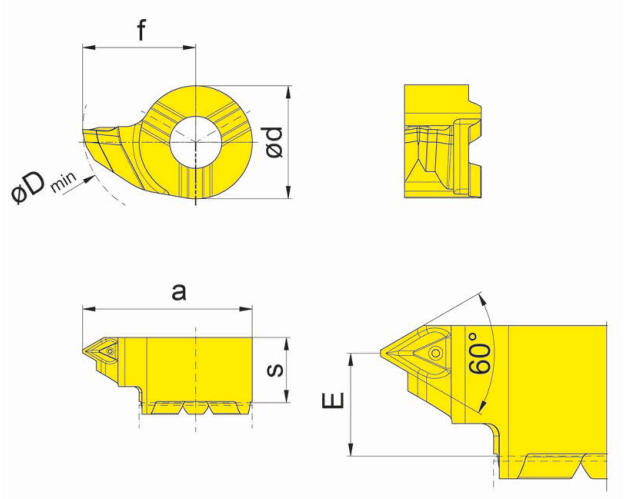

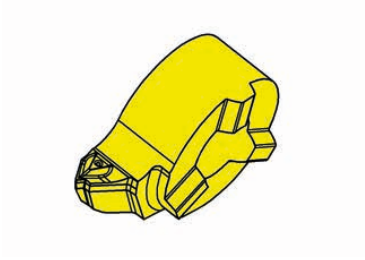

R=右手型-如图
R = right hand version shown

硬质合金牌号
Carbide grades

▲ 库存
on stock

Δ 4周
4 weeks

产品型号 Part number	P	E	f	a	d	s	D_{min}	HIS		EG55
RS111.0510.GM2	1	3.1	6.7	10.7	8	4.1	11	308080R		▲
RS111.0815.GM2	1.5	3.1	6.7	10.7	8	4.1	11	308080R		▲
RS111.1020.GM2	2	3.1	6.7	10.7	8	4.1	11	308080R		▲
LS111.0510.GM2	1	3.1	6.7	10.7	8	4.1	11	308080L		▲
LS111.0815.GM2	1.5	3.1	6.7	10.7	8	4.1	11	308080L		▲
LS111.1020.GM2	2	3.1	6.7	10.7	8	4.1	11	308080L		▲
									P	●
									M	o
									K	o
									N	-
									S	-
									H	-

H

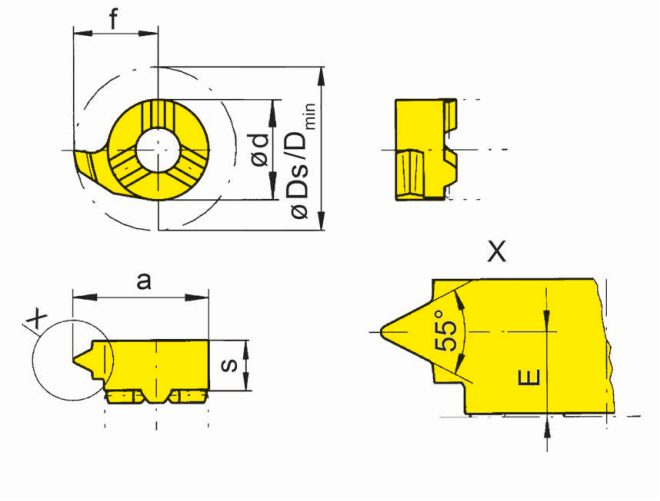

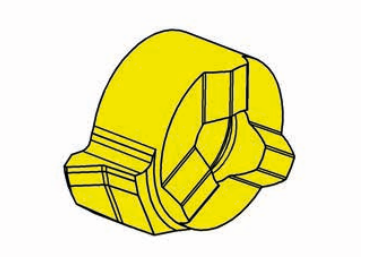

R=右手型-如图
R = right hand version shown

L=左手型
L = left hand version

硬质合金牌号
Carbide grades

▲ 库存
on stock

Δ 4周
4 weeks

产品型号 Part number	TPI	E	s	f	a	d	Ds	D_{min}	HIS	EG55	TA45	TN35
R111.5514.02	14	2.5	4.15	6.7	10.7	8	13.4	11	308080R	▲		▲
R111.5519.02	19	2.9	4.15	6.7	10.7	8	13.4	11	308080R	▲	Δ	▲
L111.5514.02	14	2.5	4.15	6.7	10.7	8	13.4	11	308080L	Δ		▲
L111.5519.02	19	2.9	4.15	6.7	10.7	8	13.4	11	308080L		Δ	▲

	EG55	TA45	TN35
P	●	●	●
M	o	●	●
K	o	●	●
N	-	●	●
S	-	●	●
H	-	-	-

H

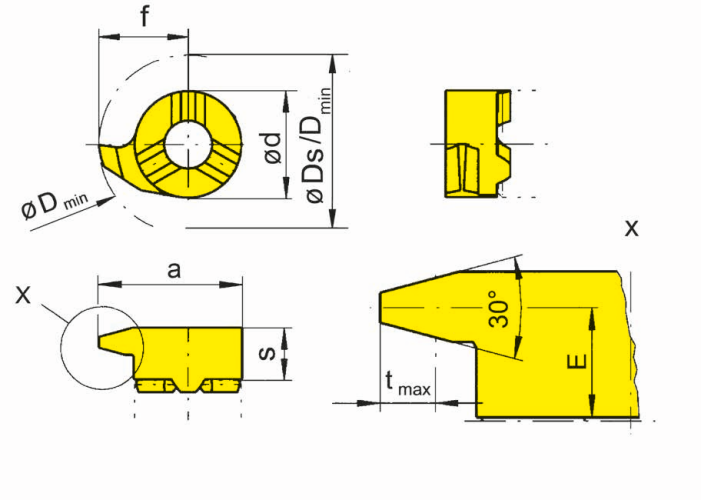

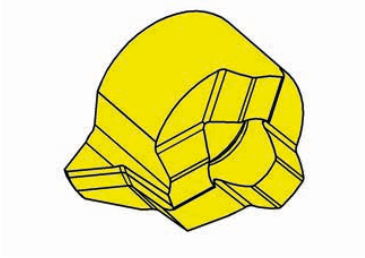

R=右手型-如图
R = right hand version shown

L=左手型
L = left hand version

▲ 库存
on stock

Δ 4周
4 weeks

硬质合金牌号
Carbide grades

产品型号 Part number	P	E	f	a	d	s	D_{min}	Ds	HIS	MG12	EG55	TN35
R111.1015.01	1.5	3.5	6.7	10.7	8	4.15	11	13.4	308080R		▲	▲
R111.1220.01	2	3.3	6.7	10.7	8	4.15	11	13.4	308080R		▲	▲
R111.1730.01	3	3	6.7	10.7	8	4.15	11	13.4	308080R	Δ	▲	▲
R111.2240.01	4	2.5	6.7	10.7	8	4.15	11	13.4	308080R		▲	▲
L111.1015.01	1.5	3.5	6.7	10.7	8	4.15	11	13.4	308080L		Δ	Δ
L111.1220.01	2	3.3	6.7	10.7	8	4.15	11	13.4	308080L		▲	▲
L111.1730.01	3	3	6.7	10.7	8	4.15	11	13.4	308080L	Δ	▲	▲
L111.2240.01	4	2.5	6.7	10.7	8	4.15	11	13.4	308080L		▲	▲

	MG12	EG55	TN35
P	o	●	●
M	-	o	●
K	-	o	●
N	-	-	●
S	-	-	●
H	-	-	-

H

11P

刀杆和刀片

Toolholder and Inserts

I

刀杆
Toolholder
B11P

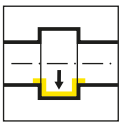

页/Page
274-275

刀片
Insert
11P/S11P

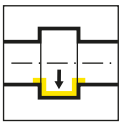

页/Page
276, 279

页/Page
277, 280

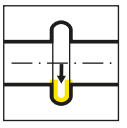

页/Page
278

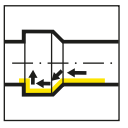

页/Page
281, 285

页/Page
282

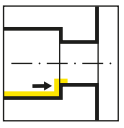

页/Page
283

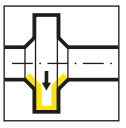

页/Page
284

I

孔径 Bore Ø	产品线 / Product line											
	105	109	110	106	107	108	11P	111	11P	114	116	18P
≥ 0.2	•											
≥ 0.5	•											
≥ 0.7	•											
≥ 1.0	•											
≥ 1.5	•											
≥ 2.0	•											
≥ 3.0	•											
≥ 4.0	•											
≥ 5.0	•											
≥ 6.0	•	•	•	•								
≥ 6.8		•	•	•								
≥ 7.0		•			•							
≥ 7.8			•		•	•						
≥ 8.0			•		•	•						
≥ 9.0			•		•	•						
≥ 10.0			•				•	•	•			
≥ 10.5									•			
≥ 11.0								•	•			
≥ 11.5									•			
≥ 13.8										•		
≥ 14.0										•	•	
≥ 16.0											•	
≥ 16.5										(•)		
≥ 18.0												•
槽深 Depth of groove	2.5	2.5	4.0	0.8	2.0	1.0	3.0	2.3	3.5	4.0 (6.5)	4.3	8.0
槽宽 Width of groove	0.5- 2.0	1.0- 2.0	1.0- 3.0	0.7- 1.5	1.0- 2.0	0.7- 2.0	1.0- 3.0	0.7- 3.0	1.0- 3.0	0.7- 3.0	0.7- 4.0	2.0- 3.0
加工 / Machining												
切槽 Grooving	•	•	•	•	•	•	•	•	•	•	•	•
镗孔 Boring	•	•	•	•	•	•		•		•	•	
螺纹切削 Threading	•	•			•	•		•		•	•	
倒角 Chamfering	•	•			•	•		•		•	•	
端面切槽 Face Grooving	•	•	•							•		
镗孔和仿形加工 Boring and Profiling	•											

I

B11P

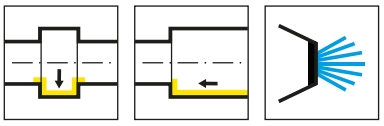

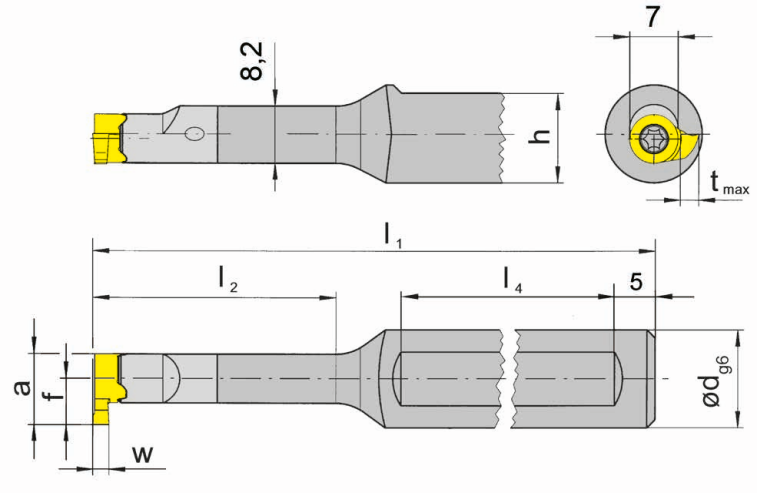

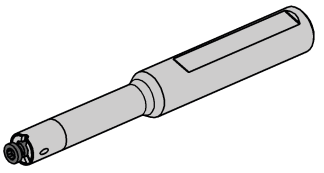

R=右手型-如图
R = right hand version shown

L=左手型
L = left hand version

产品型号 Part number	d	l_1	l_2	h	l_4	HWS
RB11P.0012.00	12	75	15	11	40	11P070R
RB11P.0012.01	12	95	26	11	50	11P070R
RB11P.0012.02	12	110	37	11	50	11P070R
RB11P.0012.03	12	120	50	11	50	11P070R
LB11P.0012.00	12	75	15	11	40	11P070L
LB11P.0012.01	12	95	26	11	50	11P070L
LB11P.0012.02	12	110	37	11	50	11P070L
LB11P.0012.03	12	120	50	11	50	11P070L

w,a,tmax和f见刀片
w, a, tmax and f see inserts

I

配件
Spare Parts

刀杆 Toolholder	锁紧螺钉 Clamping Screw	TORX PLUS®扳手 TORX PLUS® Wrench
R/LB11P...	**3.10T9P**	**T9PL**

B11P

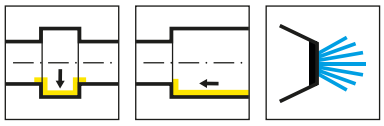

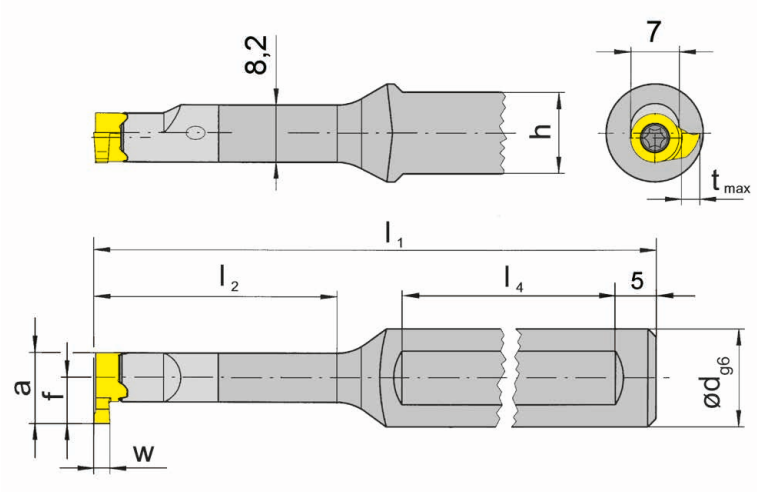

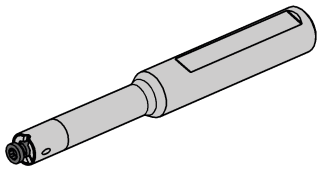

R=右手型-如图
R = right hand version shown

L=左手型
L = left hand version

产品型号 Part number	d	l_1	l_2	h	l_4	HWS
RB11P.0012.2.00	12	75	15	11	40	11P070R
RB11P.0012.2.01	12	95	26	11	50	11P070R
RB11P.0012.2.02	12	110	37	11	50	11P070R
RB11P.0012.2.03	12	120	50	11	50	11P070R
LB11P.0012.2.00	12	75	15	11	40	11P070L
LB11P.0012.2.01	12	95	26	11	50	11P070L
LB11P.0012.2.02	12	110	37	11	50	11P070L
LB11P.0012.2.03	12	120	50	11	50	11P070L

w,a,tmax和f见刀片
w, a, tmax and f see inserts

I

配件
Spare Parts

刀杆 Toolholder	锁紧螺钉 Clamping Screw	TORX PLUS®扳手 TORX PLUS® Wrench
R/LB11P...	**3.10T9P**	**T9PL**

11P

Ø ≥ 10.5 mm

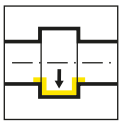

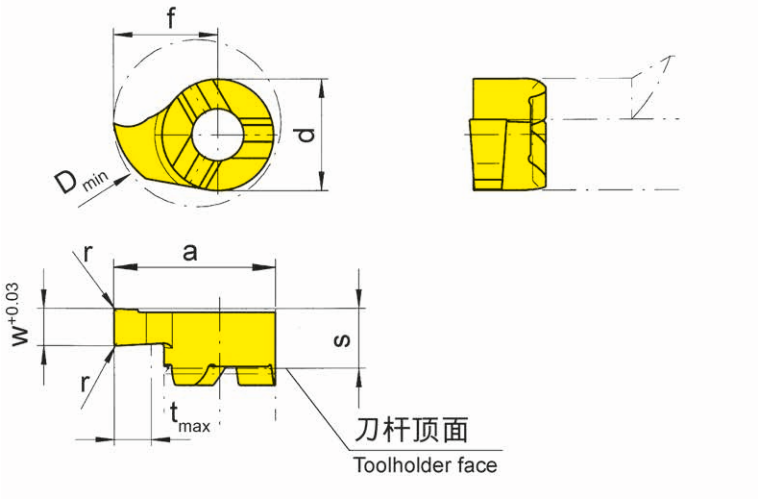

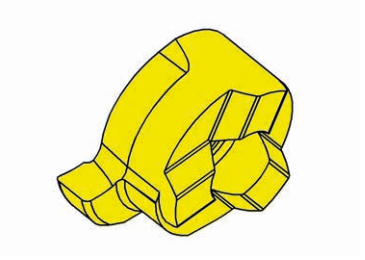

R=右手型-如图
R = right hand version shown

L=左手型
L = left hand version

▲ 库存
on stock

Δ 4周
4 weeks

硬质合金牌号
Carbide grades

产品型号 Part number	w	s	f	a	r	d	t_{max}	D_{min}	HIS		EG55	TH35
R11P.0100.1.00	1	4.2	6.5	10	-	7	2.5	10.5	11P070R			▲
R11P.0150.1.00	1.5	4.2	6.5	10	-	7	2.5	10.5	11P070R		▲	▲
R11P.0200.1.02	2	4.2	6.5	10	0.2	7	2.5	10.5	11P070R			▲
R11P.0250.1.02	2.5	4.2	6.5	10	0.2	7	2.5	10.5	11P070R		▲	▲
R11P.0300.1.02	3	4.2	6.5	10	0.2	7	2.5	10.5	11P070R		Δ	▲
L11P.0100.1.00	1	4.2	6.5	10	-	7	2.5	10.5	11P070L		Δ	▲
L11P.0150.1.00	1.5	4.2	6.5	10	-	7	2.5	10.5	11P070L		Δ	Δ
L11P.0200.1.02	2	4.2	6.5	10	0.2	7	2.5	10.5	11P070L		▲	▲
L11P.0250.1.02	2.5	4.2	6.5	10	0.2	7	2.5	10.5	11P070L		Δ	▲
L11P.0300.1.02	3	4.2	6.5	10	0.2	7	2.5	10.5	11P070L		Δ	▲
										P	●	●
										M	o	●
										K	o	●
										N	-	●
										S	-	●
										H	-	-

S11P Ø ≥ 10.5 mm

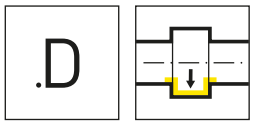

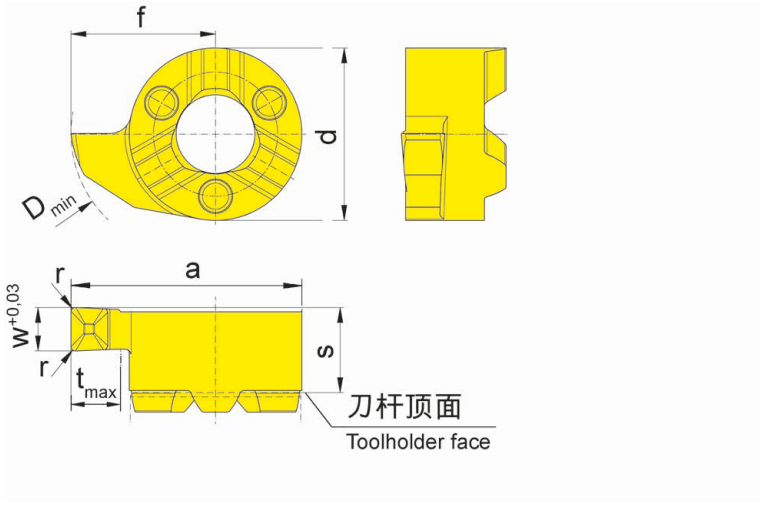

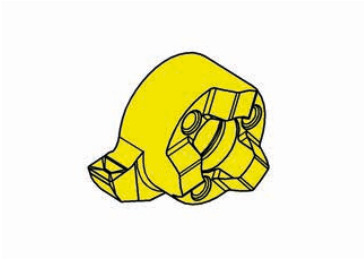

R=右手型-如图
R = right hand version shown

L=左手型
L = left hand version

▲ 库存
on stock

Δ 4周
4 weeks

产品型号 Part number	w	s	f	a	r	d	t_{max}	D_{min}	HIS	硬质合金牌号 Carbide grades EG55	TH35
RS11P.0150.1.D1	1.5	4.2	6.5	10	0.1	7	2.5	10.5	11P070R	▲	▲
RS11P.0200.1.D2	2	4.2	6.5	10	0.2	7	2.5	10.5	11P070R	▲	▲
RS11P.0250.1.D2	2.5	4.2	6.5	10	0.2	7	2.5	10.5	11P070R	▲	▲
LS11P.0150.1.D1	1.5	4.2	6.5	10	0.1	7	2.5	10.5	11P070L	Δ	▲
LS11P.0200.1.D2	2	4.2	6.5	10	0.2	7	2.5	10.5	11P070L	Δ	▲
LS11P.0250.1.D2	2.5	4.2	6.5	10	0.2	7	2.5	10.5	11P070L	Δ	Δ

	EG55	TH35
P	●	●
M	o	●
K	o	●
N	-	●
S	-	●
H	-	-

I

11P

Ø ≥ 11.5 mm

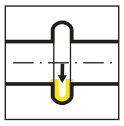

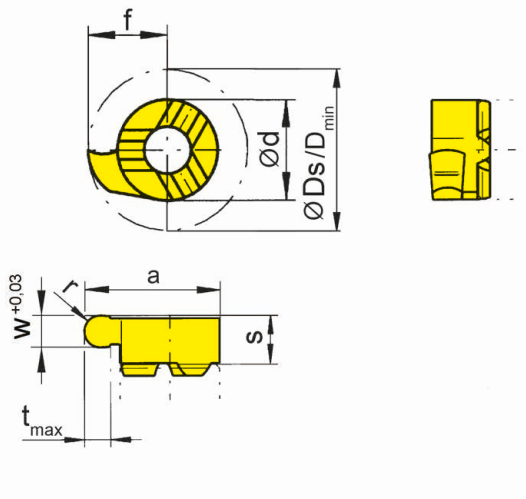

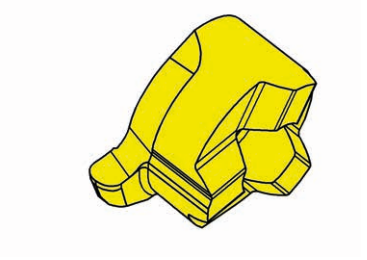

R=右手型-如图
R = right hand version shown

L=左手型
L = left hand version

硬质合金牌号
Carbide grades

▲ 库存
on stock

Δ 4周
4 weeks

产品型号 Part number	w	s	f	a	d	t_{max}	D_{min}	HIS		EG55
R11P.0005.2.10	1	4.2	7.5	11	7	3.5	11.5	11P070R		▲
R11P.0007.2.15	1.5	4.2	7.5	11	7	3.5	11.5	11P070R		▲
R11P.0009.2.18	1.8	4.2	7.5	11	7	3.5	11.5	11P070R		▲
R11P.0010.2.20	2	4.2	7.5	11	7	3.5	11.5	11P070R		▲
L11P.0005.2.10	1	4.2	7.5	11	7	3.5	11.5	11P070L		▲
L11P.0007.2.15	1.5	4.2	7.5	11	7	3.5	11.5	11P070L		▲
L11P.0009.2.18	1.8	4.2	7.5	11	7	3.5	11.5	11P070L		▲
L11P.0010.2.20	2	4.2	7.5	11	7	3.5	11.5	11P070L		▲
									P	●
									M	o
									K	o
									N	-
									S	-
									H	-

I

11P

Ø ≥ 11.5 mm

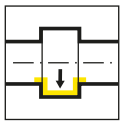

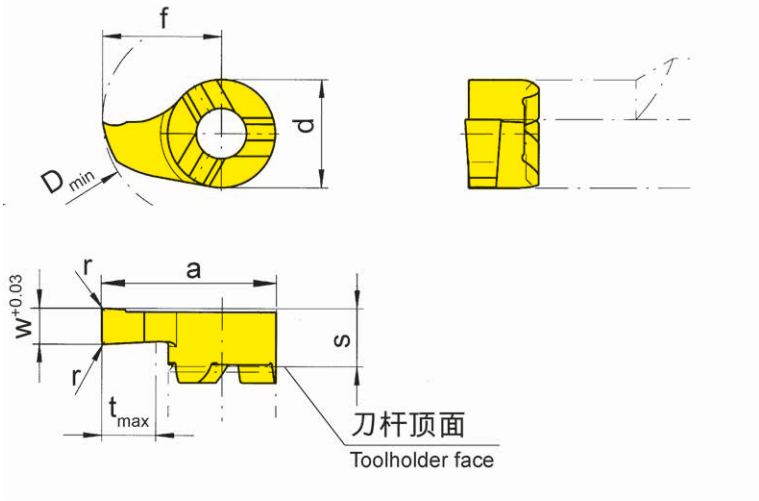

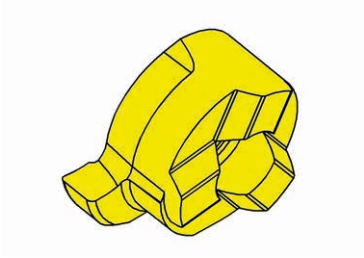

R=右手型-如图
R = right hand version shown

L=左手型
L = left hand version

▲ 库存
on stock

Δ 4周
4 weeks

硬质合金牌号
Carbide grades

产品型号 Part number	w	s	f	a	r	d	t_{max}	D_{min}	HIS		EG55	TH35
R11P.0100.2.00	1	4.2	7.5	11	-	7	3.5	11.5	11P070R		▲	▲
R11P.0150.2.00	1.5	4.2	7.5	11	-	7	3.5	11.5	11P070R		▲	▲
R11P.0200.2.02	2	4.2	7.5	11	0.2	7	3.5	11.5	11P070R		▲	▲
L11P.0100.2.00	1	4.2	7.5	11	-	7	3.5	11.5	11P070L		Δ	▲
L11P.0150.2.00	1.5	4.2	7.5	11	-	7	3.5	11.5	11P070L		Δ	▲
L11P.0200.2.02	2	4.2	7.5	11	0.2	7	3.5	11.5	11P070L		▲	▲
										P	●	●
										M	o	●
										K	o	●
										N	-	●
										S	-	●
										H	-	-

I

S11P Ø ≥ 11.5 mm

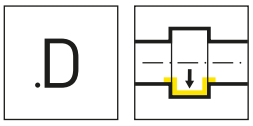

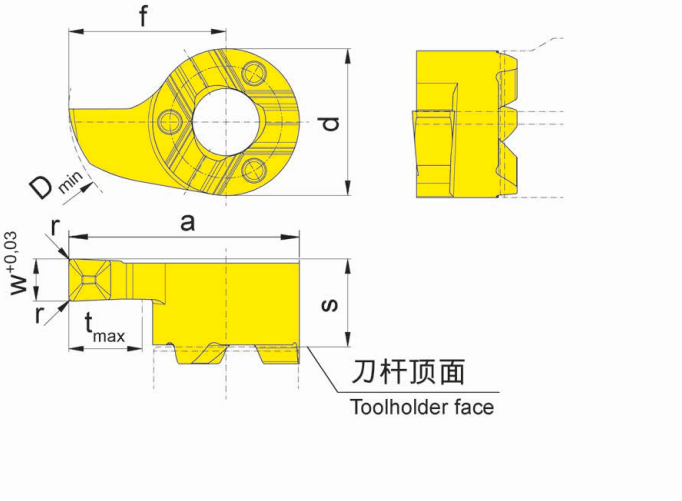

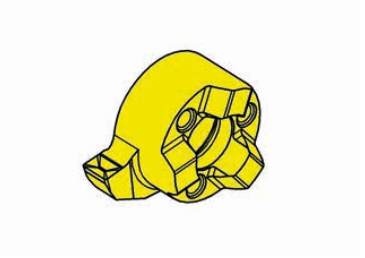

R=右手型-如图
R = right hand version shown

L=左手型
L = left hand version

▲ 库存
on stock

Δ 4周
4 weeks

产品型号 Part number	w	s	f	a	r	d	t_{max}	D_{min}	HIS		硬质合金牌号 Carbide grades EG55	TH35
RS11P.0150.2.D1	1.5	4.2	7.5	11	0.1	7	3.5	11.5	11P070R		▲	▲
RS11P.0200.2.D2	2	4.2	7.5	11	0.2	7	3.5	11.5	11P070R		▲	▲
RS11P.0250.2.D2	2.5	4.2	7.5	11	0.2	7	3.5	11.5	11P070R		▲	▲
LS11P.0150.2.D1	1.5	4.2	7.5	11	0.1	7	3.5	11.5	11P070L		Δ	▲
LS11P.0200.2.D2	2	4.2	7.5	11	0.2	7	3.5	11.5	11P070L		▲	▲
LS11P.0250.2.D2	2.5	4.2	7.5	11	0.2	7	3.5	11.5	11P070L		Δ	▲
										P	●	●
										M	o	●
										K	o	●
										N	-	●
										S	-	●
										H	-	-

I

11P

Ø ≥ 10.5 mm

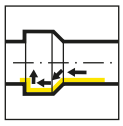

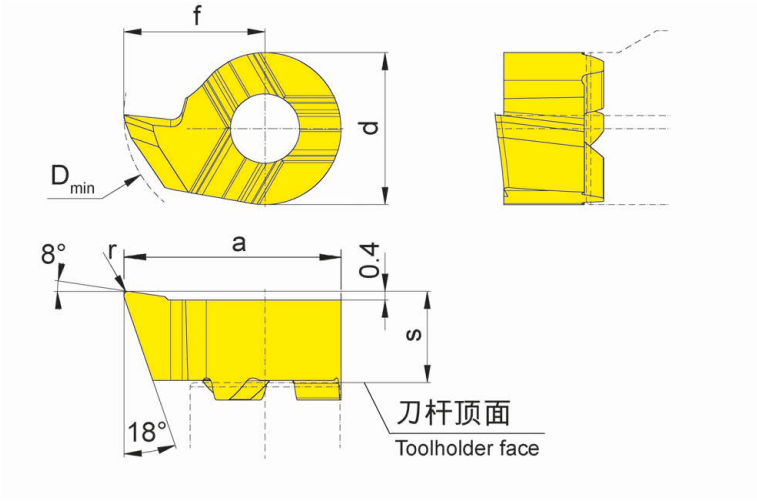

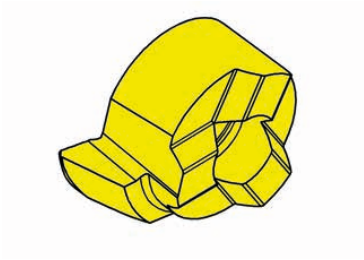

R=右手型-如图
R = right hand version shown

L=左手型
L = left hand version

▲ 库存
on stock

Δ 4周
4 weeks

产品型号 Part number	s	f	a	r	d	D_{min}	HIS	硬质合金牌号 Carbide grades EG55	TH35
R11P.1865.1.02	4.2	6.5	10	0.2	7	10.5	11P070R	▲	▲
L11P.1865.1.02	4.2	6.5	10	0.2	7	10.5	11P070L	Δ	▲

	EG55	TH35
P	●	●
M	o	●
K	o	●
N	-	●
S	-	●
H	-	-

I

S11P Ø ≥ 9.8 mm

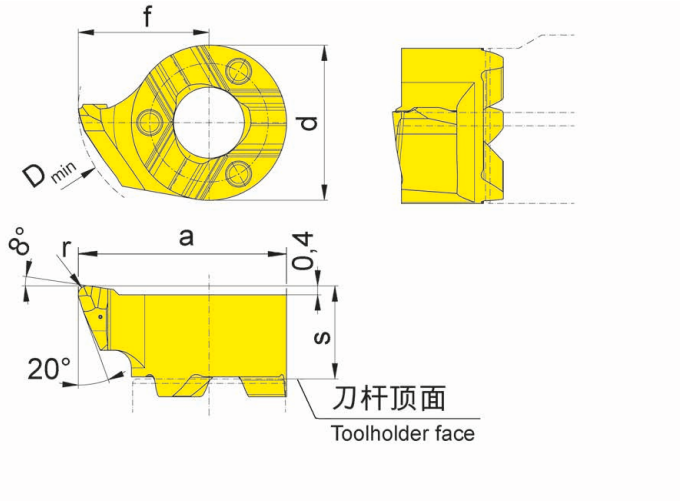

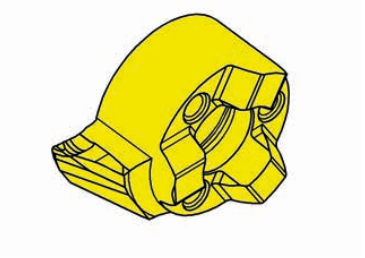

R=右手型-如图
R = right hand version shown

L=左手型
L = left hand version

▲ 库存
on stock

Δ 4周
4 weeks

硬质合金牌号
Carbide grades

产品型号 Part number	s	f	a	r	d	D_{min}	HIS	EG55	TH35
RS11P.1859.R2	4.2	5.9	9.4	0.2	7	9.8	11P070R	▲	▲
RS11P.1859.R4	4.2	5.9	9.4	0.4	7	9.8	11P070R	▲	▲
LS11P.1859.R2	4.2	5.9	9.4	0.2	7	9.8	11P070L		▲
LS11P.1859.R4	4.2	5.9	9.4	0.4	7	9.8	11P070L	▲	▲

	EG55	TH35
P	●	●
M	o	●
K	o	●
N	-	●
S	-	●
H	-	-

I

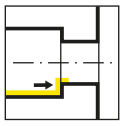

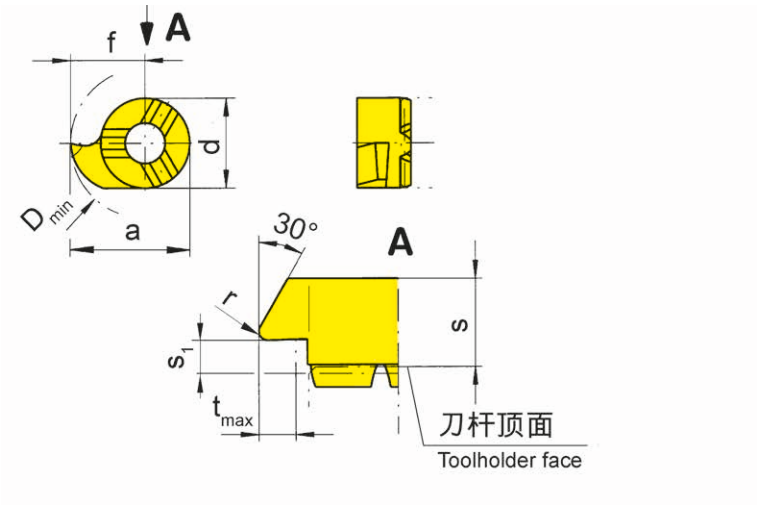

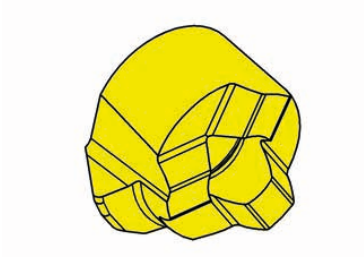

R=右手型-如图
R = right hand version shown

L=左手型
L = left hand version

硬质合金牌号
Carbide grades

▲ 库存
on stock

Δ 4周
4 weeks

产品型号 Part number	s	f	a	r	s_1	d	t_{max}	D_{min}	HIS		EG55
R11P.3075.2.02	4.35	7.5	11	0.2	1.6	7	3.5	11.5	11P070R		▲
L11P.3075.2.02	4.35	7.5	11	0.2	1.6	7	3.5	11.5	11P070L		▲
										P	●
										M	o
										K	o
										N	-
										S	-
										H	-

11P

Ø ≥ 10.5 mm

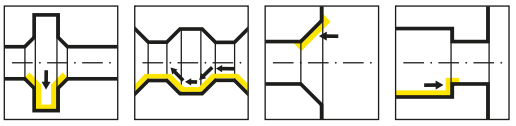

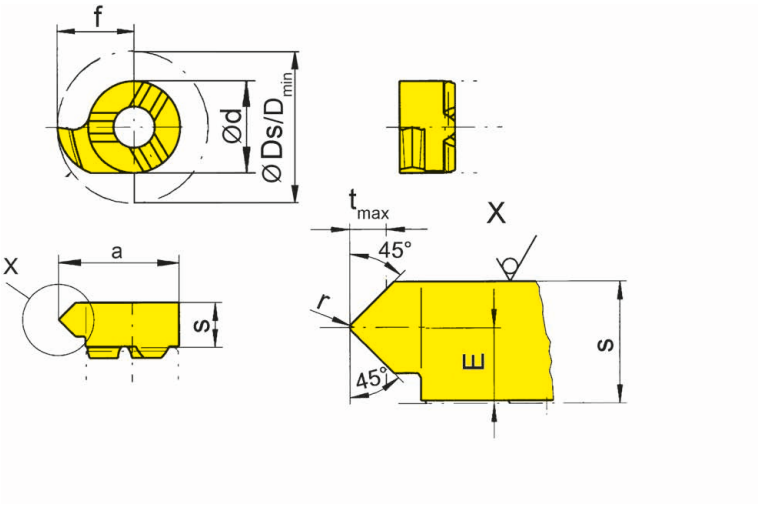

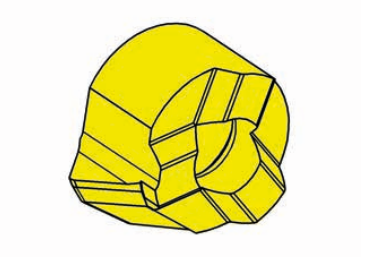

R=右手型-如图
R = right hand version shown

L=左手型
L = left hand version

硬质合金牌号
Carbide grades

▲ 库存
on stock

Δ 4周
4 weeks

产品型号 Part number	E	f	r	d	s	a	D_{min}	α	t_{max}	HIS		EG55
R11P.4545.1.02	2.2	6.5	0.2	7	4.35	10	10.5	45°	1.7	11P070R		▲
L11P.4545.1.02	2.2	6.5	0.2	7	4.35	10	10.5	45°	1.7	11P070L		▲
											P	●
											M	o
											K	o
											N	-
											S	-
											H	-

I

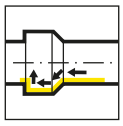

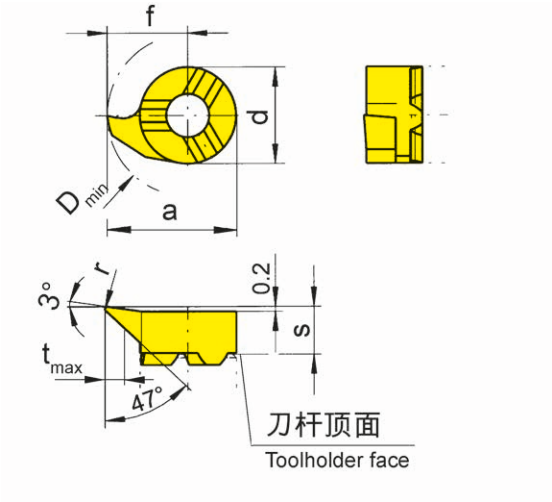

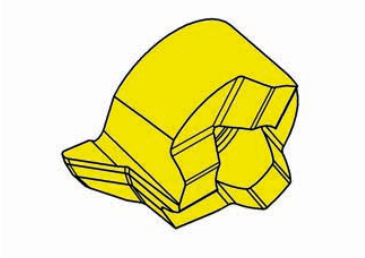

R=右手型-如图
R = right hand version shown

L=左手型
L = left hand version

▲ 库存
on stock

Δ 4周
4 weeks

硬质合金牌号
Carbide grades

产品型号 Part number	s	f	a	r	d	t_{max}	D_{min}	HIS		EG55
R11P.4775.2.02	4.2	7.5	11	0.2	7	3.5	11.5	11P070R		▲
L11P.4775.2.02	4.2	7.5	11	0.2	7	3.5	11.5	11P070L		▲
									P	●
									M	o
									K	o
									N	-
									S	-
									H	-

114

刀杆和刀片

Toolholder and Inserts

J

刀杆
Toolholder
B114/WFB.114/BA114/
HC114

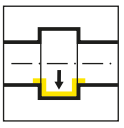

页/Page
290-292

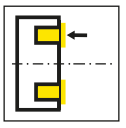

页/Page
293-294

刀片
Insert
114/S114

页/Page
295-296

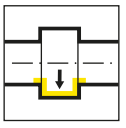

页/Page
297, 299

页/Page
298, 300

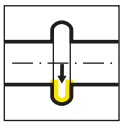

页/Page
301

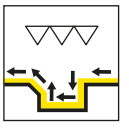

页/Page
302

页/Page
303

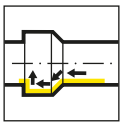

页/Page
304, 307

页/Page
305

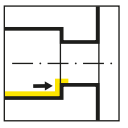

页/Page
306

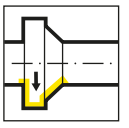

页/Page
308

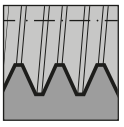

页/Page
309-313

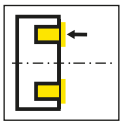

页/Page
314-317

J

孔径 Bore Ø	产品线 / Product line											
	105	109	110	106	107	108	10P	111	11P	114	116	18P
≥ 0.2	•											
≥ 0.5	•											
≥ 0.7	•											
≥ 1.0	•											
≥ 1.5	•											
≥ 2.0	•											
≥ 3.0	•											
≥ 4.0	•											
≥ 5.0	•											
≥ 6.0	•	•	•	•								
≥ 6.8		•	•	•								
≥ 7.0		•			•							
≥ 7.8			•		•	•						
≥ 8.0			•		•	•						
≥ 9.0			•		•	•						
≥ 10.0			•				•	•	•			
≥ 10.5									•			
≥ 11.0								•	•			
≥ 11.5									•			
≥ 13.8										•		
≥ 14.0										•	•	
≥ 16.0											•	
≥ 16.5										(•)		
≥ 18.0												•
槽深 Depth of groove	2.5	2.5	4.0	0.8	2.0	1.0	3.0	2.3	3.5	4.0 (6.5)	4.3	8.0
槽宽 Width of groove	0.5- 2.0	1.0- 2.0	1.0- 3.0	0.7- 1.5	1.0- 2.0	0.7- 2.0	1.0- 3.0	0.7- 3.0	1.0- 3.0	0.7- 3.0	0.7- 4.0	2.0- 3.0
加工 / Machining												
切槽 Grooving	•	•	•	•	•	•	•	•	•	•	•	•
镗孔 Boring	•	•	•	•	•	•		•		•	•	
螺纹切削 Threading	•	•			•	•		•		•	•	
倒角 Chamfering	•	•			•	•		•		•	•	
端面切槽 Face Grooving	•	•	•							•		
镗孔和仿形加工 Boring and Profiling	•											

J

B114

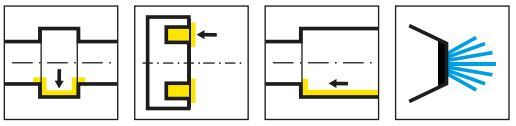

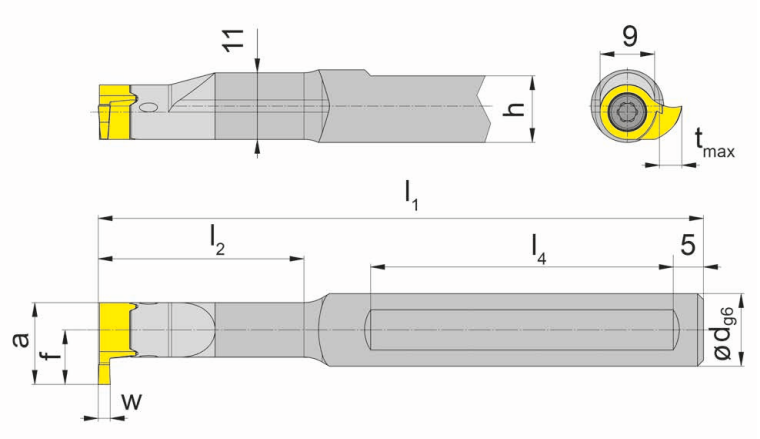

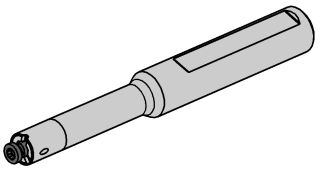

图示=右手型
Picture = right hand cutting version

产品型号 Part number	d	l_1	l_2	h	l_4	HWS
B114.0012.00	12	75	19.5	11	40	311090R • 311090L
B114.0012.01	12	100	34	11	50	311090R • 311090L
B114.0012.02	12	110	45	11	50	311090R • 311090L
B114.0012.03	12	130	64	11	50	311090R • 311090L
B114.0016.00	16	80	19.5	15	40	311090R • 311090L
B114.0016.01	16	100	34	15	50	311090R • 311090L
B114.0016.02	16	110	45	15	50	311090R • 311090L
B114.0016.03	16	130	64	15	50	311090R • 311090L

w,a,tmax和f见刀片
w, a, tmax and f see inserts

J

配件
Spare Parts

刀杆 Toolholder	锁紧螺钉 Clamping Screw	TORX PLUS®扳手 TORX PLUS® Wrench
B114...	**4.12T15EP**	**T15PQ**

B114

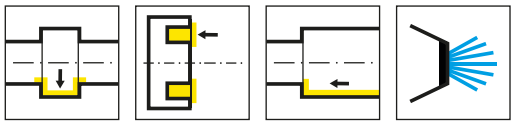

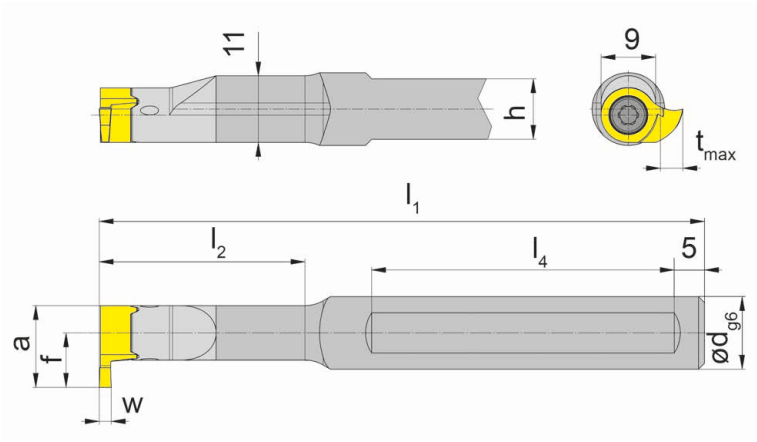

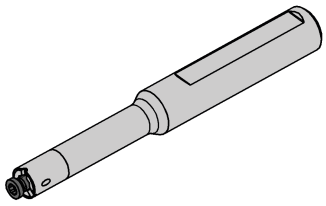

图示=右手型
Picture = right hand cutting version

产品型号 Part number	d	l_1	l_2	h	l_4	HWS
B114.0012.2.00	12	75	19.5	11	40	311090R • 311090L
B114.0012.2.01	12	100	34	11	50	311090R • 311090L
B114.0012.2.02	12	110	45	11	50	311090R • 311090L
B114.0012.2.03	12	130	64	11	50	311090R • 311090L
B114.0016.2.00	16	80	19.5	14	40	311090R • 311090L
B114.0016.2.01	16	100	34	14	50	311090R • 311090L
B114.0016.2.02	16	110	45	14	50	311090R • 311090L
B114.0016.2.03	16	130	64	14	50	311090R • 311090L

w,a,tmax和f见刀片
w, a, tmax and f see inserts

J

配件
Spare Parts

刀杆 Toolholder	锁紧螺钉 Clamping Screw	TORX PLUS®扳手 TORX PLUS® Wrench
B114...	**4.12T15EP**	**T15PQ**

WFB.114

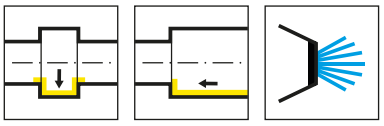

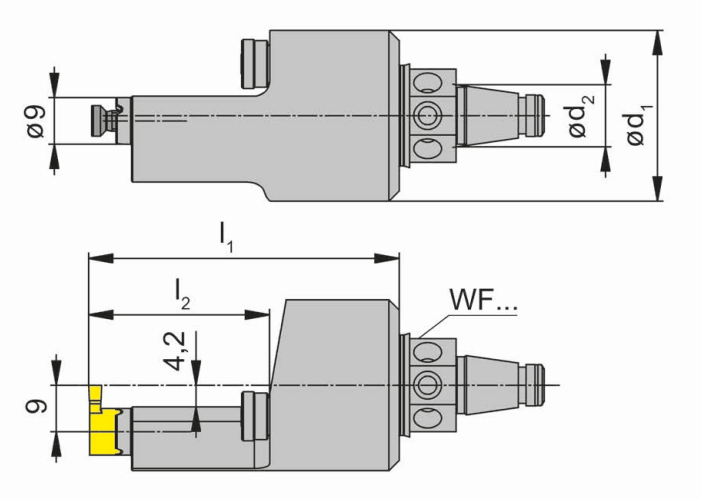

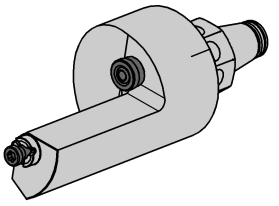

产品型号 Part number	d_1	l_1	d_2	l_2	HWS	HMS
WFB.2HO.114	33	60	12	35	311090R • 311090L	WFB
WFB.3HO.114	50	80	20	32	311090R • 311090L	WFB

J

配件
Spare Parts

刀杆 Toolholder	锁紧螺钉 Clamping Screw	冷却液碰嘴 Coolant spray nozzle	TORX PLUS®扳手 TORX PLUS® Wrench
WFB.2HO.114	**4.12T15EP**	**020.0806.3116**	**T15PQ**
WFB.3HO.114			

BA114

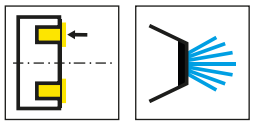

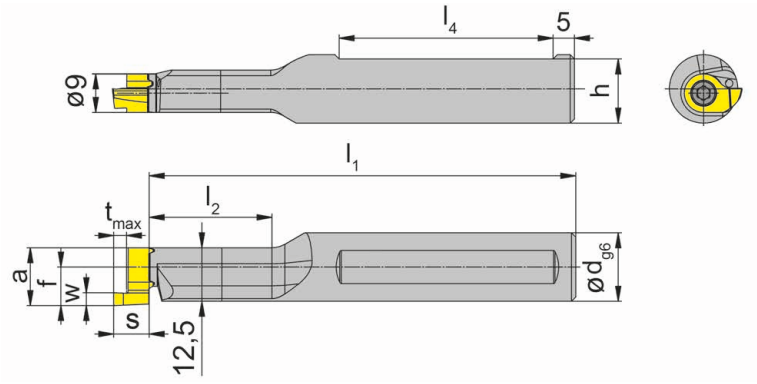

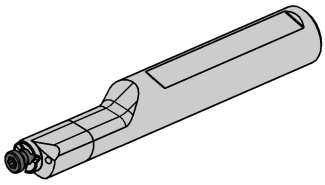

图示=右手型
Picture = right hand cutting version

产品型号 Part number	d	l_1	l_2	h	l_4	HWS
RBA114.0016.01	16	99.7	28.7	15	50	311090R • 311090L
RBA114.0016.02	16	109.7	39.7	15	50	311090R • 311090L
LBA114.0016.01	16	99.7	28.7	15	50	311090R • 311090L
LBA114.0016.02	16	109.7	39.7	15	50	311090R • 311090L

w,a,s,tmax和f见刀片
w, a, s, tmax and f see inserts

J

配件
Spare Parts

刀杆 Toolholder	锁紧螺钉 Clamping Screw	TORX PLUS®扳手 TORX PLUS® Wrench
R/LBA114...	**4.12T15EP**	**T15PQ**

HC114

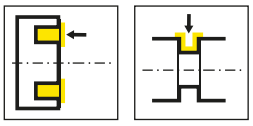

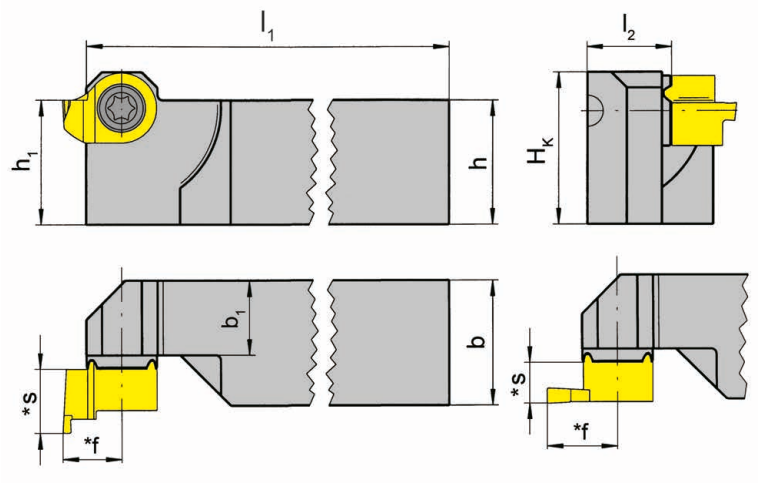

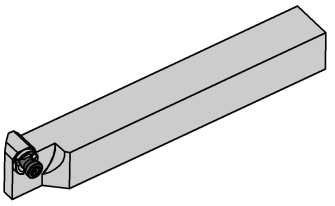

R=右手型-如图
R = right hand version shown

L=左手型
L = left hand version

产品型号 Part number	h	b	l_1	l_2	h_1	b_1	H_K	HWS
RHC114.1212.01	12	12	122	11.2	12	9.5	15.6	311090R • 311090L
RHC114.1616.01	16	16	122	11.2	16	9.5	19.6	311090R • 311090L
RHC114.2020.01	20	20	122	15.2	20	13.5	23.6	311090R • 311090L
RHC114.2525.01	25	25	147	20.2	25	18.5	28.6	311090R • 311090L
LHC114.1212.01	12	12	122	11.2	12	9.5	15.6	311090R • 311090L
LHC114.1616.01	16	16	122	11.2	16	9.5	19.6	311090R • 311090L
LHC114.2020.01	20	20	122	15.2	20	13.5	23.6	311090R • 311090L
LHC114.2525.01	25	25	147	20.2	25	18.5	28.6	311090R • 311090L

*见刀片
* see inserts

J

配件
Spare Parts

刀杆 Toolholder	锁紧螺钉 Clamping Screw	TORX PLUS®扳手 TORX PLUS® Wrench
R/LHC114...	**4.12T15EP**	**T15PQ**

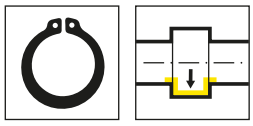

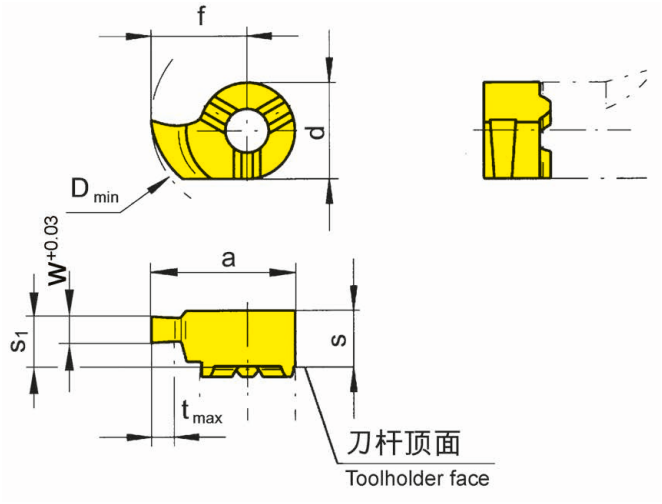

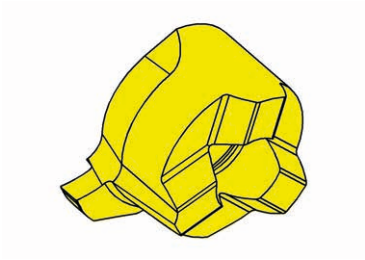

R=右手型-如图
R = right hand version shown

L=左手型
L = left hand version

▲ 库存
on stock

Δ 4周
4 weeks

硬质合金牌号
Carbide grades

产品型号 Part number	w	Nw	s	f	a	s_1	d	t_{max}	D_{min}	HIS		EG55	TN35
R114.0070.00	0.74	0.7	5.5	9	13.5	5.3	9	1.2	14	311090R		▲	▲
R114.0080.00	0.84	0.8	5.5	9	13.5	5.3	9	1.3	14	311090R		▲	▲
R114.0090.00	0.94	0.9	5.5	9	13.5	5.3	9	1.5	14	311090R		▲	▲
L114.0070.00	0.74	0.7	5.5	9	13.5	5.3	9	1.2	14	311090L			▲
L114.0080.00	0.84	0.8	5.5	9	13.5	5.3	9	1.3	14	311090L		Δ	▲
L114.0090.00	0.94	0.9	5.5	9	13.5	5.3	9	1.5	14	311090L		▲	▲
											P	●	●
											M	o	●
											K	o	●
											N	-	●
											S	-	●
											H	-	-

切削深度受限
not face cutting, limited depth of cut

J

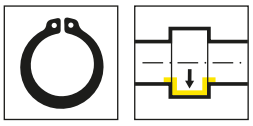

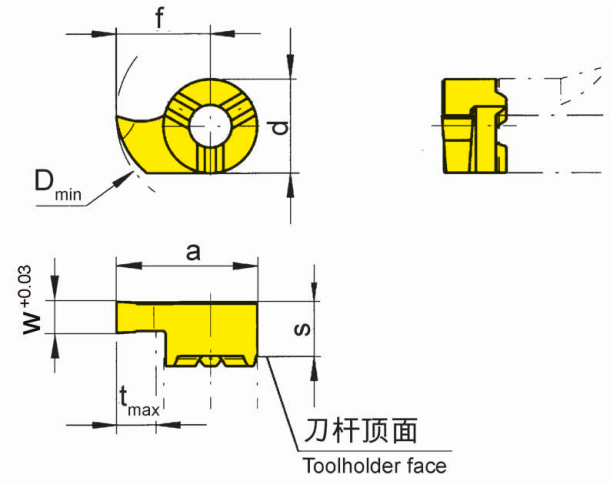

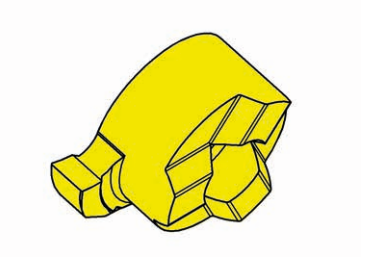

R=右手型-如图
R = right hand version shown

L=左手型
L = left hand version

▲ 库存
on stock

Δ 4周
4 weeks

硬质合金牌号
Carbide grades

产品型号 Part number	w	Nw	s	f	a	d	t_{max}	D_{min}	HIS	EG55	TH35	TN35
R114.0110.00	1.19	1.1	5.3	9	13.5	9	4	14	311090R	▲	▲	▲
R114.0130.00	1.39	1.3	5.3	9	13.5	9	4	14	311090R	▲	▲	▲
R114.0160.00	1.69	1.6	5.3	9	13.5	9	4	14	311090R	▲	▲	▲
L114.0110.00	1.19	1.1	5.3	9	13.5	9	4	14	311090L	▲	▲	▲
L114.0130.00	1.39	1.3	5.3	9	13.5	9	4	14	311090L	▲	▲	▲
L114.0160.00	1.69	1.6	5.3	9	13.5	9	4	14	311090L		▲	▲

	EG55	TH35	TN35
P	●	●	●
M	o	●	●
K	o	●	●
N	-	●	●
S	-	●	●
H	-	-	-

J

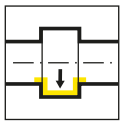

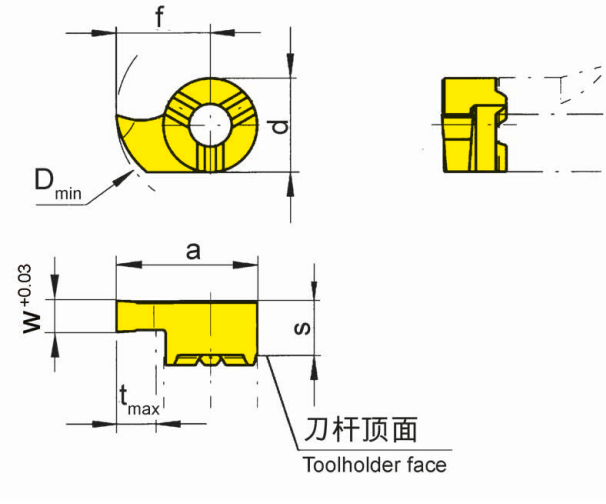

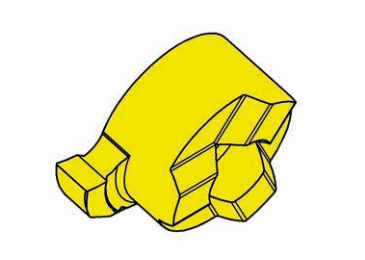

R=右手型-如图
R = right hand version shown

L=左手型
L = left hand version

▲ 库存
on stock

Δ 4周
4 weeks

硬质合金牌号
Carbide grades

产品型号 Part number	w	s	f	a	d	t_{max}	D_{min}	HIS	MG12	EG55	TH35	TN35
R114.0150.00	1.5	5.3	9	13.5	9	4	14	311090R	▲	▲	▲	▲
R114.0200.00	2	5.3	9	13.5	9	4	14	311090R	▲	▲	▲	▲
R114.0250.00	2.5	5.3	9	13.5	9	4	14	311090R	▲	▲	▲	▲
R114.0300.00	3	5.3	9	13.5	9	4	14	311090R	▲	▲	▲	▲
L114.0150.00	1.5	5.3	9	13.5	9	4	14	311090L	▲	▲	▲	▲
L114.0200.00	2	5.3	9	13.5	9	4	14	311090L	▲	▲	▲	▲
L114.0250.00	2.5	5.3	9	13.5	9	4	14	311090L	▲	▲	▲	▲
L114.0300.00	3	5.3	9	13.5	9	4	14	311090L	▲	▲	▲	▲

	MG12	EG55	TH35	TN35
P	o	●	●	●
M	-	o	●	●
K	-	o	●	●
N	-	-	●	●
S	-	-	●	●
H	-	-	-	-

J

S114 Ø ≥ 14 mm

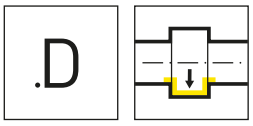

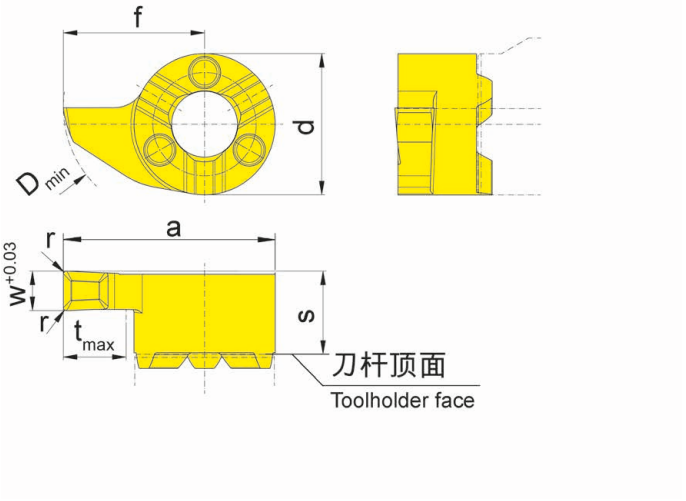

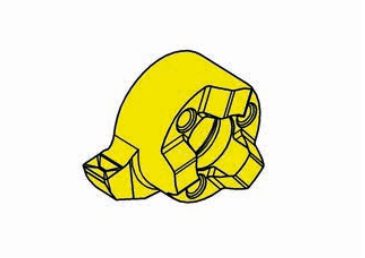

R=右手型-如图
R = right hand version shown

L=左手型
L = left hand version

▲ 库存
on stock

Δ 4周
4 weeks

硬质合金牌号
Carbide grades

产品型号 Part number	w	s	f	a	r	d	t_{max}	D_{min}	HIS		EG55	TF45	TH35	TN35
RS114.0200.D2	2	5.3	9	13.5	0.2	9	4	14	311090R		▲	▲	▲	▲
RS114.0250.D2	2.5	5.3	9	13.5	0.2	9	4	14	311090R		▲	▲	▲	▲
RS114.0300.D2	3	5.3	9	13.5	0.2	9	4	14	311090R		▲	▲	▲	▲
LS114.0200.D2	2	5.3	9	13.5	0.2	9	4	14	311090L		▲	Δ	▲	▲
LS114.0250.D2	2.5	5.3	9	13.5	0.2	9	4	14	311090L		▲	Δ	▲	▲
LS114.0300.D2	3	5.3	9	13.5	0.2	9	4	14	311090L		▲	▲	▲	▲
										P	●	●	●	●
										M	o	●	●	●
										K	o	●	●	●
										N	-	●	●	●
										S	-	●	●	●
										H	-	-	-	-

J

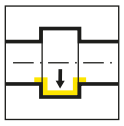

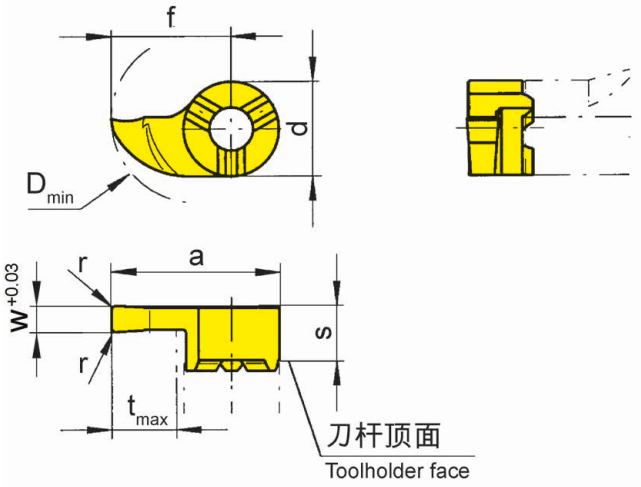

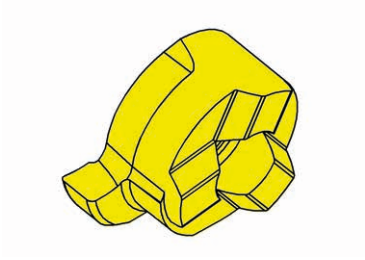

R=右手型-如图
R = right hand version shown

L=左手型
L = left hand version

▲ 库存
on stock

Δ 4周
4 weeks

硬质合金牌号
Carbide grades

产品型号 Part number	w	s	f	a	r	d	t_{max}	D_{min}	HIS		EG55	TH35	TI25	TN35
R114.0150.1.02	1.5	5.3	11.3	15.8	0.2	9	6.5	16.5	311090R		▲	▲		▲
R114.0200.1.02	2	5.3	11.3	15.8	0.2	9	6.5	16.5	311090R		▲	▲	▲	▲
R114.0250.1.02	2.5	5.3	11.3	15.8	0.2	9	6.5	16.5	311090R		▲	▲		▲
R114.0300.1.02	3	5.3	11.3	15.8	0.2	9	6.5	16.5	311090R		▲	▲		▲
L114.0150.1.02	1.5	5.3	11.3	15.8	0.2	9	6.5	16.5	311090L		▲	▲		▲
L114.0200.1.02	2	5.3	11.3	15.8	0.2	9	6.5	16.5	311090L		▲	▲	Δ	▲
L114.0250.1.02	2.5	5.3	11.3	15.8	0.2	9	6.5	16.5	311090L		▲	▲		▲
L114.0300.1.02	3	5.3	11.3	15.8	0.2	9	6.5	16.5	311090L		▲	▲		▲
										P	●	●	●	●
										M	o	●	●	●
										K	o	●	●	●
										N	-	●	●	●
										S	-	●	●	●
										H	-	-	-	-

J

S114 Ø ≥ 16.5 mm

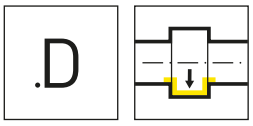

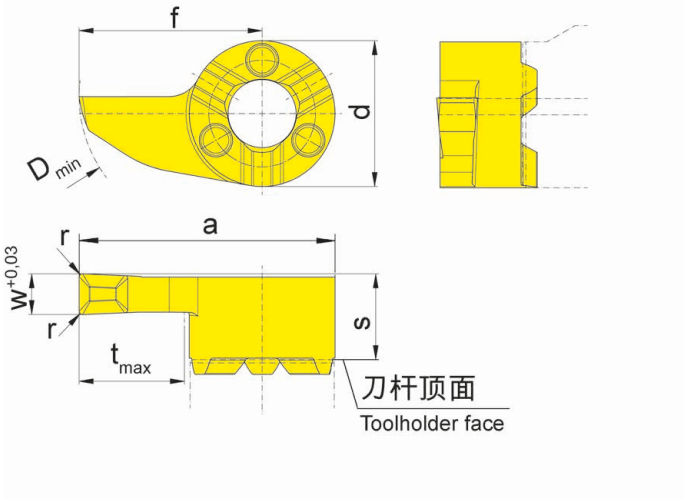

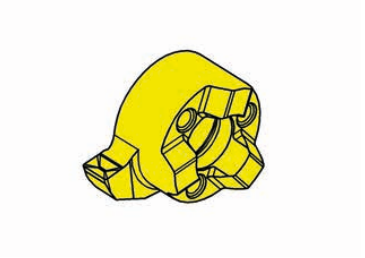

R=右手型-如图
R = right hand version shown

L=左手型
L = left hand version

▲ 库存
on stock

Δ 4周
4 weeks

硬质合金牌号
Carbide grades

产品型号 Part number	w	s	f	a	r	d	t_{max}	D_{min}	HIS		EG55	TH35
RS114.0200.1.D2	2	5.3	11.3	15.8	0.2	9	6.5	16.5	311090R		▲	▲
RS114.0250.1.D2	2.5	5.3	11.3	15.8	0.2	9	6.5	16.5	311090R		▲	▲
RS114.0300.1.D2	3	5.3	11.3	15.8	0.2	9	6.5	16.5	311090R		▲	▲
LS114.0200.1.D2	2	5.3	11.3	15.8	0.2	9	6.5	16.5	311090L		▲	▲
LS114.0250.1.D2	2.5	5.3	11.3	15.8	0.2	9	6.5	16.5	311090L		Δ	▲
LS114.0300.1.D2	3	5.3	11.3	15.8	0.2	9	6.5	16.5	311090L		▲	▲
										P	●	●
										M	o	●
										K	o	●
										N	-	●
										S	-	●
										H	-	-

J

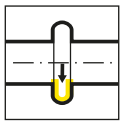

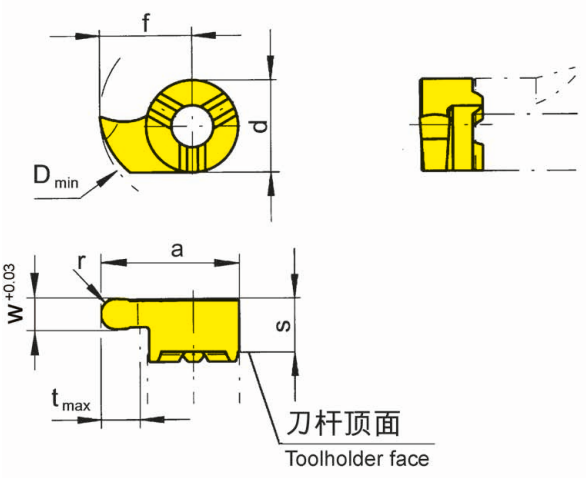

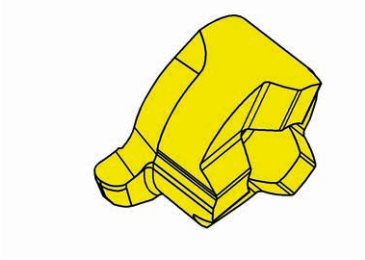

R=右手型-如图
R = right hand version shown

L=左手型
L = left hand version

▲ 库存
on stock

Δ 4周
4 weeks

硬质合金牌号
Carbide grades

产品型号 Part number	w	s	f	a	r	d	t_{max}	D_{min}	HIS	EG55	TH35	TI25	TN35
R114.0004.08	0.8	5.3	9	13.5	0.4	9	4	14	311090R			▲	
R114.0006.12	1.2	5.3	9	13.5	0.6	9	4	14	311090R	▲	▲		▲
R114.0009.18	1.8	5.3	9	13.5	0.9	9	4	14	311090R	▲	▲		▲
R114.0010.20	2	5.3	9	13.5	1	9	4	14	311090R	▲	▲		▲
R114.0011.22	2.2	5.3	9	13.5	1.1	9	4	14	311090R	▲	▲		▲
R114.0015.30	3	5.3	9	13.5	1.5	9	4	14	311090R	▲	▲		▲
R114.0020.40	4	5.3	9	13.5	2	9	4	14	311090R	▲	▲		
L114.0004.08	0.8	5.3	9	13.5	0.4	9	4	14	311090L			▲	
L114.0006.12	1.2	5.3	9	13.5	0.6	9	4	14	311090L	▲	▲		▲
L114.0009.18	1.8	5.3	9	13.5	0.9	9	4	14	311090L	▲	▲		▲
L114.0010.20	2	5.3	9	13.5	1	9	4	14	311090L	▲	▲		▲
L114.0011.22	2.2	5.3	9	13.5	1.1	9	4	14	311090L	Δ	▲		▲
L114.0015.30	3	5.3	9	13.5	1.5	9	4	14	311090L	▲	▲		▲
L114.0020.40	4	5.3	9	13.5	2	9	4	14	311090L	Δ	Δ		

	EG55	TH35	TI25	TN35
P	●	●	●	●
M	o	●	●	●
K	o	●	●	●
N	-	●	●	●
S	-	●	●	●
H	-	-	-	-

J

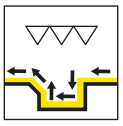

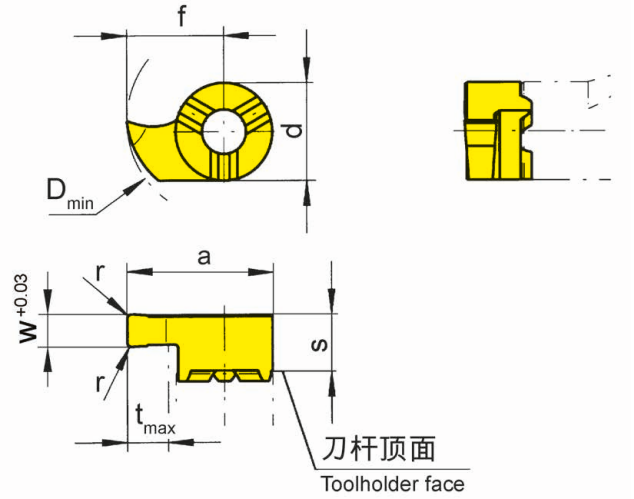

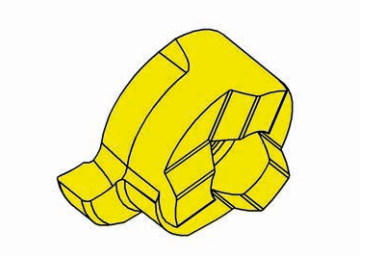

R=右手型-如图
R = right hand version shown

L=左手型
L = left hand version

硬质合金牌号
Carbide grades

▲ 库存
on stock

Δ 4周
4 weeks

产品型号 Part number	w	s	f	a	r	d	t_{max}	D_{min}	HIS		MG12	EG55	TH35	TI25	TN35
R114.0200.02	2	5.3	9	13.5	0.2	9	4	14	311090R		▲	▲	▲	▲	▲
L114.0200.02	2	5.3	9	13.5	0.2	9	4	14	311090L		▲	▲	▲	▲	▲
										P	o	●	●	●	●
										M	-	o	●	●	●
										K	-	o	●	●	●
										N	-	-	●	●	●
										S	-	-	●	●	●
										H	-	-	-	-	-

J

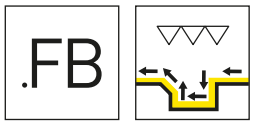

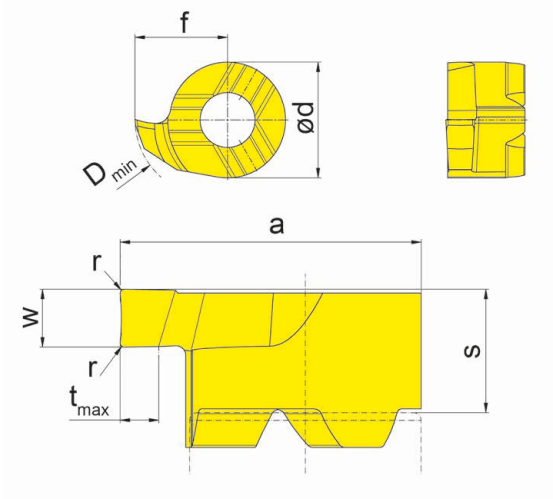

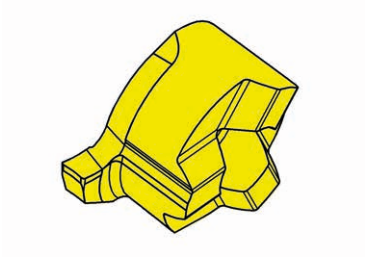

R=右手型-如图
R = right hand version shown

L=左手型
L = left hand version

硬质合金牌号
Carbide grades

▲ 库存
on stock

Δ 4周
4 weeks

产品型号 Part number	w	s	f	a	r	d	t_{max}	D_{min}	HIS		EG35
R114.FB10.01	1	5.3	9	13.5	0.1	9	4	14	311090R		▲
R114.FB15.01	1.5	5.3	9	13.5	0.1	9	4	14	311090R		▲
L114.FB10.01	1	5.3	9	13.5	0.1	9	4	14	311090L		▲
L114.FB15.01	1.5	5.3	9	13.5	0.1	9	4	14	311090L		▲
										P	●
										M	●
										K	o
										N	-
										S	-
										H	-

计算槽的最小可加工宽度 w_x
Calculation of the smallest possible width of groove w_x

例如 R114.FB10.01
Example

w_x = 2 x 槽宽 w - 2 x 刀尖圆角 R

w_x = 2 x Width of insert w - 2 x Corner radius insert R

w_x = 2 x 1 mm - 2 x 0.1 mm

w_x = 1.8 mm

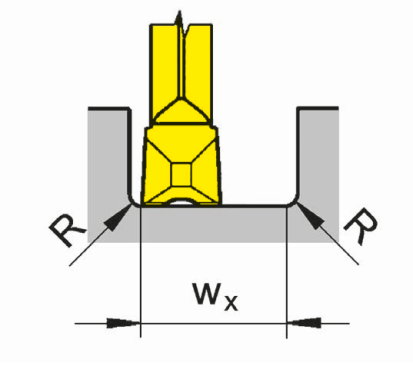

加工路径
Processing flow

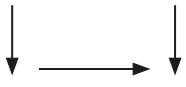

J

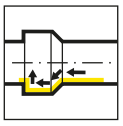

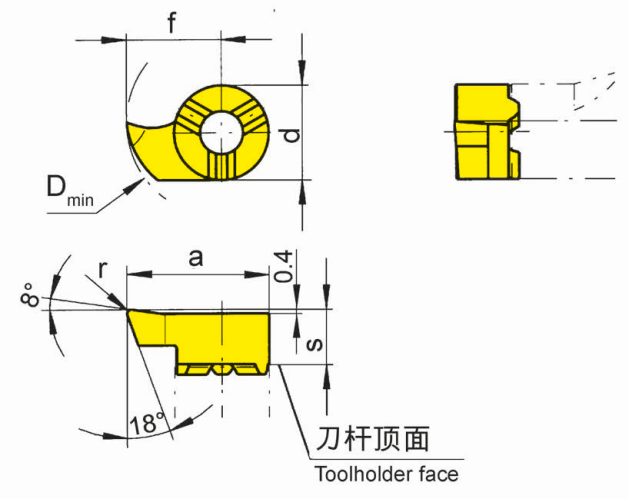

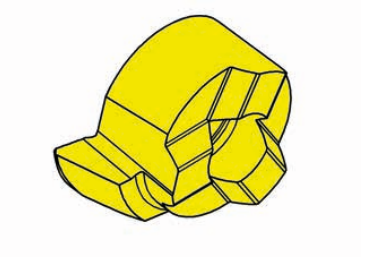

R=右手型-如图
R = right hand version shown

L=左手型
L = left hand version

硬质合金牌号
Carbide grades

▲ 库存
on stock

Δ 4周
4 weeks

产品型号 Part number	s	f	a	r	d	D_{min}	HIS	MG12	EG55	TH35	TI25	TN35
R114.1890.02	5.3	8.7	13.2	0.2	9	13.8	311090R	▲	▲	▲	Δ	▲
L114.1890.02	5.3	8.7	13.2	0.2	9	13.8	311090L	▲	▲	▲	Δ	▲
								P o	●	●	●	●
								M -	o	●	●	●
								K -	o	●	●	●
								N -	-	●	●	●
								S -	-	●	●	●
								H -	-	-	-	-

J

S114 Ø ≥ 13.8 mm

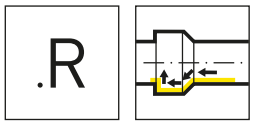

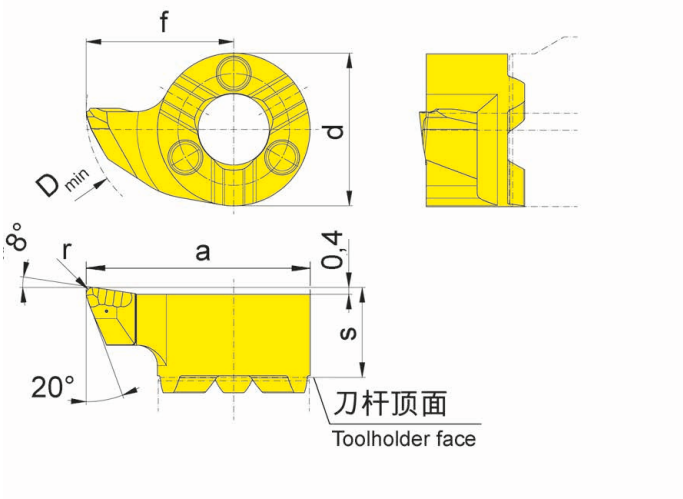

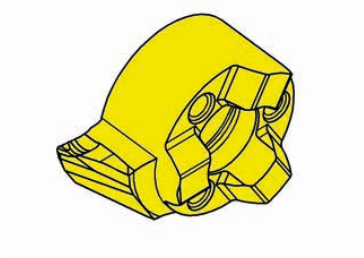

R=右手型-如图
R = right hand version shown

L=左手型
L = left hand version

▲ 库存
on stock

Δ 4周
4 weeks

产品型号 Part number	s	f	a	r	d	D_{min}	HIS	硬质合金牌号 Carbide grades EG55	TH35
RS114.1890.R2	5.3	8.7	13.2	0.2	9	13.8	311090R	▲	▲
RS114.1890.R4	5.3	8.7	13.2	0.4	9	13.8	311090R	▲	▲
LS114.1890.R2	5.3	8.7	13.2	0.2	9	13.8	311090L	▲	▲
LS114.1890.R4	5.3	8.7	13.2	0.4	9	13.8	311090L	▲	▲

	EG55	TH35
P	●	●
M	o	●
K	o	●
N	-	●
S	-	●
H	-	-

J

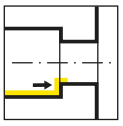

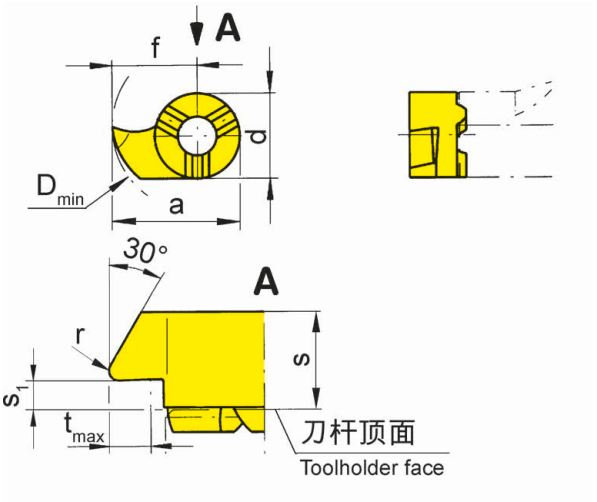

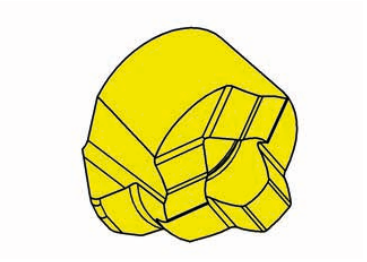

R=右手型-如图
R = right hand version shown

L=左手型
L = left hand version

▲ 库存
on stock

Δ 4周
4 weeks

产品型号 Part number	s	f	r	s_1	d	t_{max}	D_{min}	HIS		硬质合金牌号 Carbide grades EG55	TH35	TN35
R114.3090.02	5.5	8.7	0.2	2.4	9	3.5	13.8	311090R		▲	▲	▲
L114.3090.02	5.5	8.7	0.2	2.4	9	3.5	13.8	311090L		▲	▲	▲
									P	●	●	●
									M	o	●	●
									K	o	●	●
									N	-	●	●
									S	-	●	●
									H	-	-	-

J

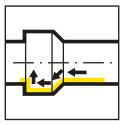

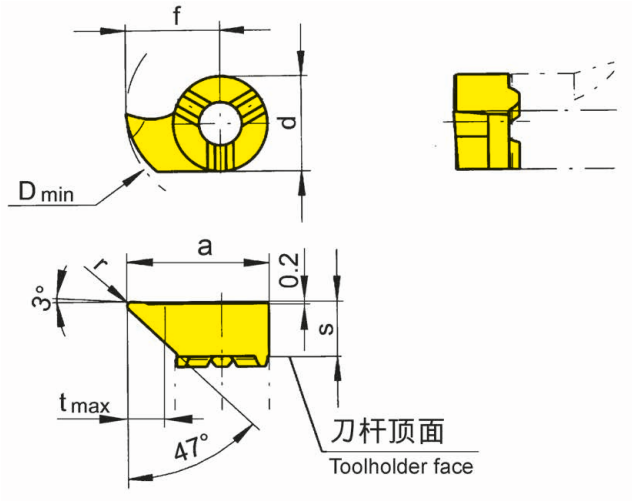

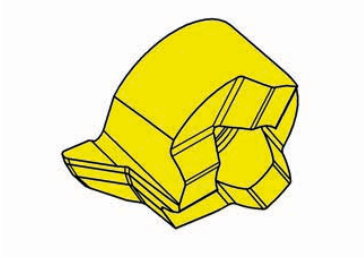

R=右手型-如图
R = right hand version shown

L=左手型
L = left hand version

▲ 库存
on stock

Δ 4周
4 weeks

硬质合金牌号
Carbide grades

产品型号 Part number	s	f	a	r	d	t_{max}	D_{min}	HIS		EG55	TH35	TI25	TN35
R114.4787.02	5.3	8.7	13.2	0.2	9	3	13.8	311090R		▲	▲	Δ	▲
R114.4787.04	5.3	8.7	13.2	0.4	9	3	13.8	311090R		▲	▲		
R114.4710.02	5.3	11	15.5	0.2	9	5	16	311090R		▲	▲		▲
L114.4787.02	5.3	8.7	13.2	0.2	9	3	13.8	311090L		▲	▲		▲
L114.4787.04	5.3	8.7	13.2	0.4	9	3	13.8	311090L		▲	▲		
L114.4710.02	5.3	11	15.5	0.2	9	5	16	311090L		Δ	▲		▲
									P	●	●	●	●
									M	o	●	●	●
									K	o	●	●	●
									N	-	●	●	●
									S	-	●	●	●
									H	-	-	-	-

J

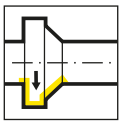

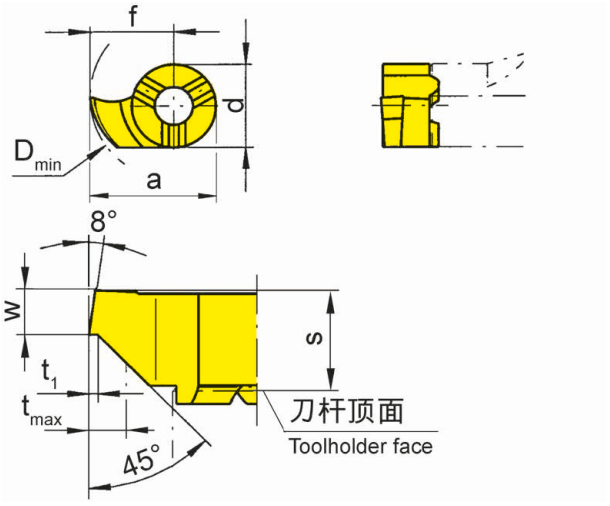

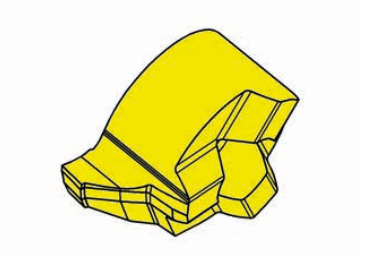

R=右手型-如图
R = right hand version shown

L=左手型
L = left hand version

▲ 库存
on stock

Δ 4周
4 weeks

硬质合金牌号
Carbide grades

产品型号 Part number	w	s	f	a	d	t_{max}	t_1	D_{min}	HIS		MG12	EG55	TI25	TN35
R114.0815.45	1.5	5.3	9	13.5	9	1.5	0.2	14	311090R		▲	▲	▲	Δ
L114.0815.45	1.5	5.3	9	13.5	9	1.5	0.2	14	311090L		Δ	▲	▲	
										P	o	●	●	●
										M	-	o	●	●
										K	-	o	●	●
										N	-	-	●	●
										S	-	-	●	●
										H	-	-	-	-

J

114

Ø ≥ 14 mm

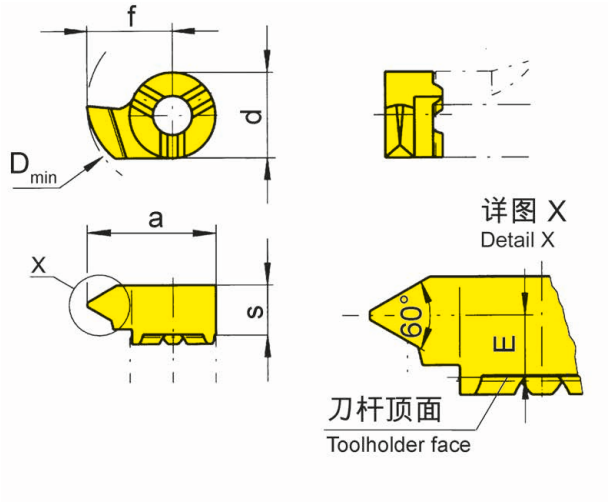

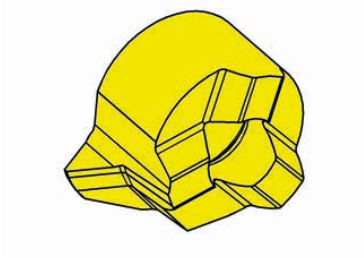

R=右手型-如图
R = right hand version shown

L=左手型
L = left hand version

▲ 库存
on stock

硬质合金牌号
Carbide grades

Δ 4周
4 weeks

产品型号 Part number	P	P_{max}	E	f	a	d	s	D_{min}	HIS		EG55	TH35	TN35
R114.0205.01	0.5	0.75	4.8	9	9	9	5.5	14	311090R		▲	▲	▲
R114.1020.01	2		4.2	9	13.5	9	5.5	14	311090R		▲	▲	▲
R114.0510.01	1	1.25	4.7	9	13.5	9	5.5	14	311090R		▲	▲	▲
R114.1325.01	2.5		4.2	9	13.5	9	5.5	14	311090R		▲	▲	▲
R114.0815.01	1.5	1.75	4.5	9	13.5	9	5.5	14	311090R		▲	▲	▲
L114.0205.01	0.5	0.75	4.8	9	9	9	5.5	14	311090L		Δ	Δ	Δ
L114.1020.01	2		4.2	9	13.5	9	5.5	14	311090L		Δ	Δ	Δ
L114.0510.01	1	1.25	4.7	9	13.5	9	5.5	14	311090L		Δ	Δ	▲
L114.1325.01	2.5		4.2	9	13.5	9	5.5	14	311090L		Δ	▲	Δ
L114.0815.01	1.5	1.75	4.5	9	13.5	9	5.5	14	311090L		▲	▲	▲
										P	●	●	●
										M	o	●	●
										K	o	●	●
										N	-	●	●
										S	-	●	●
										H	-	-	-

J

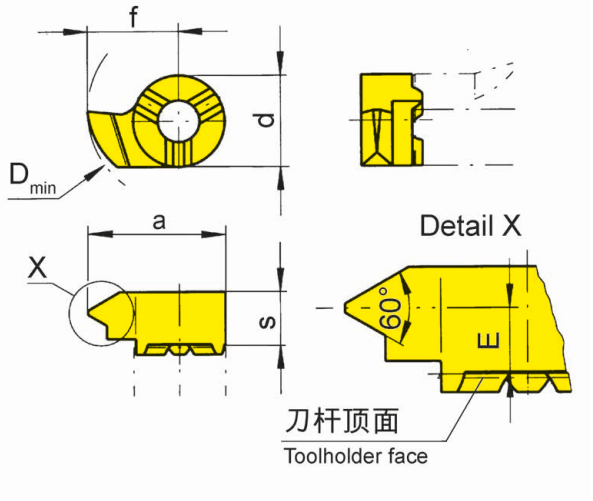

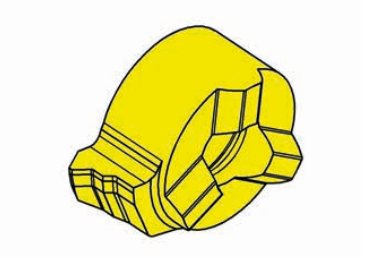

R=右手型-如图
R = right hand version shown

L=左手型
L = left hand version

▲ 库存
on stock

Δ 4周
4 weeks

硬质合金牌号
Carbide grades

产品型号 Part number	P	E	f	a	d	s	D_{min}	HIS		EG55	TN35
R114.0510.02	1	4.7	9	13.5	9	5.5	14	311090R		▲	▲
R114.0815.02	1.5	4.5	9	13.5	9	5.5	14	311090R		▲	▲
R114.1020.02	2	4.2	9	13.5	9	5.5	14	311090R		▲	▲
R114.1325.02	2.5	4.2	9	13.5	9	5.5	14	311090R		▲	▲
L114.0510.02	1	4.7	9	13.5	9	5.5	14	311090L		Δ	▲
L114.0815.02	1.5	4.5	9	13.5	9	5.5	14	311090L		Δ	▲
L114.1020.02	2	4.2	9	13.5	9	5.5	14	311090L		Δ	▲
L114.1325.02	2.5	4.2	9	13.5	9	5.5	14	311090L		Δ	▲
									P	●	●
									M	o	●
									K	o	●
									N	-	●
									S	-	●
									H	-	-

J

S114 Ø ≥ 14 mm

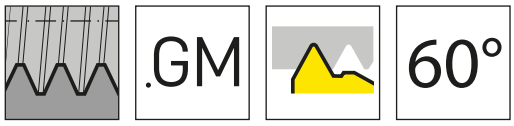

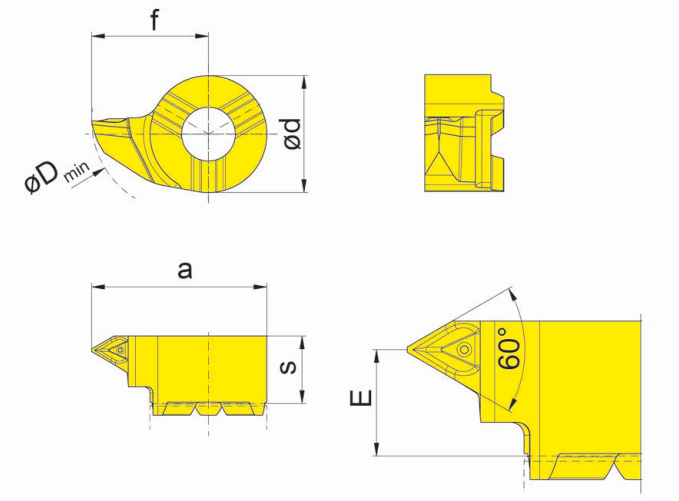

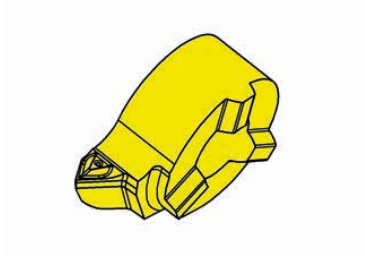

R=右手型-如图
R = right hand version shown

L=左手型
L = left hand version

硬质合金牌号
Carbide grades

▲ 库存
on stock

Δ 4周
4 weeks

产品型号 Part number	P	P_{max}	E	f	a	d	s	D_{min}	HIS		EG55
RS114.0205.GM1	0.5	0.75	4.1	9	13.5	9	5.2	14	311090R		▲
RS114.0510.GM1	1	1.25	4.1	9	13.5	9	5.2	14	311090R		▲
RS114.0815.GM1	1.5	1.75	4.1	9	13.5	9	5.2	14	311090R		▲
RS114.1020.GM1	2	2	4.1	9	13.5	9	5.2	14	311090R		▲
RS114.1325.GM1	2.5	2.5	4.1	9	13.5	9	5.2	14	311090R		▲
LS114.0205.GM1	0.5	0.75	4.1	9	13.5	9	5.2	14	311090L		▲
LS114.0510.GM1	1	1.25	4.1	9	13.5	9	5.2	14	311090L		▲
LS114.0815.GM1	1.5	1.75	4.1	9	13.5	9	5.2	14	311090L		▲
LS114.1020.GM1	2	2	4.1	9	13.5	9	5.2	14	311090L		▲
LS114.1325.GM1	2.5	2.5	4.1	9	13.5	9	5.2	14	311090L		▲

P	●
M	o
K	o
N	-
S	-
H	-

J

S114 Ø ≥ 14 mm

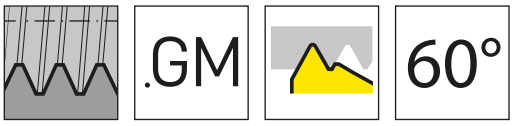

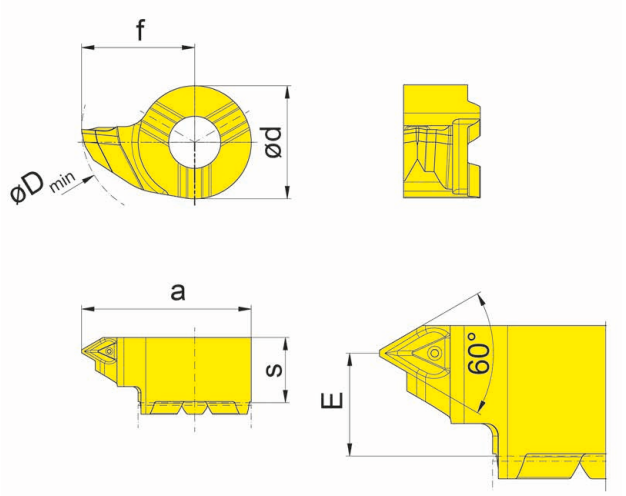

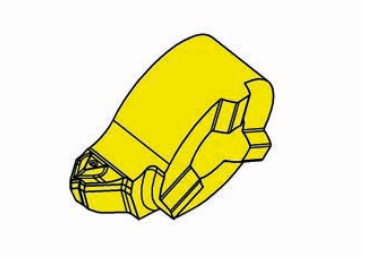

R=右手型-如图
R = right hand version shown

L=左手型
L = left hand version

硬质合金牌号
Carbide grades

▲ 库存
on stock

Δ 4周
4 weeks

产品型号 Part number	P	E	f	a	d	s	D_{min}	HIS		EG55
RS114.0510.GM2	1	4.1	9	13.5	9	5.2	14	311090R		▲
RS114.0815.GM2	1.5	4.1	9	13.5	9	5.2	14	311090R		▲
RS114.1020.GM2	2	4.1	9	13.5	9	5.2	14	311090R		▲
RS114.1325.GM2	2.5	4.1	9	13.5	9	5.2	14	311090R		▲
LS114.0510.GM2	1	4.1	9	13.5	9	5.2	14	311090L		▲
LS114.0815.GM2	1.5	4.1	9	13.5	9	5.2	14	311090L		▲
LS114.1020.GM2	2	4.1	9	13.5	9	5.2	14	311090L		▲
LS114.1325.GM2	2.5	4.1	9	13.5	9	5.2	14	311090L		▲
									P	●
									M	o
									K	o
									N	-
									S	-
									H	-

J

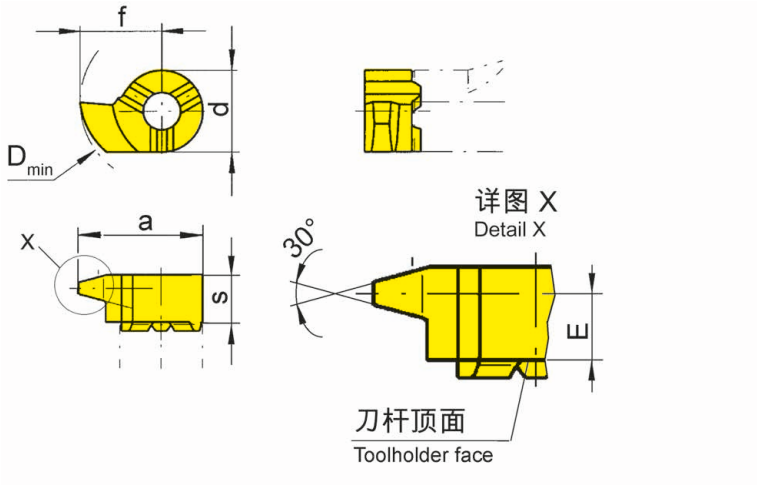

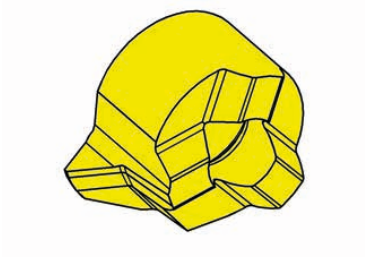

R=右手型-如图
R = right hand version shown

L=左手型
L = left hand version

▲ 库存
on stock

Δ 4周
4 weeks

硬质合金牌号
Carbide grades

产品型号 Part number	P	E	f	a	d	s	D_{min}	HIS		EG55	TN35
R114.1730.01	3	4.3	9	13.5	9	5.5	14	311090R			Δ
R114.2240.01	4	4	9	13.5	9	5.5	14	311090R		▲	▲
R114.2750.01	5	3.55	9	13.5	9	5.5	14	311090R		▲	▲
L114.2240.01	4	4	9	13.5	9	5.5	14	311090L		Δ	▲
L114.2750.01	5	3.55	9	13.5	9	5.5	14	311090L		Δ	▲
									P	●	●
									M	o	●
									K	o	●
									N	-	●
									S	-	●
									H	-	-

J

114

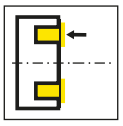

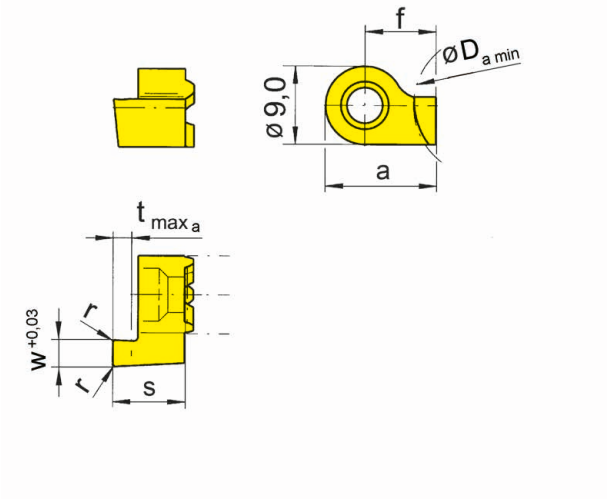

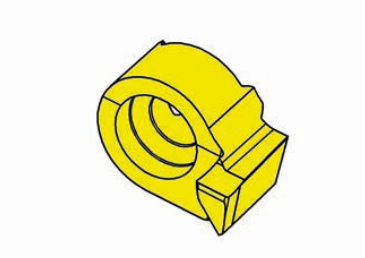

R=右手型-如图
R = right hand version shown

L=左手型
L = left hand version

▲ 库存
on stock

硬质合金牌号
Carbide grades

Δ 4周
4 weeks

产品型号 Part number	w	s	f	a	r	$t_{max\ a}$	$D_{a\ min}$	HIS	EG55	TN35
R114.1205.00	0.5	8.3	7.5	12	-	1	12	311090R	Δ	▲
R114.1210.00	1	8.3	7.5	12	-	1.5	12	311090R	▲	▲
R114.1215.00	1.5	8.3	7.5	12	0.2	2.5	12	311090R	▲	▲
R114.1220.00	2	8.3	7.5	12	0.2	3	12	311090R	▲	▲
R114.1225.00	2.5	8.3	7.5	12	0.2	3	12	311090R	▲	▲
R114.1230.00	3	8.3	7.5	12	0.2	3	12	311090R	▲	▲
R114.1220.5.00	2	10.8	7.5	12	0.2	5	12	311090R	▲	▲
R114.1225.5.00	2.5	10.8	7.5	12	0.2	5	12	311090R	▲	▲
R114.1230.6.00	3	11.8	7.5	12	0.2	6	12	311090R	▲	▲
L114.1205.00	0.5	8.3	7.5	12	-	1	12	311090L	Δ	▲
L114.1210.00	1	8.3	7.5	12	-	1.5	12	311090L	▲	▲
L114.1215.00	1.5	8.3	7.5	12	0.2	2.5	12	311090L	▲	▲
L114.1220.00	2	8.3	7.5	12	0.2	3	12	311090L	▲	▲
L114.1225.00	2.5	8.3	7.5	12	0.2	3	12	311090L	▲	▲
L114.1230.00	3	8.3	7.5	12	0.2	3	12	311090L	▲	▲
L114.1220.5.00	2	10.8	7.5	12	0.2	5	12	311090L	▲	▲
L114.1225.5.00	2.5	10.8	7.5	12	0.2	5	12	311090L	▲	▲
L114.1230.6.00	3	11.8	7.5	12	0.2	6	12	311090L	▲	▲

	EG55	TN35
P	●	●
M	o	●
K	o	●
N	-	●
S	-	●
H	-	-

适用于中心线**后**加工
Machining BEHIND centre line

R=逆时针方向旋转 使用114系列端面槽刀片和B114刀杆时,l1和 l2 会增加3.0/5.5或者 6.5mm。
R = rotation anti-clockwise! Using the face grooving insert type 114 on toolholder type B114 the size l1 and l2 will be enlarged by 3,0 / 5,5 or 6,5 mm.

J

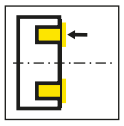

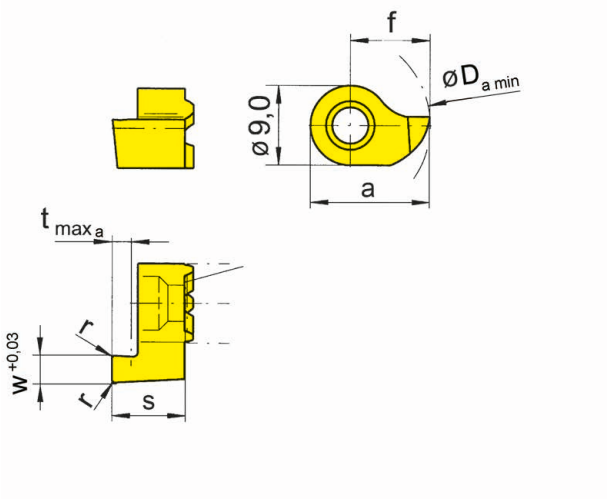

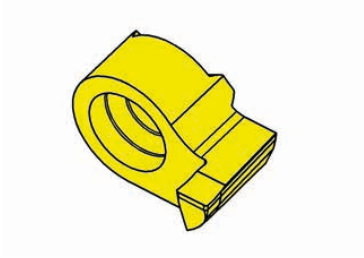

R=右手型-如图
R = right hand version shown

L=左手型
L = left hand version

▲ 库存
on stock

硬质合金牌号
Carbide grades

Δ 4周
4 weeks

产品型号 Part number	w	s	f	a	r	$t_{max\,a}$	$D_{a\,min}$	HIS		MG12	EG55	TF45	TN35
R114.1410.00	1	8.3	9	13.5	-	1.5	14	311090R		Δ	▲		▲
R114.1415.00	1.5	8.3	9	13.5	0.2	2.5	14	311090R			▲		▲
R114.1420.00	2	8.3	9	13.5	0.2	3	14	311090R			▲		▲
R114.1425.00	2.5	8.3	9	13.5	0.2	3	14	311090R			▲		▲
R114.1430.00	3	8.3	9	13.5	0.2	3	14	311090R		▲	▲		▲
R114.1420.5.00	2	10.8	9	13.5	0.2	5	14	311090R			▲		▲
R114.1425.5.00	2.5	10.8	9	13.5	0.2	5	14	311090R			▲		▲
R114.1430.6.00	3	11.8	9	13.5	0.2	6	14	311090R			▲		▲
L114.1410.00	1	8.3	9	13.5	-	1.5	14	311090L		Δ	▲		▲
L114.1415.00	1.5	8.3	9	13.5	0.2	2.5	14	311090L			▲		▲
L114.1420.00	2	8.3	9	13.5	0.2	3	14	311090L			▲		▲
L114.1425.00	2.5	8.3	9	13.5	0.2	3	14	311090L			▲		▲
L114.1430.00	3	8.3	9	13.5	0.2	3	14	311090L		Δ			▲
L114.1420.5.00	2	10.8	9	13.5	0.2	5	14	311090L			▲		▲
L114.1425.5.00	2.5	10.8	9	13.5	0.2	5	14	311090L			▲		▲
L114.1430.6.00	3	11.8	9	13.5	0.2	6	14	311090L			▲		▲

适用于中心线**前**加工
Machining IN-FRONT of centre line

R=顺时针旋转！使用114刀片和B114刀杆时刀杆时，l1和l2会相应增加3.0/5.5或6.5 mm。
R = rotation clockwise! Using the face grooving insert type 114 on toolholder type B114 the size l1 and l2 will be enlarged by 3,0 / 5,5 or 6,5 mm.

P	o	●	●	●
M	-	o	●	●
K	-	o	●	●
N	-	-	●	●
S	-	-	●	●
H	-	-	-	-

J

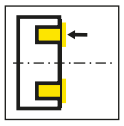

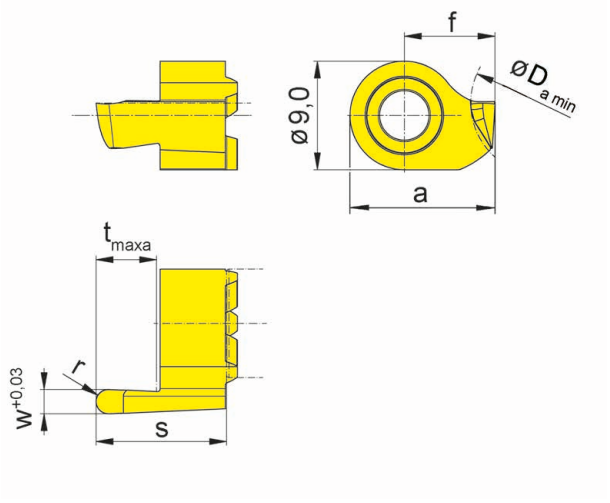

R=右手型-如图
R = right hand version shown

L=左手型
L = left hand version

▲ 库存
on stock

硬质合金牌号
Carbide grades

Δ 4周
4 weeks

产品型号 Part number	w	s	f	a	r	$t_{max\ a}$	$D_{a\ min}$	HIS	EG55	TN35
R114.1220.5.10	2	10.8	7.5	12	1	5	12	311090R	▲	▲
R114.1225.5.12	2.5	10.8	7.5	12	1.25	5	12	311090R	▲	▲
R114.1230.6.15	3	11.8	7.5	12	1.5	6	12	311090R	▲	▲
L114.1220.5.10	2	10.8	7.5	12	1	5	12	311090L	▲	▲
L114.1225.5.12	2.5	10.8	7.5	12	1.25	5	12	311090L	▲	▲
L114.1230.6.15	3	11.8	7.5	12	1.5	6	12	311090L	▲	▲

	EG55	TN35
P	●	●
M	o	●
K	o	●
N	-	●
S	-	●
H	-	-

圆头刀片 适用于中心线**后**加工
Full radius Machining BEHIND centre line

R = 顺时针旋转！使用114系列端面槽刀片和B114刀杆时，l1和l2将会增加5.5 mm或6.5mm。
R = rotation anti-clockwise! Using the face grooving insert type 114 on toolholder type B114 the size l1 and l2 will be enlarged by 5,5 mm or 6,5 mm.

J

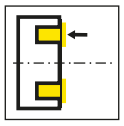

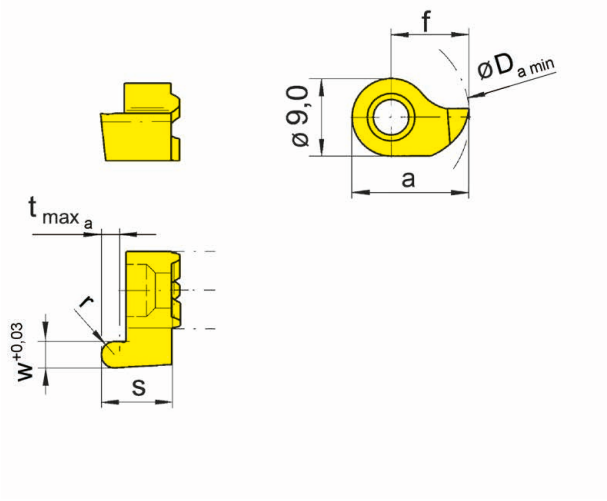

R=右手型-如图
R = right hand version shown

L=左手型
L = left hand version

▲ 库存
on stock

硬质合金牌号
Carbide grades

Δ 4周
4 weeks

产品型号 Part number	w	s	f	a	r	$t_{max\ a}$	$D_{a\ min}$	HIS		EG55	TN35
R114.1410.05	1	8.3	9	13.5	0.5	1.5	14	311090R		▲	▲
R114.1416.08	1.6	8.3	9	13.5	0.8	2.5	14	311090R		▲	▲
R114.1420.10	2	8.3	9	13.5	1	3	14	311090R		▲	▲
R114.1425.12	2.5	8.3	9	13.5	1.25	3	14	311090R		▲	▲
R114.1430.15	3	8.3	9	13.5	1.5	3	14	311090R		▲	▲
L114.1410.05	1	8.3	9	13.5	0.5	1.5	14	311090L		▲	▲
L114.1416.08	1.6	8.3	9	13.5	0.8	2.5	14	311090L		▲	▲
L114.1420.10	2	8.3	9	13.5	1	3	14	311090L		▲	▲
L114.1425.12	2.5	8.3	9	13.5	1.25	3	14	311090L		▲	▲
L114.1430.15	3	8.3	9	13.5	1.5	3	14	311090L		Δ	▲
									P	●	●
									M	o	●
									K	o	●
									N	-	●
									S	-	●
									H	-	-

圆头刀片 适用于中心线 **前**加工
Full radius Machining IN-FRONT of centre line

R=逆时针旋转 使用114系列端面槽刀片和B114刀杆时，l1和l2会增大3.0 mm。
R = rotation clockwise! Using the face grooving insert type 114 on toolholder type B114 the size l1 and l2 will be enlarged by 3,0 mm.

J

J

116

刀杆和刀片

Toolholder and Inserts

K

刀杆
Toolholder
B116

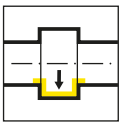

页/Page
322-323

刀夹
Cartridge
145

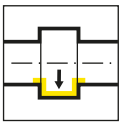

页/Page
324

刀片
Insert
116/S116

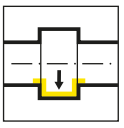

页/Page
325-326, 328

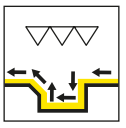

页/Page
327

页/Page
329

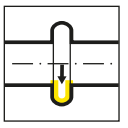

页/Page
330

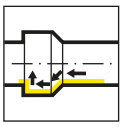

页/Page
331, 333

页/Page
332

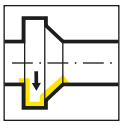

页/Page
334

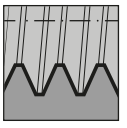

页/Page
335-340

K

孔径 Bore Ø	产品线 / Product line											
	105	109	110	106	107	108	10P	111	11P	114	116	18P
≥ 0.2	•											
≥ 0.5	•											
≥ 0.7	•											
≥ 1.0	•											
≥ 1.5	•											
≥ 2.0	•											
≥ 3.0	•											
≥ 4.0	•											
≥ 5.0	•											
≥ 6.0	•	•	•	•								
≥ 6.8		•	•	•								
≥ 7.0		•			•							
≥ 7.8			•		•	•						
≥ 8.0			•		•	•						
≥ 9.0			•		•	•						
≥ 10.0			•				•	•	•			
≥ 10.5									•			
≥ 11.0								•	•			
≥ 11.5									•			
≥ 13.8										•		
≥ 14.0										•	•	
≥ 16.0											•	
≥ 16.5										(•)		
≥ 18.0												•
槽深 Depth of groove	2.5	2.5	4.0	0.8	2.0	1.0	3.0	2.3	3.5	4.0 (6.5)	4.3	8.0
槽宽 Width of groove	0.5- 2.0	1.0- 2.0	1.0- 3.0	0.7- 1.5	1.0- 2.0	0.7- 2.0	1.0- 3.0	0.7- 3.0	1.0- 3.0	0.7- 3.0	0.7- 4.0	2.0- 3.0
加工 / Machining												
切槽 Grooving	•	•	•	•	•	•	•	•	•	•	•	•
镗孔 Boring	•	•	•	•	•	•		•		•	•	
螺纹切削 Threading	•	•			•	•		•		•	•	
倒角 Chamfering	•	•			•	•		•		•	•	
端面切槽 Face Grooving	•	•	•							•		
镗孔和仿形加工 Boring and Profiling	•											

K

B116

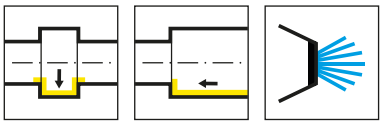

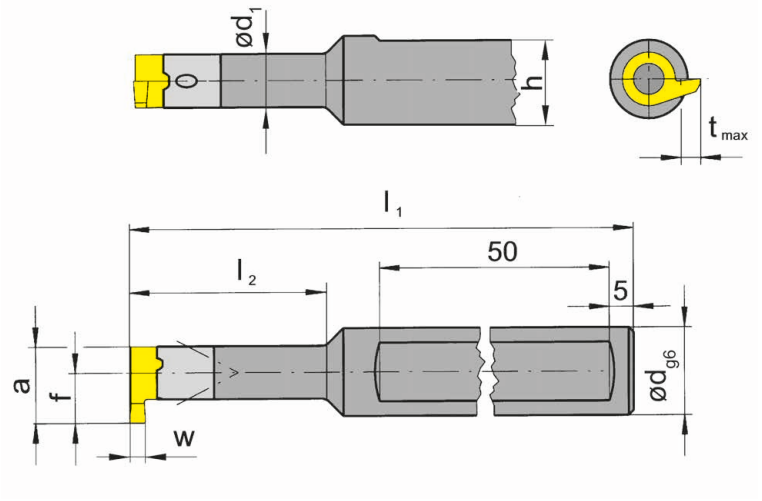

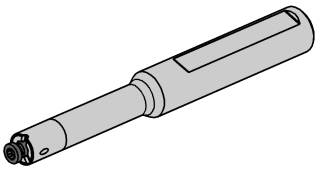

图示=右手型
Picture = right hand cutting version

产品型号 Part number	d	l_1	l_2	h	d_1	HWS
B116.0012.01	12	130	40	11	11	116110R • 116110L
B116.0012.02	12	130	56	11	11	116110R • 116110L
B116.0012.03	12	150	80	11	11	116110R • 116110L
B116.0016.01	16	130	40	15	11	116110R • 116110L
B116.0016.02	16	130	56	15	11	116110R • 116110L
B116.0016.03	16	150	80	15	11	116110R • 116110L

w,a,tmax和f见刀片
w, a, tmax and f see inserts

K

配件
Spare Parts

刀杆 Toolholder	锁紧螺钉 Clamping Screw	TORX PLUS®扳手 TORX PLUS® Wrench
B116...	**5.13T20EP**	**T20PQ**

B116

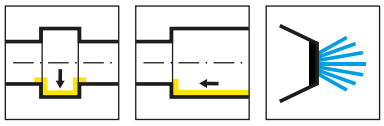

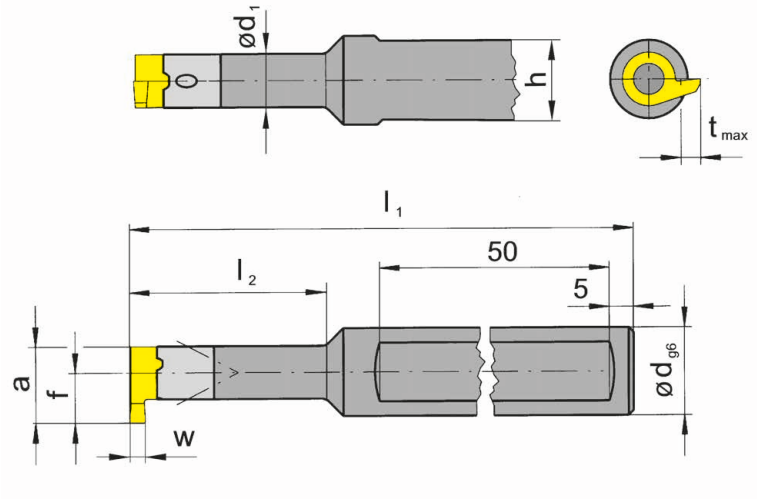

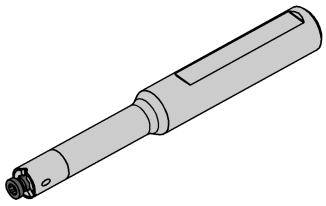

图示=右手型
Picture = right hand cutting version

产品型号 Part number	d	l_1	l_2	h	d_1	HWS
B116.0012.2.01	12	130	40	11	11	116110R • 116110L
B116.0012.2.02	12	130	56	11	11	116110R • 116110L
B116.0012.2.03	12	150	80	11	11	116110R • 116110L
B116.0016.2.01	16	130	40	14	11	116110R • 116110L
B116.0016.2.02	16	130	56	14	11	116110R • 116110L
B116.0016.2.03	16	150	80	14	11	116110R • 116110L

w,a,tmax和f见刀片
w, a, tmax and f see inserts

K

配件
Spare Parts

刀杆 Toolholder	锁紧螺钉 Clamping Screw	TORX PLUS®扳手 TORX PLUS® Wrench
B116...	**5.13T20EP**	**T20PQ**

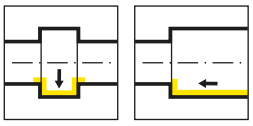

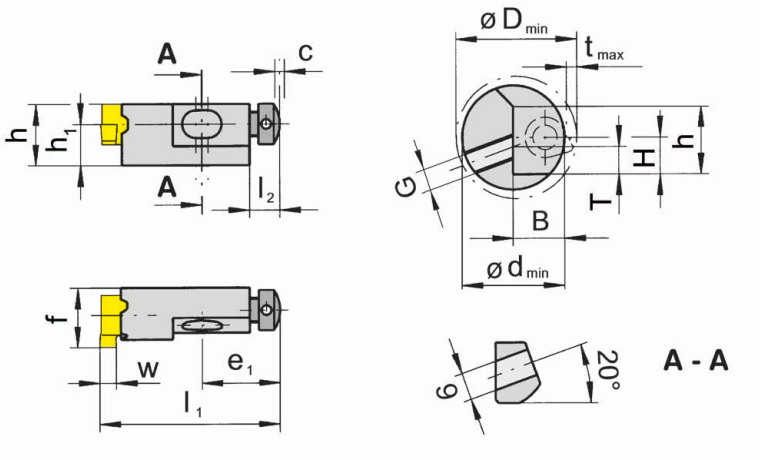

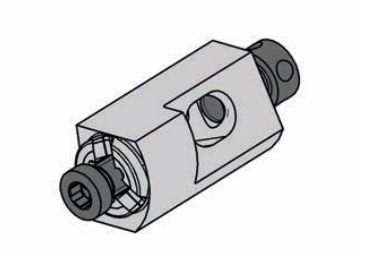

产品型号 Part number	h	l_1	h_1	f	E_1	l_2	C	D_{min}	t_{max}	HWS
L145.1012.00	17	36	10	16.7	13.8	5	1	32	4.3	116110R • 116110L

w见刀片
w see inserts

K

配件
Spare Parts

刀夹 Cartridge	锁紧螺钉 Clamping Screw	TORX PLUS®扳手 TORX PLUS® Wrench
L145.1012.00	**5.13T20EP**	**T20PQ**

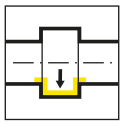

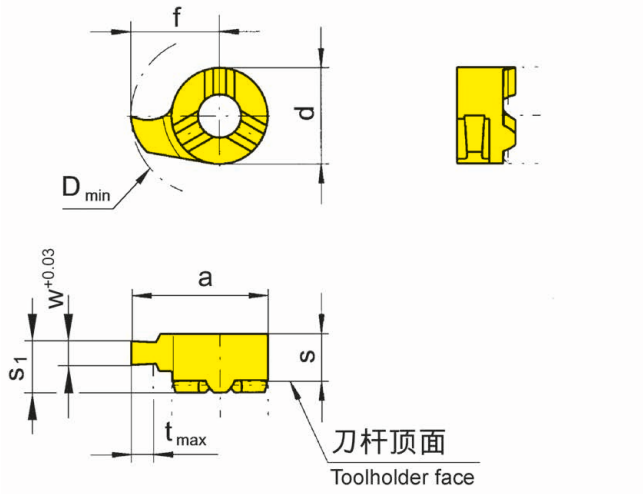

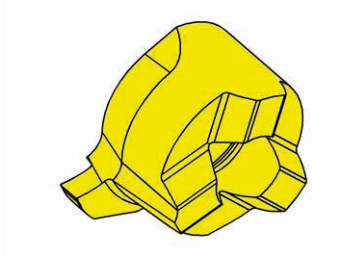

R=右手型-如图
R = right hand version shown

L=左手型
L = left hand version

硬质合金牌号
Carbide grades

▲ 库存
on stock

Δ 4周
4 weeks

产品型号 Part number	w	Nw	s	f	a	s_1	d	t_{max}	D_{min}	HIS		EG55	TN35
R116.0070.00	0.74	0.7	5.5	10.2	15.7	5.3	11	1.2	16	116110R		▲	▲
R116.0080.00	0.84	0.8	5.5	10.2	15.7	5.3	11	1.3	16	116110R			▲
R116.0090.00	0.94	0.9	5.5	10.2	15.7	5.3	11	1.5	16	116110R		▲	▲
L116.0070.00	0.74	0.7	5.5	10.2	15.7	5.3	11	1.2	16	116110L		Δ	▲
L116.0080.00	0.84	0.8	5.5	10.2	15.7	5.3	11	1.3	16	116110L		Δ	Δ
L116.0090.00	0.94	0.9	5.5	10.2	15.7	5.3	11	1.5	16	116110L		Δ	▲
											P	●	●
											M	o	●
											K	o	●
											N	-	●
											S	-	●
											H	-	-

切削深度受限
not face cutting, limited depth of cut

K

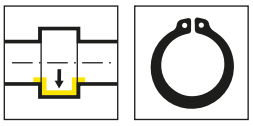

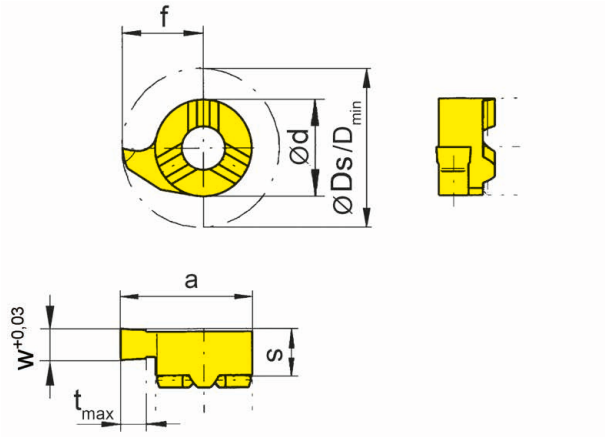

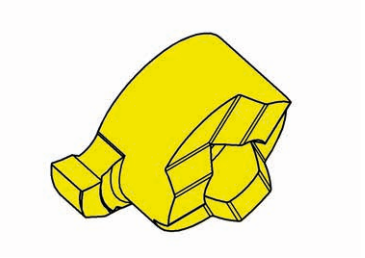

R=右手型-如图
R = right hand version shown

L=左手型
L = left hand version

▲ 库存
on stock

硬质合金牌号
Carbide grades

Δ 4周
4 weeks

产品型号 Part number	w	Nw	s	f	Ds	a	d	t_{max}	D_{min}	HIS		MG12	EG55	TH35	TN35
R116.0110.00	1.19	1.1	5.3	10.2	20.4	15.7	11	4.3	16	116110R		▲	▲	▲	▲
R116.0130.00	1.39	1.3	5.3	10.2	20.4	15.7	11	4.3	16	116110R		▲	▲	▲	▲
R116.0160.00	1.69	1.6	5.3	10.2	20.4	15.7	11	4.3	16	116110R		▲	▲	▲	▲
L116.0110.00	1.19	1.1	5.3	10.2	20.4	15.7	11	4.3	16	116110L		▲		▲	▲
L116.0130.00	1.39	1.3	5.3	10.2	20.4	15.7	11	4.3	16	116110L		▲	▲	▲	▲
L116.0160.00	1.69	1.6	5.3	10.2	20.4	15.7	11	4.3	16	116110L		▲	▲	▲	▲
											P	o	●	●	●
											M	-	o	●	●
											K	-	o	●	●
											N	-	-	●	●
											S	-	-	●	●
											H	-	-	-	-

K

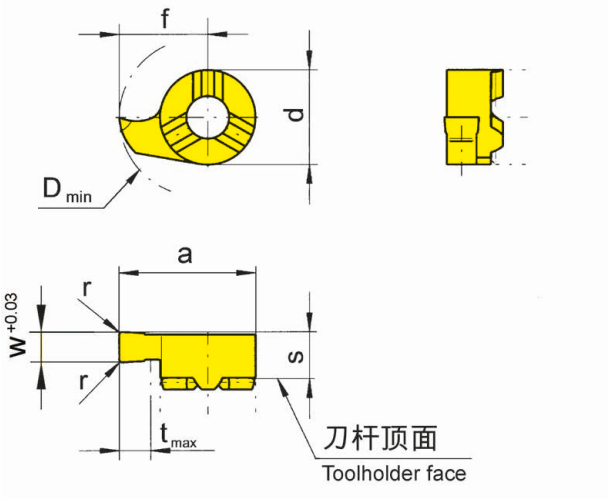

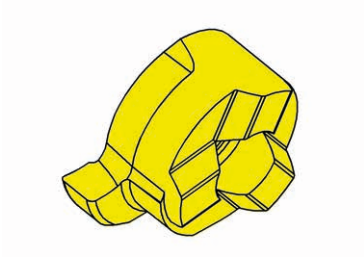

R=右手型-如图
R = right hand version shown

L=左手型
L = left hand version

▲ 库存
on stock

硬质合金牌号
Carbide grades

Δ 4周
4 weeks

产品型号 Part number	w	s	f	a	r	d	t_{max}	D_{min}	HIS		EG55	TH35	TN35
R116.0200.02	2	5.3	10.2	15.7	0.2	11	4.3	16	116110R		▲	▲	▲
L116.0200.02	2	5.3	10.2	15.7	0.2	11	4.3	16	116110L		▲	▲	▲
										P	●	●	●
										M	o	●	●
										K	o	●	●
										N	-	●	●
										S	-	●	●
										H	-	-	-

K

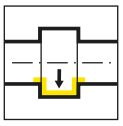

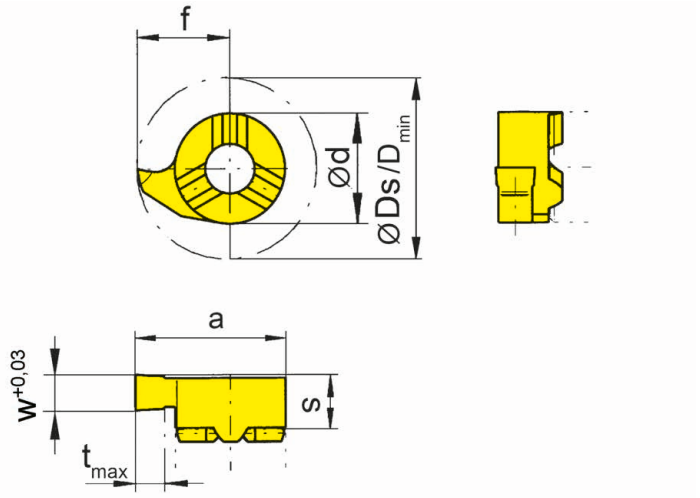

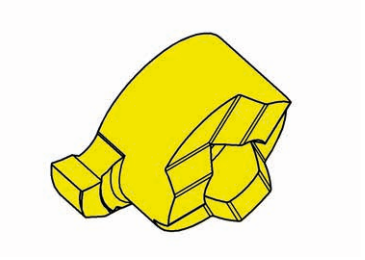

R=右手型-如图
R = right hand version shown

L=左手型
L = left hand version

▲ 库存
on stock

硬质合金牌号
Carbide grades

Δ 4周
4 weeks

产品型号 Part number	w	s	f	Ds	a	d	t_{max}	D_{min}	HIS		MG12	EG55	TH35	TN35
R116.0200.00	2	5.3	10.2	20.4	15.7	11	4.3	16	116110R		▲	▲	▲	▲
R116.0250.00	2.5	5.3	10.2	20.4	15.7	11	4.3	16	116110R		▲	▲	▲	▲
R116.0300.00	3	5.3	10.2	20.4	15.7	11	4.3	16	116110R		▲	▲	▲	▲
R116.0350.00	3.5	5.3	10.2	20.4	15.7	11	4.3	16	116110R		▲	▲	▲	▲
R116.0400.00	4	5.3	10.2	20.4	15.7	11	4.3	16	116110R		▲	▲	▲	▲
L116.0200.00	2	5.3	10.2	20.4	15.7	11	4.3	16	116110L		▲	▲	▲	▲
L116.0250.00	2.5	5.3	10.2	20.4	15.7	11	4.3	16	116110L		▲		▲	▲
L116.0300.00	3	5.3	10.2	20.4	15.7	11	4.3	16	116110L		▲	▲	▲	▲
L116.0350.00	3.5	5.3	10.2	20.4	15.7	11	4.3	16	116110L		▲		▲	▲
L116.0400.00	4	5.3	10.2	20.4	15.7	11	4.3	16	116110L		▲		▲	▲
										P	o	●	●	●
										M	-	o	●	●
										K	-	o	●	●
										N	-	-	●	●
										S	-	-	●	●
										H	-	-	-	-

K

S116 Ø ≥ 16 mm

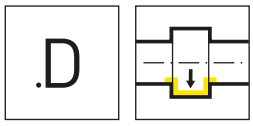

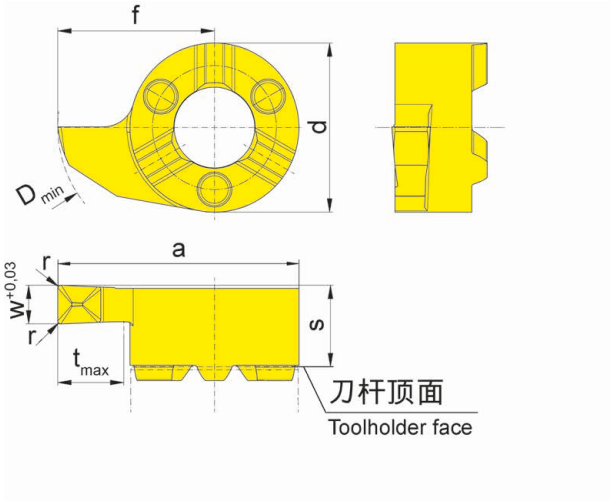

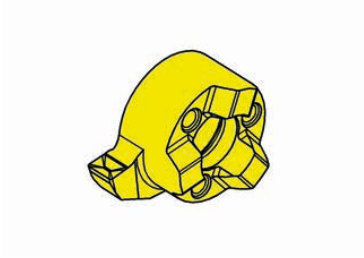

R=右手型-如图
R = right hand version shown

L=左手型
L = left hand version

▲ 库存
on stock

Δ 4周
4 weeks

硬质合金牌号
Carbide grades

产品型号 Part number	w	s	f	a	r	d	t_{max}	D_{min}	HIS		EG55	TH35
RS116.0200.D2	2	5.3	10.2	15.7	0.2	11	4.3	16	116110R		▲	▲
RS116.0250.D2	2.5	5.3	10.2	15.7	0.2	11	4.3	16	116110R		▲	▲
RS116.0300.D2	3	5.3	10.2	15.7	0.2	11	4.3	16	116110R		▲	▲
LS116.0200.D2	2	5.3	10.2	15.7	0.2	11	4.3	16	116110L			▲
LS116.0250.D2	2.5	5.3	10.2	15.7	0.2	11	4.3	16	116110L			▲
LS116.0300.D2	3	5.3	10.2	15.7	0.2	11	4.3	16	116110L		Δ	▲
										P	●	●
										M	o	●
										K	o	●
										N	-	●
										S	-	●
										H	-	-

K

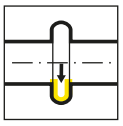

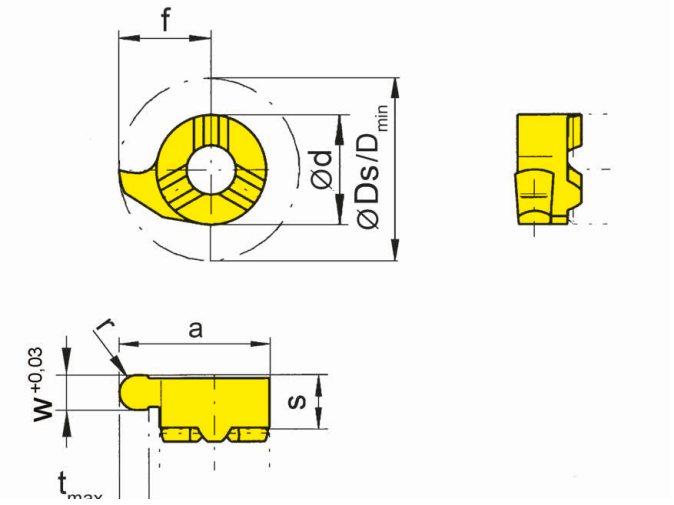

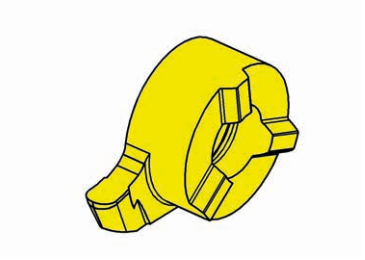

R=右手型-如图
R = right hand version shown

L=左手型
L = left hand version

硬质合金牌号
Carbide grades

▲ 库存
on stock

Δ 4周
4 weeks

产品型号 Part number	w	s	f	Ds	a	r	d	t_{max}	D_{min}	HIS		MG12	EG55	TH35	TN35
R116.0009.18	1.8	5.3	10.2	20.4	15.7	0.9	11	4.3	16	116110R		▲	▲	▲	▲
R116.0011.22	2.2	5.3	10.2	20.4	15.7	1.1	11	4.3	16	116110R		▲	▲	▲	▲
R116.0015.30	3	5.3	10.2	20.4	15.7	1.5	11	4.3	16	116110R		▲	▲	▲	▲
R116.0020.40	4	5.3	10.2	20.4	15.7	2	11	4.3	16	116110R		Δ	▲	▲	▲
L116.0009.18	1.8	5.3	10.2	20.4	15.7	0.9	11	4.3	16	116110L		Δ	▲	▲	▲
L116.0011.22	2.2	5.3	10.2	20.4	15.7	1.1	11	4.3	16	116110L		Δ	▲	▲	▲
L116.0015.30	3	5.3	10.2	20.4	15.7	1.5	11	4.3	16	116110L		Δ	▲	▲	▲
L116.0020.40	4	5.3	10.2	20.4	15.7	2	11	4.3	16	116110L		Δ		▲	▲
											P	o	●	●	●
											M	-	o	●	●
											K	-	o	●	●
											N	-	-	●	●
											S	-	-	●	●
											H	-	-	-	-

K

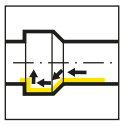

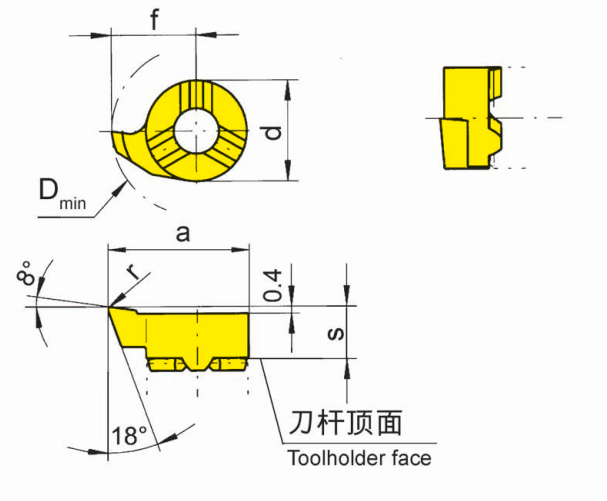

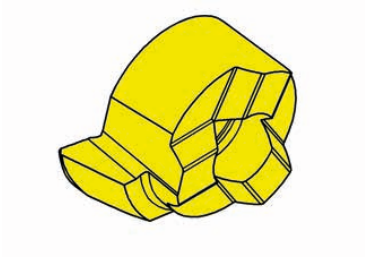

R=右手型-如图
R = right hand version shown

L=左手型
L = left hand version

▲ 库存
on stock

Δ 4周
4 weeks

硬质合金牌号
Carbide grades

产品型号 Part number	s	f	a	r	d	D_{min}	HIS		EG55	TH35	TN35
R116.1897.02	5.3	9.7	15.2	0.2	11	15.5	116110R		▲	▲	▲
L116.1897.02	5.3	9.7	15.2	0.2	11	15.5	116110L		▲	▲	▲
								P	●	●	●
								M	o	●	●
								K	o	●	●
								N	-	●	●
								S	-	●	●
								H	-	-	-

K

S116 Ø ≥ 15.5 mm

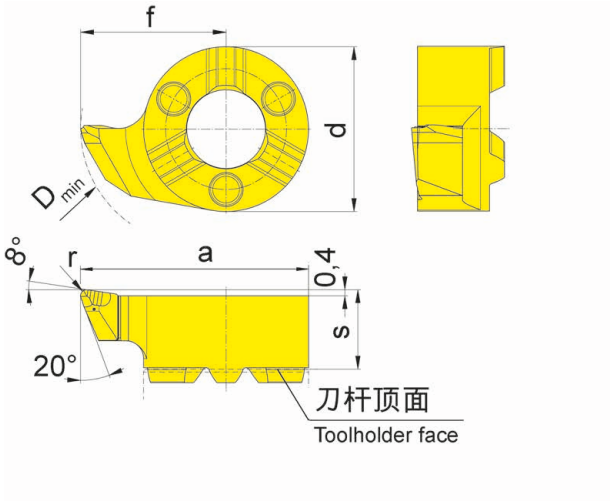

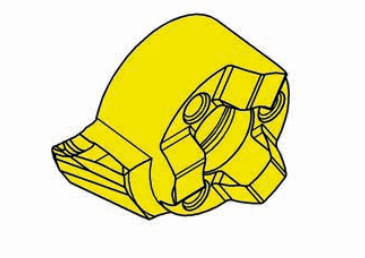

R=右手型-如图
R = right hand version shown

L=左手型
L = left hand version

▲ 库存
on stock

Δ 4周
4 weeks

产品型号 Part number	s	f	a	r	d	D_{min}	HIS		硬质合金牌号 Carbide grades EG55	TH35
RS116.1897.R2	5.3	9.7	15.2	0.2	11	15.5	116110R		▲	▲
RS116.1897.R4	5.3	9.7	15.2	0.4	11	15.5	116110R		▲	▲
LS116.1897.R2	5.3	9.7	15.2	0.2	11	15.5	116110L		▲	▲
LS116.1897.R4	5.3	9.7	15.2	0.4	11	15.5	116110L		▲	▲
								P	●	●
								M	o	●
								K	o	●
								N	-	●
								S	-	●
								H	-	-

K

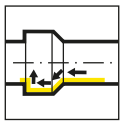

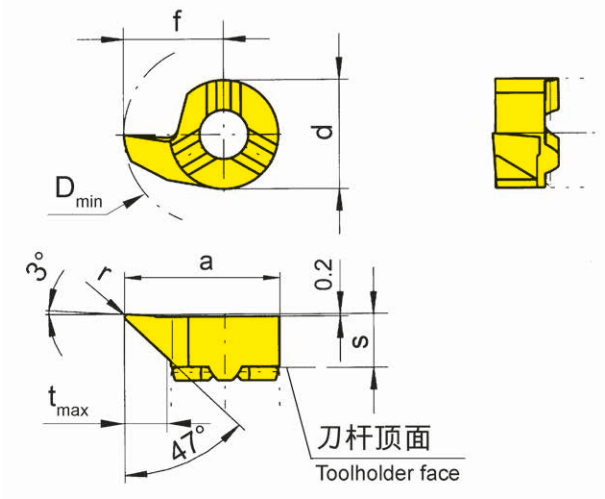

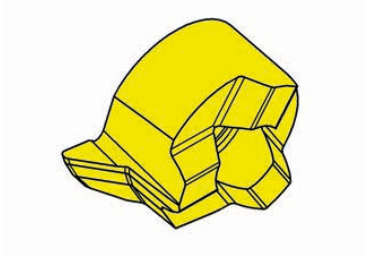

R=右手型-如图
R = right hand version shown

L=左手型
L = left hand version

▲ 库存
on stock

Δ 4周
4 weeks

硬质合金牌号
Carbide grades

产品型号 Part number	s	f	a	r	d	t_{max}	D_{min}	HIS		EG55	TH35	TN35
R116.4702.02	5.3	10.2	15.7	0.2	11	4.3	16	116110R		▲	▲	▲
R116.4702.04	5.3	10.2	15.7	0.4	11	4.3	16	116110R		▲	▲	
L116.4702.02	5.3	10.2	15.7	0.2	11	4.3	16	116110L		▲	▲	▲
L116.4702.04	5.3	10.2	15.7	0.4	11	4.3	16	116110L		▲	▲	
									P	●	●	●
									M	o	●	●
									K	o	●	●
									N	-	●	●
									S	-	●	●
									H	-	-	-

K

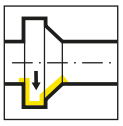

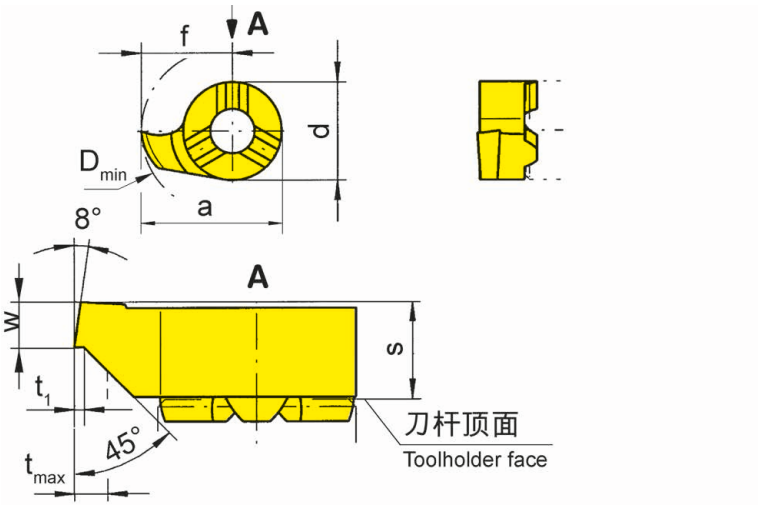

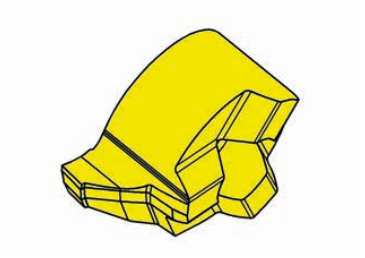

R=右手型-如图
R = right hand version shown

L=左手型
L = left hand version

▲ 库存
on stock

Δ 4周
4 weeks

硬质合金牌号
Carbide grades

产品型号 Part number	w	s	f	a	d	t_{max}	t_1	D_{min}	HIS		MG12	EG55	TI25
R116.0815.45	1.5	5.3	10.2	15.7	11	1.5	0.2	16	116110R		▲	▲	▲
L116.0815.45	1.5	5.3	10.2	15.7	11	1.5	0.2	16	116110L		Δ	▲	▲
										P	o	●	●
										M	-	o	●
										K	-	o	●
										N	-	-	●
										S	-	-	●
										H	-	-	-

K

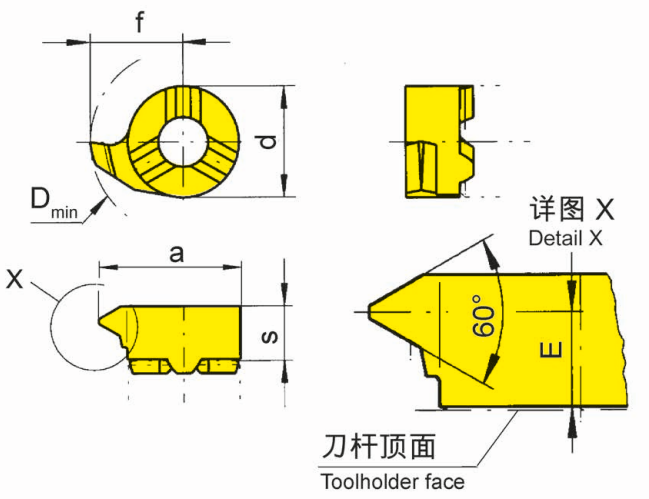

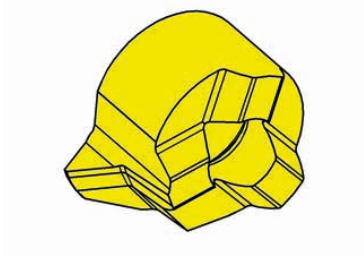

R=右手型-如图
R = right hand version shown

L=左手型
L = left hand version

▲ 库存
on stock

Δ 4周
4 weeks

硬质合金牌号
Carbide grades

产品型号 Part number	P	P_{max}	E	f	a	d	s	D_{min}	HIS		EG55	TH35	TN35
R116.0510.01	1	1.25	4.7	10.2	15.7	11	5.5	16	116110R		▲	▲	▲
R116.0815.01	1.5	1.75	4.5	10.2	15.7	11	5.5	16	116110R		▲	▲	▲
R116.1020.01	2		4.3	10.2	15.7	11	5.5	16	116110R		▲	▲	▲
R116.1325.01	2.5		4.2	10.2	15.7	11	5.5	16	116110R		▲	▲	▲
L116.0510.01	1	1.25	4.7	10.2	15.7	11	5.5	16	116110L		Δ		Δ
L116.0815.01	1.5	1.75	4.5	10.2	15.7	11	5.5	16	116110L		Δ	Δ	▲
L116.1020.01	2		4.3	10.2	15.7	11	5.5	16	116110L		Δ	Δ	▲
L116.1325.01	2.5		4.2	10.2	15.7	11	5.5	16	116110L		Δ	▲	▲
										P	●	●	●
										M	o	●	●
										K	o	●	●
										N	-	●	●
										S	-	●	●
										H	-	-	-

K

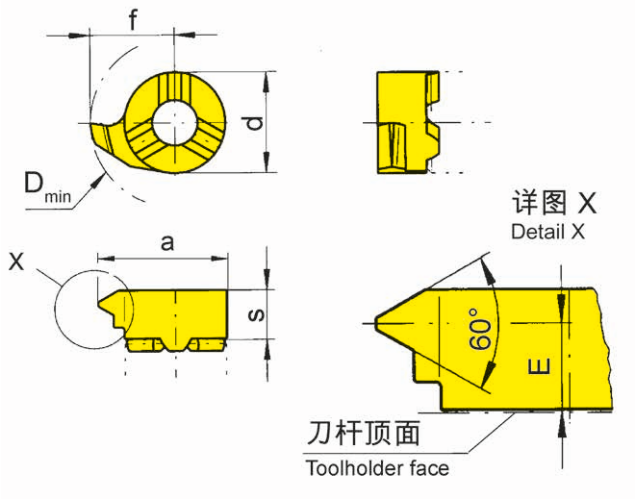

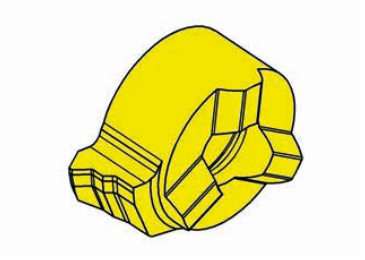

R=右手型-如图
R = right hand version shown

L=左手型
L = left hand version

▲ 库存
on stock

Δ 4周
4 weeks

硬质合金牌号
Carbide grades

产品型号 Part number	P	E	f	a	d	s	D_{min}	HIS	EG55	TI25	TN35
R116.0510.02	1	4.7	10.2	15.7	11	5.5	16	116110R	▲	Δ	▲
R116.0815.02	1.5	4.5	10.2	15.7	11	5.5	16	116110R	▲	Δ	▲
R116.1020.02	2	4.3	10.2	15.7	11	5.5	16	116110R	▲		▲
R116.1325.02	2.5	4.2	10.2	15.7	11	5.5	16	116110R	▲		▲
R116.1630.02	3	4	10.2	15.7	11	5.5	16	116110R	▲		▲
R116.1835.02	3.5	3.8	10.2	15.7	11	5.5	16	116110R	▲		▲
R116.2140.02	4	3.6	10.2	15.7	11	5.5	16	116110R	▲		▲
L116.0510.02	1	4.7	10.2	15.7	11	5.5	16	116110L	▲		Δ
L116.0815.02	1.5	4.5	10.2	15.7	11	5.5	16	116110L	Δ		▲
L116.1020.02	2	4.3	10.2	15.7	11	5.5	16	116110L	Δ		▲
L116.1325.02	2.5	4.2	10.2	15.7	11	5.5	16	116110L	Δ		▲
L116.1630.02	3	4	10.2	15.7	11	5.5	16	116110L	▲		▲
L116.1835.02	3.5	3.8	10.2	15.7	11	5.5	16	116110L	Δ		▲
L116.2140.02	4	3.6	10.2	15.7	11	5.5	16	116110L	Δ		Δ

	EG55	TI25	TN35
P	●	●	●
M	o	●	●
K	o	●	●
N	-	●	●
S	-	●	●
H	-	-	-

K

S116 Ø ≥ 16 mm

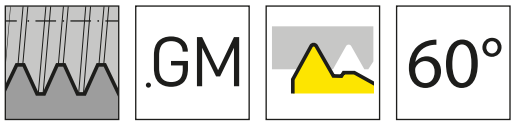

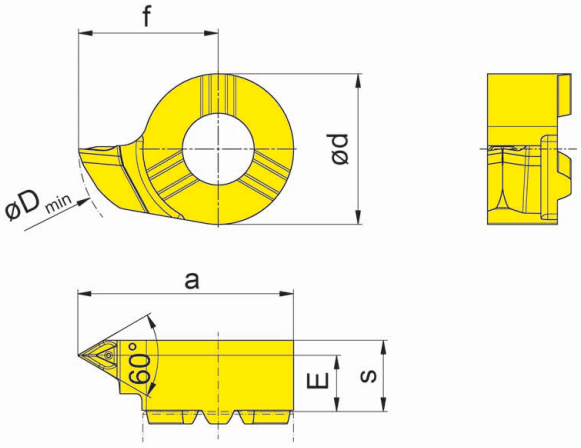

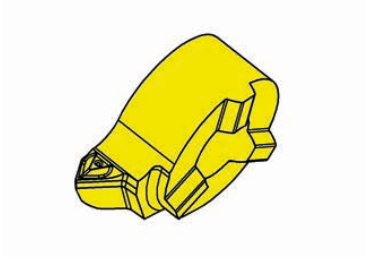

L=左手型-如图
L = left hand version shown

硬质合金牌号
Carbide grades

▲ 库存
on stock

Δ 4周
4 weeks

产品型号 Part number	P	P_{max}	E	f	a	d	s	D_{min}	HIS		EG55
RS116.0510.GM1	1	1.25	4.1	10.2	15.7	11	5.2	16	116110R		▲
RS116.0815.GM1	1.5	1.75	4.1	10.2	15.7	11	5.2	16	116110R		▲
RS116.1020.GM1	2	2	4.1	10.2	15.7	11	5.2	16	116110R		▲
RS116.1325.GM1	2.5	2.5	4.1	10.2	15.7	11	5.2	16	116110R		▲
LS116.0510.GM1	1	1.25	4.1	10.2	15.7	11	5.2	16	116110L		▲
LS116.0815.GM1	1.5	1.75	4.1	10.2	15.7	11	5.2	16	116110L		▲
LS116.1020.GM1	2	2	4.1	10.2	15.7	11	5.2	16	116110L		▲
LS116.1325.GM1	2.5	2.5	4.1	10.2	15.7	11	5.2	16	116110L		▲
										P	●
										M	o
										K	o
										N	-
										S	-
										H	-

K

S116 Ø ≥ 16 mm

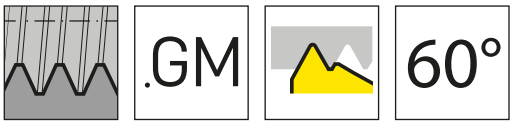

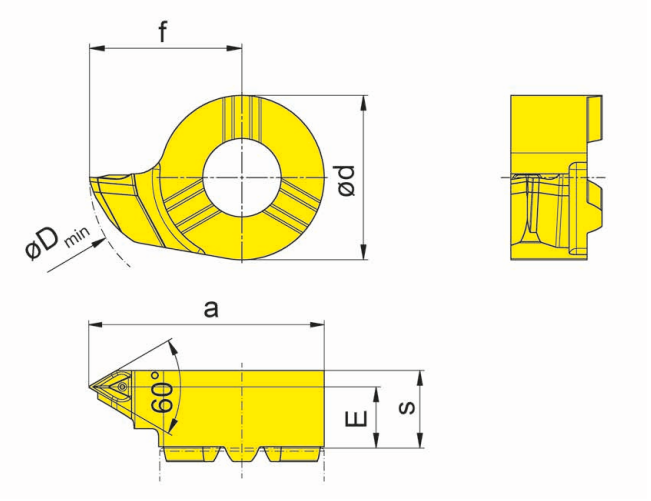

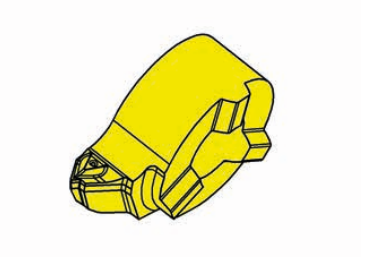

L=左手型-如图
L = left hand version shown

硬质合金牌号
Carbide grades

▲ 库存
on stock

Δ 4周
4 weeks

产品型号 Part number	P	E	f	a	d	s	D_{min}	HIS		EG55
RS116.0510.GM2	1	4.1	10.2	15.7	11	5.2	16	116110R		▲
RS116.0815.GM2	1.5	4.1	10.2	15.7	11	5.2	16	116110R		▲
RS116.1020.GM2	2	4.1	10.2	15.7	11	5.2	16	116110R		▲
RS116.1325.GM2	2.5	4.1	10.2	15.7	11	5.2	16	116110R		▲
LS116.0510.GM2	1	4.1	10.2	15.7	11	5.2	16	116110L		▲
LS116.0815.GM2	1.5	4.1	10.2	15.7	11	5.2	16	116110L		▲
LS116.1020.GM2	2	4.1	10.2	15.7	11	5.2	16	116110L		▲
LS116.1325.GM2	2.5	4.1	10.2	15.7	11	5.2	16	116110L		▲
									P	●
									M	o
									K	o
									N	-
									S	-
									H	-

K

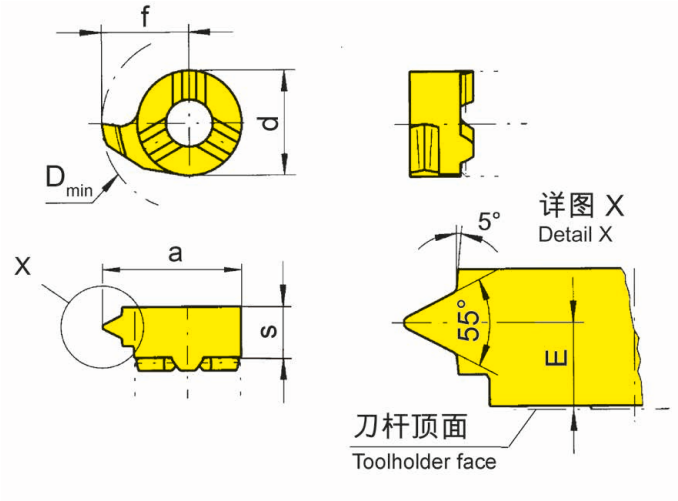

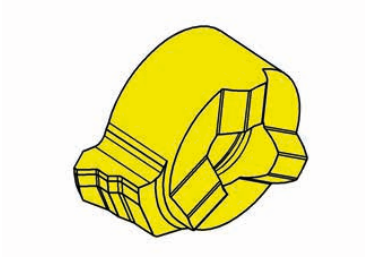

R=右手型-如图
R = right hand version shown

L=左手型
L = left hand version

▲ 库存
on stock

Δ 4周
4 weeks

产品型号 Part number	TPI	E	f	d	s	D_{min}	HIS		硬质合金牌号 Carbide grades EG55	TN35
R116.5511.02	11	3.5	10.2	11	5.5	16	116110R		▲	▲
R116.5514.02	14	3.9	10.2	11	5.5	16	116110R		▲	▲
L116.5511.02	11	3.5	10.2	11	5.5	16	116110L		Δ	Δ
L116.5514.02	14	3.9	10.2	11	5.5	16	116110L		Δ	▲
								P	●	●
								M	o	●
								K	o	●
								N	-	●
								S	-	●
								H	-	-

K

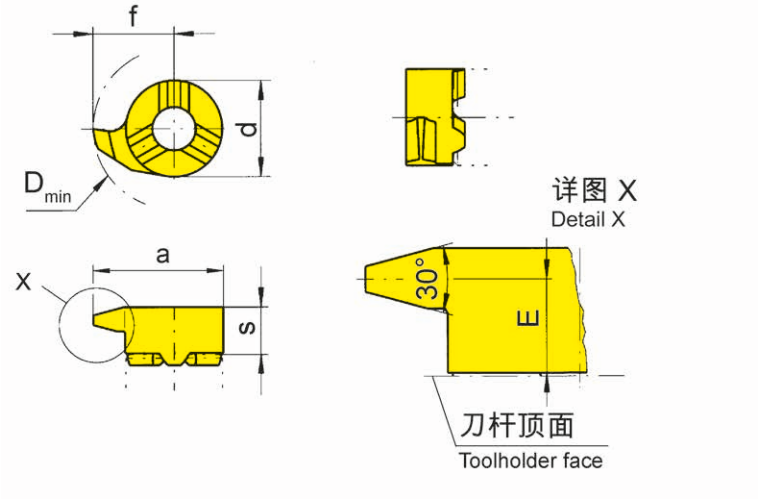

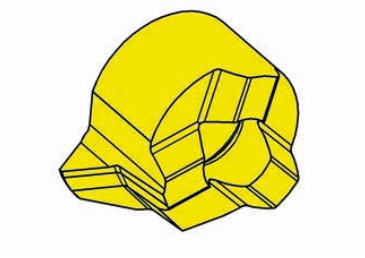

R=右手型-如图
R = right hand version shown

L=左手型
L = left hand version

▲ 库存
on stock

Δ 4周
4 weeks

硬质合金牌号
Carbide grades

产品型号 Part number	P	E	f	a	d	s	D_{min}	螺纹 Thread	HIS		EG55	TI25	TN35
R116.1220.01	2	4.5	9.7	15.2	11	5.5	16	Tr 20x2	116110R		▲		▲
R116.1730.01	3	4.3	9.7	15.2	11	5.5	16	Tr 22x3	116110R		▲		▲
R116.2240.01	4	4	9.7	15.2	11	5.5	16	Tr 22x4	116110R		▲		▲
R116.2750.01	5	3.55	10.2	15.7	11	5.5	16	Tr 24x5	116110R		▲		▲
R116.3560.01	6	3.3	10.2	15.7	11	5.5	16	Tr 30x6	116110R		▲	▲	
L116.1220.01	2	4.5	9.7	15.2	11	5.5	16	Tr 20x2	116110L		Δ		Δ
L116.1730.01	3	4.3	9.7	15.2	11	5.5	16	Tr 22x3	116110L		▲		▲
L116.2240.01	4	4	9.7	15.2	11	5.5	16	Tr 22x4	116110L		▲		▲
L116.2750.01	5	3.55	10.2	15.7	11	5.5	16	Tr 24x5	116110L		▲		▲
L116.3560.01	6	3.3	10.2	15.7	11	5.5	16	Tr 30x6	116110L		▲	▲	
										P	●	●	●
										M	o	●	●
										K	o	●	●
										N	-	●	●
										S	-	●	●
										H	-	-	-

K

18P

刀杆和刀片

Toolholder and Inserts

L

刀杆
Toolholder
B18P

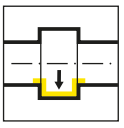

页/Page
344

刀片
Insert
S18P/18P

页/Page
345, 347

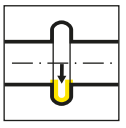

页/Page
346

页/Page
348

孔径 Bore Ø	产品线 / Product line											
	105	109	110	106	107	108	10P	111	11P	114	116	18P
≥ 0.2	•											
≥ 0.5	•											
≥ 0.7	•											
≥ 1.0	•											
≥ 1.5	•											
≥ 2.0	•											
≥ 3.0	•											
≥ 4.0	•											
≥ 5.0	•											
≥ 6.0	•	•	•	•								
≥ 6.8		•	•	•								
≥ 7.0		•			•							
≥ 7.8			•		•	•						
≥ 8.0			•		•	•						
≥ 9.0			•		•	•						
≥ 10.0			•				•	•	•			
≥ 10.5									•			
≥ 11.0								•	•			
≥ 11.5									•			
≥ 13.8										•		
≥ 14.0										•	•	
≥ 16.0											•	
≥ 16.5										(•)		
≥ 18.0												•
槽深 Depth of groove	2.5	2.5	4.0	0.8	2.0	1.0	3.0	2.3	3.5	4.0 (6.5)	4.3	8.0
槽宽 Width of groove	0.5- 2.0	1.0- 2.0	1.0- 3.0	0.7- 1.5	1.0- 2.0	0.7- 2.0	1.0- 3.0	0.7- 3.0	1.0- 3.0	0.7- 3.0	0.7- 4.0	2.0- 3.0
加工 / Machining												
切槽 Grooving	•	•	•	•	•	•	•	•	•	•	•	•
镗孔 Boring	•	•	•	•	•	•		•		•	•	
螺纹切削 Threading	•	•			•	•		•		•	•	
倒角 Chamfering	•	•			•	•		•		•	•	
端面切槽 Face Grooving	•	•	•							•		
镗孔和仿形加工 Boring and Profiling	•											

L

B18P

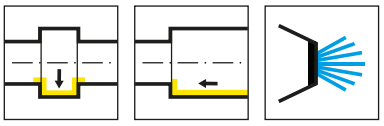

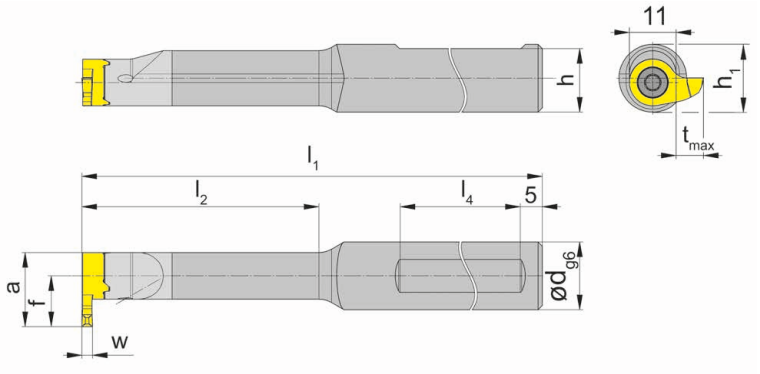

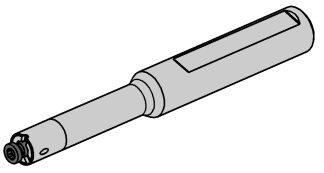

R=右手型-如图
R = right hand version shown

L=左手型
L = left hand version

产品型号 Part number	d	l_1	l_2	h	l_4	h_1	HWS
RB18P.0012.00	12	100	25	11	50	12.5	18P110R
RB18P.0012.01	12	120	40	11	50	12.5	18P110R
RB18P.0016.00	16	100	25	15	50	13	18P110R
RB18P.0016.01	16	120	40	15	50	13	18P110R
RB18P.0016.02	16	130	56	15	50	13	18P110R
RB18P.0016.03	16	150	80	15	50	13	18P110R
LB18P.0012.00	12	100	25	11	50	12.5	18P110L
LB18P.0012.01	12	120	40	11	50	12.5	18P110L
LB18P.0016.00	16	100	25	15	50	13	18P110L
LB18P.0016.01	16	120	40	15	50	13	18P110L
LB18P.0016.02	16	130	56	15	50	13	18P110L
LB18P.0016.03	16	150	80	15	50	13	18P110L

w,a,tmax和f见刀片
w, a, tmax and f see inserts

L

配件
Spare Parts

刀杆 Toolholder	锁紧螺钉 Clamping Screw	TORX PLUS®扳手 TORX PLUS® Wrench
R/LB18P...	**5.13T20EP**	**T20PQ**

S18P Ø ≥ 18 mm

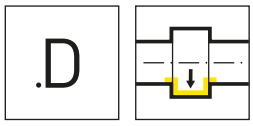

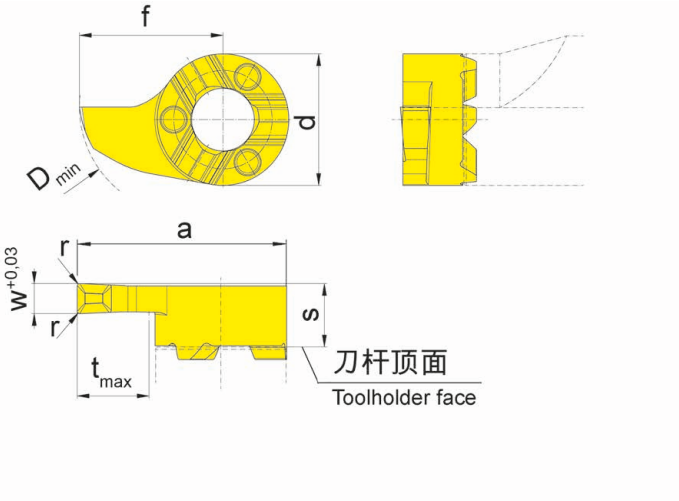

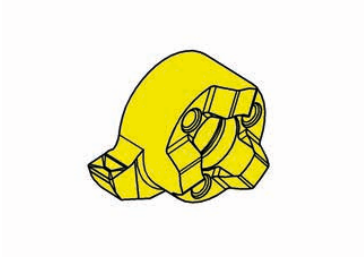

R=右手型-如图
R = right hand version shown

L=左手型
L = left hand version

▲ 库存
on stock

Δ 4周
4 weeks

硬质合金牌号
Carbide grades

产品型号 Part number	w	s	f	a	r	d	t_{max}	D_{min}	HIS		EG55	TH35
RS18P.0200.1.D2	2	5.3	12	17.5	0.2	11	6	18	18P110R		▲	▲
RS18P.0250.1.D2	2.5	5.3	12	17.5	0.2	11	6	18	18P110R		▲	▲
RS18P.0300.1.D2	3	5.3	12	17.5	0.2	11	6	18	18P110R		▲	▲
LS18P.0200.1.D2	2	5.3	12	17.5	0.2	11	6	18	18P110L		▲	▲
LS18P.0250.1.D2	2.5	5.3	12	17.5	0.2	11	6	18	18P110L		▲	▲
LS18P.0300.1.D2	3	5.3	12	17.5	0.2	11	6	18	18P110L		▲	▲
										P	●	●
										M	o	●
										K	o	●
										N	-	●
										S	-	●
										H	-	-

L

18P

Ø ≥ 18 mm

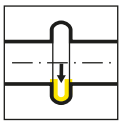

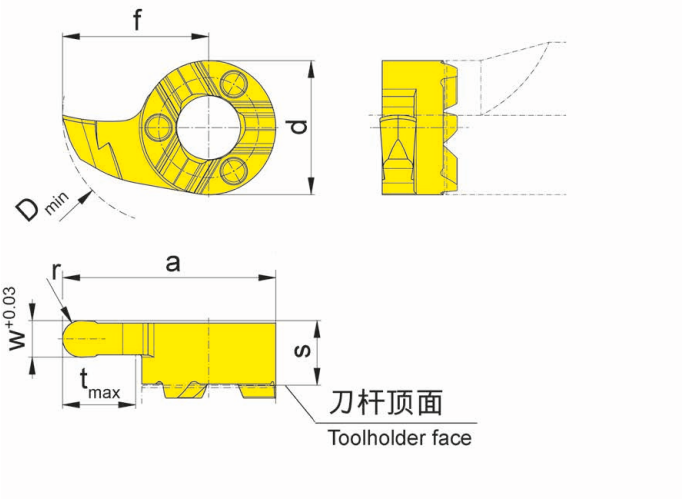

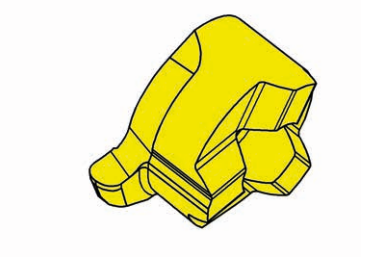

R=右手型-如图
R = right hand version shown

L=左手型
L = left hand version

▲ 库存
on stock

Δ 4周
4 weeks

硬质合金牌号
Carbide grades

产品型号 Part number	w	s	f	a	r	d	t_{max}	D_{min}	HIS		EG55	TH35
R18P.0009.1.18	1.8	5.3	12	17.5	0.9	11	6	18	18P110R		▲	▲
R18P.0011.1.22	2.2	5.3	12	17.5	1.1	11	6	18	18P110R		▲	▲
R18P.0015.1.30	3	5.3	12	17.5	1.5	11	6	18	18P110R		▲	▲
L18P.0009.1.18	1.8	5.3	12	17.5	0.9	11	6	18	18P110L		Δ	▲
L18P.0011.1.22	2.2	5.3	12	17.5	1.1	11	6	18	18P110L		Δ	▲
L18P.0015.1.30	3	5.3	12	17.5	1.5	11	6	18	18P110L		Δ	▲
										P	●	●
										M	o	●
										K	o	●
										N	-	●
										S	-	●
										H	-	-

L

S18P Ø ≥ 20 mm

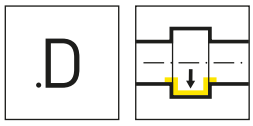

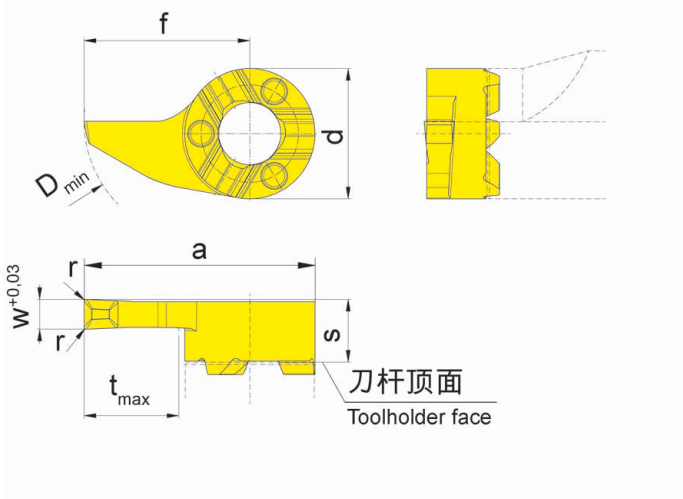

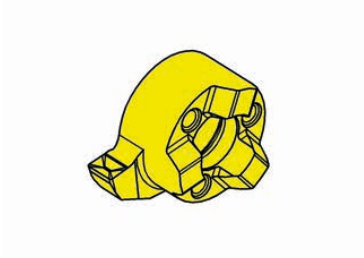

R=右手型-如图
R = right hand version shown

L=左手型
L = left hand version

▲ 库存
on stock

Δ 4周
4 weeks

产品型号 Part number	w	s	f	a	r	d	t_{max}	D_{min}	HIS		硬质合金牌号 Carbide grades EG55	TH35
RS18P.0200.2.D2	2	5.3	14	19.5	0.2	11	8	20	18P110R		▲	▲
RS18P.0250.2.D2	2.5	5.3	14	19.5	0.2	11	8	20	18P110R		▲	▲
RS18P.0300.2.D2	3	5.3	14	19.5	0.2	11	8	20	18P110R		▲	▲
LS18P.0200.2.D2	2	5.3	14	19.5	0.2	11	8	20	18P110L		▲	▲
LS18P.0250.2.D2	2.5	5.3	14	19.5	0.2	11	8	20	18P110L		Δ	▲
LS18P.0300.2.D2	3	5.3	14	19.5	0.2	11	8	20	18P110L		▲	▲
										P	●	●
										M	o	●
										K	o	●
										N	-	●
										S	-	●
										H	-	-

L

S18P Ø ≥ 17.5 mm

.R

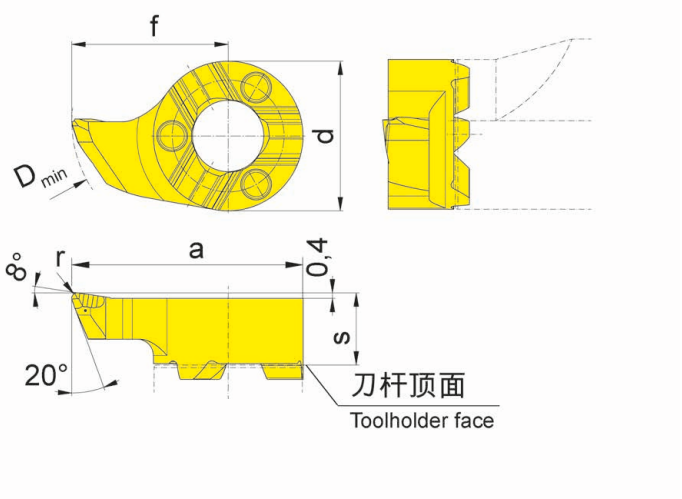

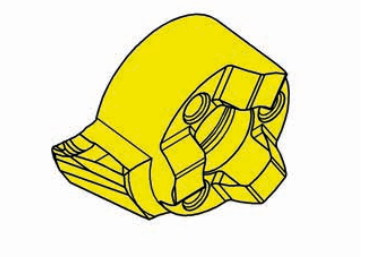

R=右手型-如图
R = right hand version shown

L=左手型
L = left hand version

▲ 库存
on stock

硬质合金牌号
Carbide grades

Δ 4周
4 weeks

产品型号 Part number	s	f	a	r	d	D_{min}	HIS		EG55	TH35
RS18P.1815.R2	5.3	11.5	17	0.2	11	17.5	18P110R		Δ	▲
RS18P.1815.R4	5.3	11.5	17	0.4	11	17.5	18P110R		▲	▲
LS18P.1815.R2	5.3	11.5	17	0.2	11	17.5	18P110L		Δ	Δ
LS18P.1815.R4	5.3	11.5	17	0.4	11	17.5	18P110L		▲	▲
								P	●	●
								M	o	●
								K	o	●
								N	-	●
								S	-	●
								H	-	-

L

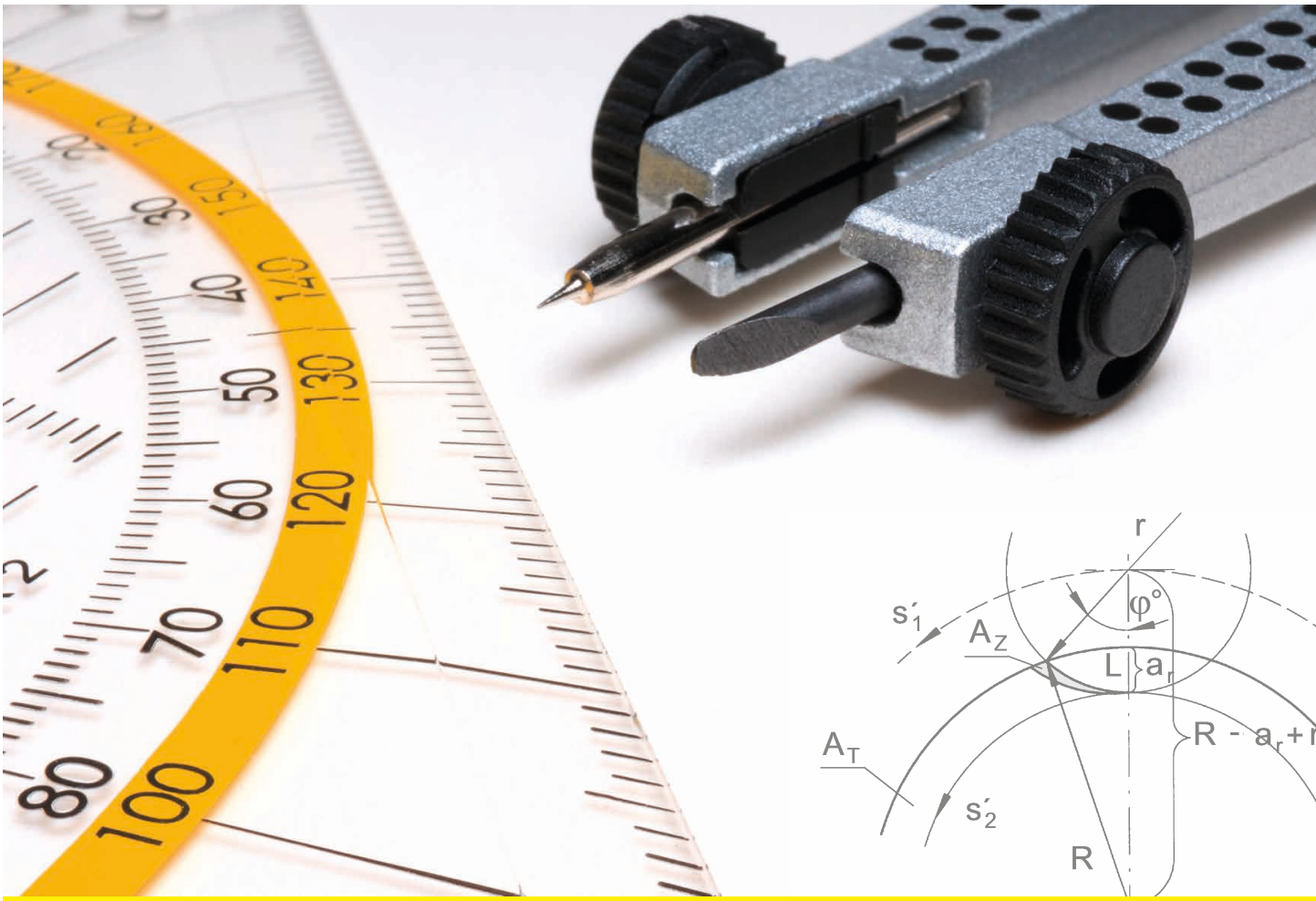

概要/Summary　　页/Page

涂层概览 Coating Overview	350-351
切削参数 Cutting Data	352-357
切削参数 和 槽型 R/L105.BO Cutting Data and Geometries R/L105.BO	358-361
技术信息 Technical Information	362-364
螺钉扭矩 Torque of Screws	365
加工示例 Examples for Machining	366-369
附加设备 Additional Equipment	370-375

涂层概览
Coating Overview

材料组 Material group	涂层方程式 Coating structure	推荐 Recommendation						应用 Application
AN2_ AN4_	AlCrSiN	P05	M05	K05	N05	S05	H05	插削 Broaching
		P10	M10	K10	N10	S10	H10	
		P20	M20	K20	N20	S20	H20	
		P30	M30	K30	N30	S30	H30	
		P40	**M40**	K40	N40			
		P50	**M50**					
TH3_	TiAlN	P05	M05	K05	N05	S05	H05	对于中等进给量，也适用于间断切削 For medium feeds, also suitable for interrupted cuts
		P10	M10	K10	N10	S10	H10	
		P20	M20	K20	N20	S20	H20	
		P30	**M30**	K30	N30	S30	H30	
		P40	**M40**	K40	N40			
		P50	**M50**					
EG3_	AlTiN + TiN	P05	M05	K05	N05	S05	H05	适用于小到中等进给，精加工无断续加工 For small to medium feeds, for finishing without any interruption of the cut
		P10	M10	K10	N10	S10	H10	
		P20	M20	**K20**	N20	S20	H20	
		P30	**M30**	**K30**	N30	S30	H30	
		P40	**M40**	**K40**	N40			
		P50	**M50**					
EG5_	AlTiN + TiN	P05	M05	K05	N05	S05	H05	对于中等进给量，也适用于间断切削 For medium feeds, also suitable for interrupted cuts
		P10	M10	K10	N10	S10	H10	
		P20	M20	**K20**	N20	S20	H20	
		P30	**M30**	**K30**	N30	S30	H30	
		P40	**M40**	**K40**	N40			
		P50	**M50**					
ES1_	AlTiN	**P05**	M05	K05	N05	S05	H05	超精加工和小进给，精加工无断续加工 For superfinishing and small feeds, for finishing without interrupting the cut
		P10	M10	K10	N10	S10	H10	
		P20	M20	K20	N20	S20	H20	
		P30	**M30**	K30	N30	S30	H30	
		P40	**M40**	K40	N40			
		P50	**M50**					
IG3_	TiAlSiN	**P05**	**M05**	**K05**	N05	S05	H05	高切割速度，无断续加工 For high cutting speeds without any interruption of the cut
		P10	**M10**	**K10**	N10	S10	H10	
		P20	**M20**	**K20**	N20	S20	H20	
		P30	**M30**	K30	N30	**S30**	H30	
		P40	M40	K40	N40			
		P50	M50					

涂层概览
Coating Overview

材料组 Material group	涂层方程式 Coating structure	推荐 Recommendation						应用 Application
SG3_	TiAlCrSiN	P05	**M05**	K05	N05	**S05**	H05	适用于小到中等进给，精加工无断续加工 For small to medium feeds, for finishing without any interruption of the cut
		P10	**M10**	K10	N10	**S10**	H10	
		P20	M20	K20	N20	**S20**	**H20**	
		P30	M30	K30	N30	S30	H30	
		P40	M40	K40	N40			
		P50	M50					
TI2_	TiCN	P05	M05	K05	N05	S05	H05	对于小到中等进给量在低切削速度条件下，减少积屑瘤 For small to medium feeds at low low cutting speeds, Reduction of built-up edges
		P10	M10	K10	N10	S10	H10	
		P20	M20	K20	N20	S20	H20	
		P30	M30	K30	N30	S30	H30	
		P40	**M40**	K40	N40			
		P50	M50					
TN3_	TiN	P05	M05	K05	N05	S05	H05	低切削速度，适合断续加工 For low cutting speeds, Suitable for cutting interruptions
		P10	M10	K10	N10	S10	H10	
		P20	M20	K20	N20	S20	H20	
		P30	M30	K30	N30	S30	H30	
		P40	M40	**K40**	N40			
		P50	M50					

ISO 513	P	M	K	N	S	H
韧性 / Tenacity - + / 耐磨性 / Wear resistance - +	05	05	05	05	05	05
	10	10	10	10	10	10
	20	20	20	20	20	20
	30	30	30	30	30	30
	40	40	40	40		
	50	50				

材料 Material			Material-gruppe Material group	硬度 (HB) Hardness Brinell	抗拉强度 R_m [N/mm²] Tensile Strength	材料示例 Example Material
P	碳钢 Carbon steel	~ 0,2 % C	P1.1	125	430	CK15
		~ 0,4% C 退火 annealed	P1.2	190	610	19Mn6
		~ 0,4% C 调质 quenched	P1.3	210	640	36Mn5
		~ 0,6% C 退火 annealed	P1.4	190	610	C55
		~ 0,6% C 调质 quenched	P1.5	300	1000	CK60
		Automatenstahl Free cutting steel	P1.6	220	750	9SMn28
	合金钢 (<5%) Alloyed steel	退火 annealed	P2.1	180	590	100Cr6
		调质 quenched	P2.2	280	960	14NiCr10
		调质 quenched	P2.3	350	1250	34CrMo4
		调质 quenched	P2.4	430	1450	55Cr3
	高合金钢 (>5%) high alloyed steel	退火 annealed	P3.1	200	680	X10CrAl18
		硬化 hardened	P3.2	350	1200	X210Cr2
	铸钢 Cast steel	非合金 unalloyed	P4.1	180	590	GE200
		合金 alloyed	P4.2	220	750	GX40CrSi28
	Sinterstahl Sintered steel	weich soft	P5.1	220	570	Sint-D39
M	不锈钢 Stainless steel	马氏体,铁素体 martensitic ferritic	M1.1	200	680	X16Cr13
		奥氏体 austenitic	M1.2	300	1000	X6CrNiMo-Ti17-12-2
		奥氏体 , 铁素体 austenitic ferritic	M1.3	230	780	X2CrNiMo-N17-13-3
H	淬硬钢 Hardened steels	50-55 HRC	H1.1	-	-	
		55-60 HRC	H1.2	-	-	
		60-63 HRC	H1.3	-	-	
		> 63HRC	H1.4	-	-	

	切削速度 vc (m/min) / 起始值 Cutting speed vc (m/min) / Start values								
	MG12	TN3_	TI2_	TH3_ TF4_	AN2_ RC2_	EG3_ EG5_	IG3_	DD2_	SG3_
	120-16	180 - 16	180 - 16	210 - 16	210 - 16	200 - 16	230-16		230-16
	110-16	170-16	170-16	200-16	200-16	200-16	230-16		230-16
	110-16	160-16	160-16	190-16	190-16	190-16	220-16		220-16
	110-16	150-16	150-16	180-16	180-16	180-16	210-16		210-16
	100-16	120-16	140-16	170-16	170-16	170-16	200-16		200-16
	120-16	160-16	160-16	190-16	190-16	190-16	220-16		220-16
	90 - 16	150 - 16	150 - 16	180-16	180-16	180 - 16	210-16		210-160
	85-16	140-16	140-16	180-16	180-16	180 - 16	210-160		210-160
	80-16	140-16	140-16	180-16	180-16	180 - 16	210-16		210-16
	80-16	140-16	140-16	160-16	160-16	160-16	180-16		180-16
	90-16	90 - 16	90 - 16	140 - 16	140 - 16	120 - 16	140-16		140-16
									140-16
	110-16	180 -16	180 - 16	180 - 16	180 - 16	160 - 16	180-16		180-16
	70-16	170-16		180 - 16	180 - 16	160 - 16	180-16		180-16
		90 - 16		90 - 19	90 - 16	90 - 16	100 - 15		100 - 16
		80 - 16		80 - 16	80 - 16	80 - 16	80 - 16		40 - 16
		60-16		60-16	60-16	60-16	70-16		80-16
							50 - 16		60 - 16
							50 - 16		60 - 16

材料 Material			Material-gruppe Material group	硬度 Hardness Brinell	抗拉强度 R_m [N/mm²] Tensile Strength	材料示例 Example Material
K	灰铸铁 Grey cast iron	低拉伸强度 low tensile strength	K1.1	180	250	GG-25
		高拉伸强度 high tensile strength	K1.2	250	350	GG-40
	球磨铸铁 graphite cast iron	铁素体 ferritic	K2.1	160	400	GGG-40
		珠光体 perlitic	K2.2	260	700	GGG-60
	可锻铸铁 Malleable cast iron	铁素体 ferritic	K3.1	200	400	GTW-45
		珠光体 perlitic	K3.2	260	700	GTS-55-04
	奥氏体球墨铸铁/ADI Ausferritic spheroidal cast iron / ADI	调质 quenched	K4.1	260	800	
		调质 quenched	K4.2	350	1050	
		调质 quenched	K4.3	450	1400	
N	铝合金 Al-alloys	非热处理 not heat treatable	N1.1	30		AlMg1
		热处理 heat treatable	N1.2	100	340	AlMgSi1
	铸铝合金 Al-cast-alloy	< 6% Si	N2.1	80	300	AlMgSi6
		6-10% Si	N2.2	100	320	AlSi7Mg
		10-15 % Si	N2.3	130	450	AlSi12
	铜合金 Copper-alloys	纯铜 Pure copper	N3.1	100	340	Cu
		黄铜,青铜 Bronze Brass	N3.2	90	310	CuZn40Pb
		无铅黄铜 Lead-free brass	N3.3	110	430	CuZn40
		高强度 high strength	N3.4	300	1000	CuZn25Al5-Mn4Fe3
	石墨 Graphite		N4.1			
S	耐热合金(铁基) Heat resistant alloy	退火 annealed	S1.1	200	670	
		硬化 hardened	S1.2	275	930	
	耐热合金 (镍基,钴基) Heat resistant alloy	退火 annealed	S2.1	250	840	Inconel 600
		硬化 hardened	S2.2	350	1200	Inconel 713

	切削速度 vc (m/min) / 起始值 Cutting speed vc (m/min) / Start values								
	MG12	TN3_	TI2_	TH3_ TF4_	AN2_ RC2_	EG3_ EG5_	IG3_	DD2_	SG3_
	90 - 16	150 - 16		160 - 16		160 - 16			
		120 - 16							
	90 - 16	130 - 16							
		100-16		160 - 18		140 - 16			
		130 - 16		180 - 16		160 - 18			
	220 - 16		220 - 16	220 - 16		220 - 16		350 -16	
	220 - 16		220 - 16	220 - 16		220 - 16		350 -16	
	220 - 16		220 - 16	220 - 16		220 - 16		350 -16	
								350-16	
	220 - 16							300 -16	
	220 - 16							300 -16	
	220 - 16							250 -16	
	180 - 16							200 -16	
	50-16						75-16		75 -16
	50-16								
	30-16						40 - 16		40 - 16
	30-16						40 - 16		40 - 16

材料 Material			Material-gruppe Material group	硬度 (HB) Hardness Brinell	抗拉强度 R_m [N/mm²] Tensile Strength	材料示例 Example Material	
S	Titan	钛合金 α Titanium alloy α	S3.1	120	240	Ti99,7	
		钛合金 α-β Titanium alloy α- β	S3.2	360	1200	Ti6Al4V	
		钛合金 β Titanium alloy β	S3.3	410	1400	Ti-10V-2Fe-3Al	
O	热塑性塑料 Thermoplastics		O1.1				
	Duro塑料 Duro plaste		O1.2				
	玻璃纤维增强塑料 Plastics glass fibre reinforced	GFK	O1.3				
	碳纤维增强塑料 Plastics carbon fibre reinforced	CFK	O1.4				

	切削速度 vc (m/min) / 起始值 Cutting speed vc (m/min) / Start values								
	MG12	TN3_	TI2_	TH3_ TF4_	AN2_ RC2_	EG3_ EG5_	IG3_	DD2_	SG3_
	30-16						75 - 16		85-16
	30-16						75 -16		85-16
	30-16						75-16		85-16
	150 - 16								
	150 - 16								
	150 - 16								
	300 - 16								

槽型及进给 - Supermini
Geometries and feed rates - Supermini

槽型 Geometry	材料 Material	进给 f [mm/U] Feed rate f [mm/rev]	加工方式 Machining
.H	P M K N S H	f = 0.04-0.06 ap = 0.15-0.5 mm	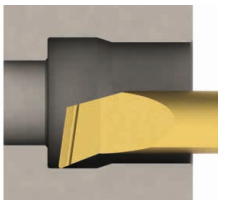
.HV	P M K N S H	f = 0.05-0.1 ap = 0.15-0.5 mm	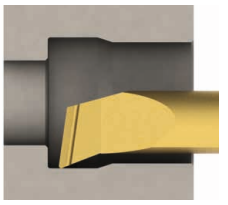
.FB	P M K N S H	f = 0.01-0.04 ap = 0.03-0.05 mm	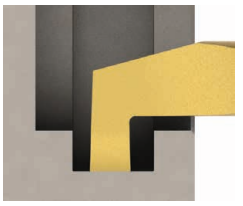
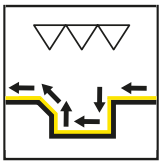	P M K N S H	f = 0.005-0.015 ap = 0.01-0.05 mm	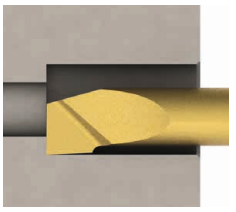

进给 f [mm/U]
Feed rate f [mm/rev]

f = 0.01-0.03

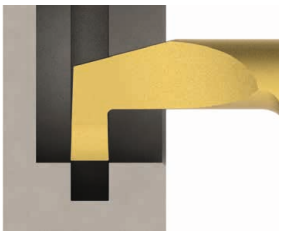

切槽
Grooving

f = 0.02-0.05
ap = 0.15-0.5 mm

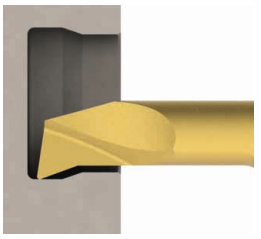

横车
Side Turning

f = 0.02-0.05

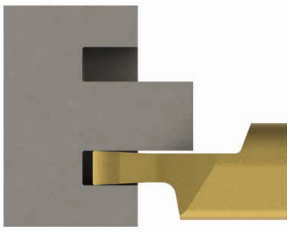

端面槽
Face Grooving

槽型及进给 - Mini
Geometries and feed rates - Mini

槽型 Geometry	材料 Material	进给 f [mm/U] Feed rate f [mm/rev]	加工方式 Machining
.D	P M K N S H	f = 0.03-0.08 ap = 0.2-1.5*	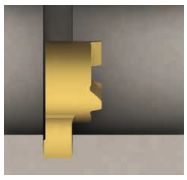
.FB	P M K N S H	f = 0.015-0.05 ap = 0.03-0.07*	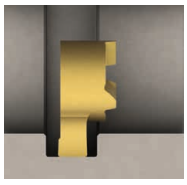
.I	P M K N S H	f = 0.05-0.15 ap = 0.05-0.35	
.R	P M K N S H	f = 0.05-0.15 ap = 0.2-1.75*	

*根据实际工况 / System dependent

进给 f [mm/U]
Feed rate f [mm/rev]

f = 0.01-0.05

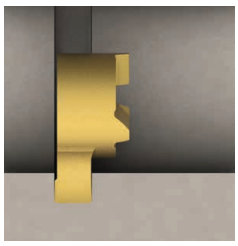

切槽
Grooving

f = 0.03-0.1
ap = 0.1-0.5 mm

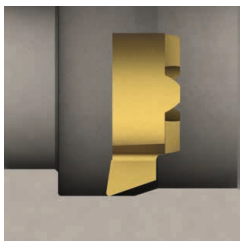

横车
Side Turning

f = 0.01-0.08

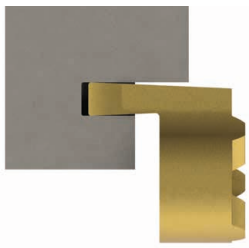

端面槽
Face Grooving

切削参数 R/L105.BO...
Cutting data R/L105.BO...

镗孔钢件 Boring Steel		切深 ap (mm) Depth of cut ap (mm)					
		0.5	1	1.5	2	2.5	3
		进给 f [mm/U] Feed rate f [mm/rev]					
R/L105.BO.30.20.045.1	1.5*D	0.03-0.05	0.02-0.03				
R/L105.BO.30.20.075.1	2.5*D	0.03-0.05	0.02-0.03				
R/L105.BO.40.20.060.1	1.5*D	0.04-0.06	0.04-0.06	0.04-0.06			
R/L105.BO.40.20.100.1	2.5*D	0.04-0.06	0.04-0.06	0.04-0.06			
R/L105.BO.50.20.075.1	1.5*D	0.05-0.08	0.05-0.08	0.04-0.07	0.04-0.07		
R/L105.BO.50.20.125.1	2.5*D	0.05-0.08	0.05-0.08	0.04-0.07	0.04-0.07		
R/L105.BO.60.20.090.1	1.5*D	0.07-0.1	0.07-0.1	0.07-0.1	0.07-0.1	0.05-0.08	
R/L105.BO.60.20.150.1	2.5*D	0.07-0.1	0.07-0.1	0.07-0.1	0.07-0.1	0.05-0.08	
R/L105.BO.70.20.105.1	1.5*D	0.08-0.1	0.07-0.1	0.07-0.1	0.07-0.1	0.07-0.08	0.05-0.07
R/L105.BO.70.20.175.1	2.5*D	0.08-0.1	0.07-0.1	0.07-0.1	0.07-0.1	0.07-0.08	0.05-0.07

不锈钢材料的进给速率:选择最小值 .
Feed rates for stainless materials: Select minimum values.

钻孔钢件 Drilling Steel		进给 f [mm/U] Feed rate f [mm/rev]
R/L105.BO.30.20.045.2	1.5*D	0.01-0.02
R/L105.BO.30.20.075.2	2.5*D	0.01-0.02
R/L105.BO.40.20.060.2	1.5*D	0.01-0.02
R/L105.BO.40.20.100.2	2.5*D	0.01-0.02
R/L105.BO.50.20.075.2	1.5*D	0.02-0.04
R/L105.BO.50.20.125.2	2.5*D	0.02-0.04
R/L105.BO.60.20.090.2	1.5*D	0.03-0.05
R/L105.BO.60.20.150.2	2.5*D	0.03-0.05
R/L105.BO.70.20.105.2	1.5*D	0.03-0.05
R/L105.BO.70.20.175.2	2.5*D	0.03-0.05

对于钻孔，我们推荐通用几何槽型
For drilling we recommend the universal geometry

槽型 R/L105.BO...
Geometries R/L105.BO...

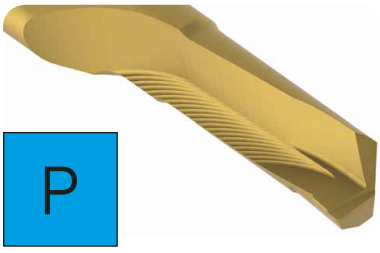

R/L105.B0...1

几何槽型与断屑器更好的切屑控制

-车削大进给
-适用于一般钢材
-具有高进给量的修光切削刃
-更好的切屑控制
-一般钢的钻孔
-以过程可靠性为目标的困难应用
-也适用于长屑材料

Geometry with chipbreaker for better chip control

- Turning with large infeeds
- For general steels
- With trailing cutting edge for higher feeds
- Better chip control
- Drilling in general steels
- For problematic applications with the aim of process reliability
- Also for long-chipping materials

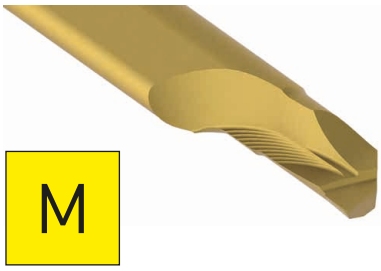

R/L105.B0...2

通用槽型

-车削大进给
-易于切削的通用槽型，也适用于不锈钢
-具有高进给量的修光切削刃
-更小的切削压力，甚至适用于薄壁部件
-用于钢件和有色金属的钻孔

Universal geometry

- Turning with large infeeds
- Easy cutting universal geometry also for stainless steels
- With trailing cutting edge for higher feeds
- Less cutting pressure, suitable even for thin-walled components
- For drilling in steel and non-ferrous metals

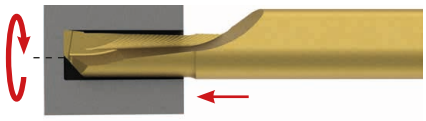

实体钻孔并可得到平底
Drilling into the solid and achieving a flat hole bottom

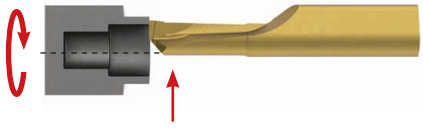

车端面
Turning of face profiles

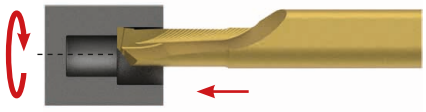

车内孔
Turning of internal profiles

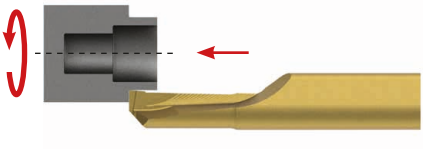

车外圆
Turning of external profiles

螺纹
所有螺旋角最大达4.5°的螺纹都可以用HORN标准螺纹刀片加工。不需要非标刀片。

刀片座
Mini和Supermini®的刀片座保证了这些工具的精确中心高度。尽管如此，请始终检查中心高度，因为差异可能会导致问题，特别是在加工小直径时。

排屑
请选择切削宽度较小的刀片，这样有利于排屑，有利于切屑从刀具旁边的孔中流出。为了避免卡在刀片上，使用啄进进行切槽。

冷却液
使用过滤过的冷却剂将切屑排出并冷却刀片本身。建议冷却液压力为10bar最小.

Threading
All threads up to 4,5 ° helix angle can be manufactured with HORN standard threading inserts. No special anvils will be necessary.

Seatings
Seatings of Mini as well as of Supermini® guarantee the accurate centre height of these tools. In spite of this please always check centre height because a difference may cause problems especially when machining small diameters.

Removal of chips
Please choose inserts with small cutting widths, which helps chips evacuation and chip flow out of the bore beside the tool. To avoid jam of chips use the technique to groove by steps.

Coolant
Use a filtered coolant for transporting the chips out and for cooling the insert itself. A coolant pressure of 10 bar min. is recommended.

	钢 (Nmm² 拉伸强度) Steel (N/mm² Tensile strength)					不锈钢 Stainless steel	灰铸铁 Grey cast iron	铝 Aluminium
	400-500	500-700	700-850	850-1150	> 1150			
V_{max} m/min	160	140	120	90	70	90	100	300

螺距 Pitch		走刀次数 Number of passes							
		钢 (Nmm² 拉伸强度) Steel (N/mm² Tensile strength)					不锈钢 Stainless steel	灰铸铁 Grey cast iron	铝 Aluminium
mm	Gg/'' tpi	400-500	500-700	700-850	850-1150	> 1150			
0.8	32	10	10	12	12	14	14	12	10
1.0	24	13	13	15	15	18	18	15	13
1.25	20-19	16	16	19	19	22	22	19	16
1.5	16	20	20	23	23	27	27	23	20
1.75	14	23	23	27	27	31	31	27	23
2.0	12-11	27	27	30	30	36	36	30	27
2.5	10	33	33	38	38	45	45	38	33
3.0-3.5	8	40	40	46	46	54	54	46	40

上表中推荐的走刀次数是近似值.
请注意:
-为避免切削刃破损,切割深度不宜过深
-精加工(零切深)不被考虑在表中

The recommended number of passes in the above table are approximate figures.
Please note:
- to avoid breakages at the cutting edge, the depth of cut at the first pass should not be too deep
- finishing passes (with zero depth of cut) are not considered in the table

内螺纹进给方向
Feed direction internal threading

右手螺纹
Right hand thread

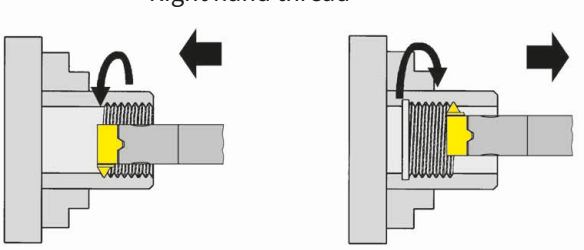

右手刀杆
Insert right hand

左手刀杆
Insert left hand

左手螺纹
Left hand thread

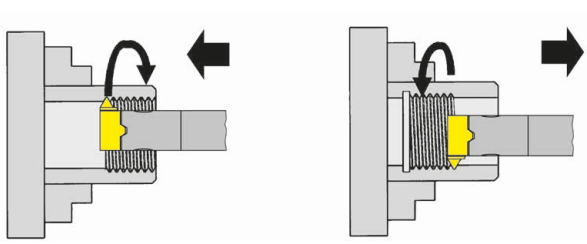

左手刀杆
Insert left hand

右手刀杆
Insert right hand

进给
In-Feed

径向进给
同时切削刀片两边的材料,这是加工螺纹时最普通的方法.

Radial In-Feed
Metal removed on both sides of the insert simultaneously. The most commonly used method for thread production.

改进的侧进给
更小的后刀面磨损和相应的工件侧面上的更好的表面光洁度..

Modified flank in-feed
Less wear of the trailing edge and better surface finish on corresponding flank.

变化的后刀面进给
两个刃都被充分利用,意味着刀片寿命更长.

Alternating flank in-feed
Both edges are being fully utilized which means longer tool life.

后刀面进给
更好的断屑和散热.

Flank in-feed
More easily formed chip and better heat dissipation.

螺钉扭矩
Torque of Screws

以下扭矩适用于刀片的螺钉,我们建议对螺钉不要额外使用润滑剂(如铜膏)

Following torques are allowed for screws of inserts. We recommend to use no additionel gliding means (such as copper paste) for screws.

型号 type	螺钉 Screw	M_d Nm	夹紧扳手 Wrench	刀板 Blade
001	8.075.1835	**5**	SW4DIN911	DSW40K
125	3.512T10EP	**3**	T10PL	DT10PK
145	5.13T20EP	**6.5**	T20PQ	DT20PK / DT20PQ
962	6.075T15P	**5**	T15PQ	DT15PK
963	6.075T15P	**5**	T15PQ	DT15PK
AIH	030.3509.T15P 6.075T15P	**2.5** **5**	T10PL T15PQ	DT10PK DT15PK
B10P	2.6.5T8EP	**1.2**	T8PL	DT8PK
B11P	3.10T9P	**1.8**	T9PL	DT9PK
B18P	5.13T20EP	**6**	T20PQ	DT20PK / DT20PQ
B105	6.075T15P	**5**	T15PQ	DT15PK
B105.00...A...	030.00M8.1188	**4**	T25PQ	DT25PK / DT25PQ
B105.00...S...	030.0000.1157	**2**	T15PL	DT15PK
B105.A022...	030.0422T10P	**2**	T10PL	DT10PK
B106	1.8.4T6EP	**0.9**	T6PL	DT6PK
B107	2.2.5T7EP	**1.1**	T7PL	DT7PK
B108	2.6.5T8EP	**1.2**	T8PL	DT8PK
B109	6.075T15P	**5**	T15PQ	DT15PK
B110	6.075T15P	**5**	T15PQ	DT15PK
B111	3.512T10EP	**3**	T10PL	DT10PK
B114	4.12T15EP	**5**	T15PQ	DT15PK
B116	5.13T20EP	**6.5**	T20PQ	DT20PK / DT20PQ
BA114	4.12.T15P	**5**	T15PQ	DT15PK
BGT001	DIN912M5x10	**5**	SW4DIN911	DSW40K
BGT001.C...	DIN912M5x14	**5**	SW4DIN911	DSW40K
BKT	6.075T15P	**5**	T15PQ	DT15PK
BKT105...S...	030.0000.1157	**2**	T15PL	DT15PK
BU105	6.075T15P	**5**	T15PQ	DT15PK
BU105.00...S...	030.0000.1157	**2**	T15PL	DT15PK
H105	6.075T15P	**5**	T15PQ	DT15PK
HC105	6.075T15P	**5**	T15PQ	DT15PK
HC114	4.12T15EP	**5**	T15PQ	DT15PK
IR105	6.075T15P	**5**	T15PQ	DT15PK
KC760	5.12.T20P	**6**	T15PQ	DT15PK
N	6.075T15P	**5**	T15PQ	DT15PK
VDI	6.075T15P	**5**	T15PQ	DT15PK
WFB...105	6.075T15P	**5**	T15PQ	DT15PK
WFB...110	6.075T15P	**5**	T15PQ	DT15PK
WFB...14	4.12T15EP	**5**	T15PQ	DT15PK

105系列刀片

使用全半径旋转刀片去十字孔毛刺

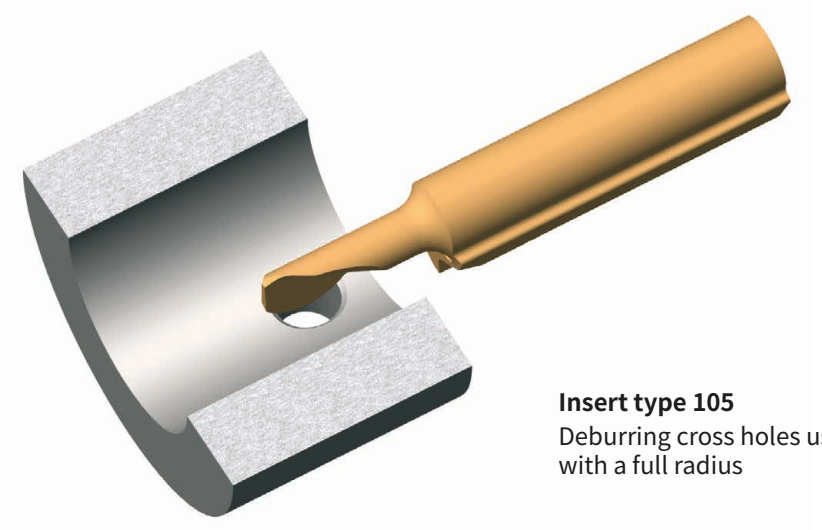

Insert type 105
Deburring cross holes using a rotating insert with a full radius

105系列刀片

仿形端面槽(全半径刀片)

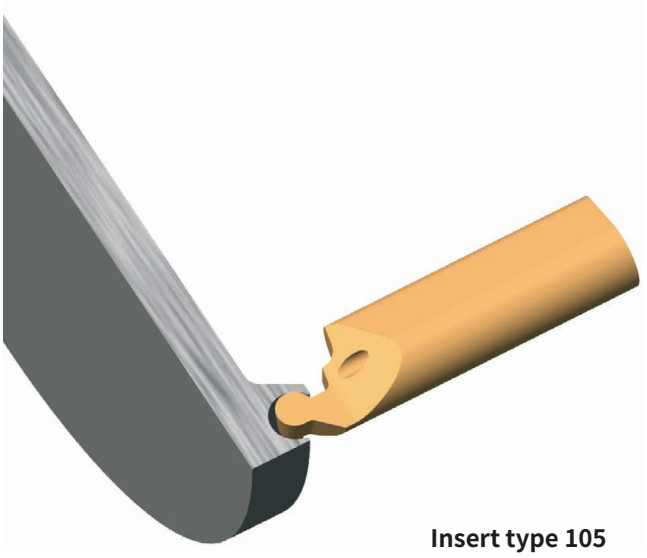

Insert type 105
Profiling a face groove (full radius insert)

105系列刀片

加工有退刀槽的平底孔

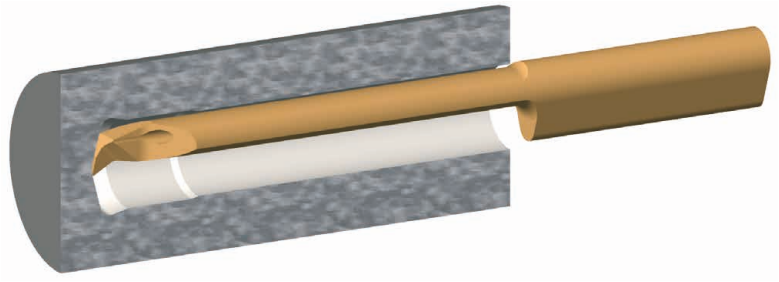

Insert type 105
Machining a flat bottom hole with an undercut

105系列刀片

燕尾端面槽的加工

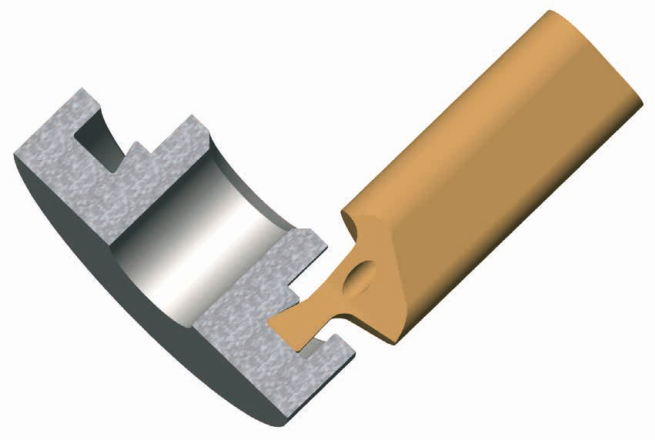

Insert type 105
Machining of a dovetail face groove

108系列刀片

特殊角度退刀槽加工

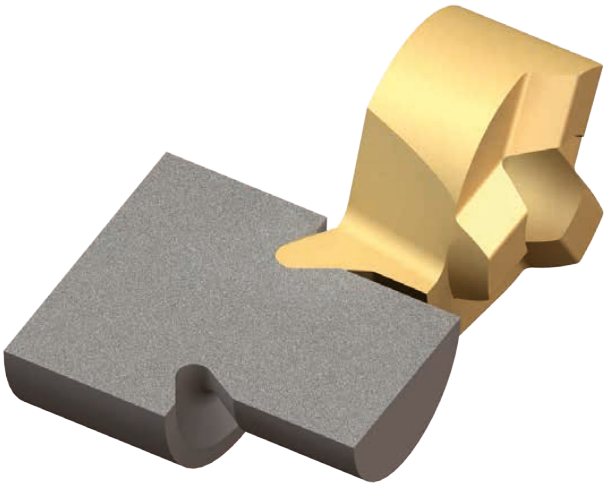

Insert type 108
Special angled under-cut relief

111系列刀片

特殊的内径成型槽和端面

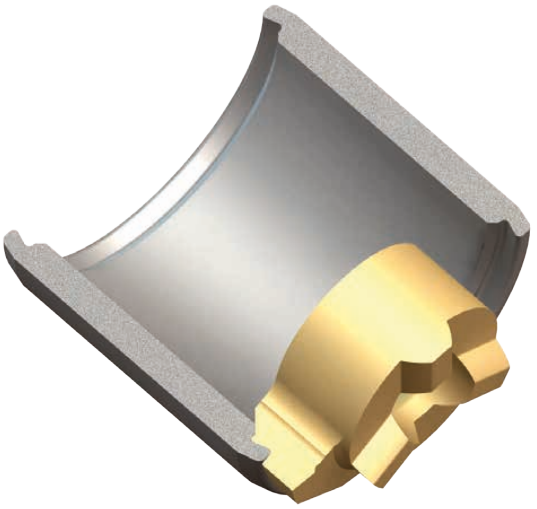

Insert type 111
Special ID form groove and facing

加工示例
Example for Machining

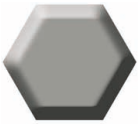

插削“六角”
Broaching "Hexagon socket"

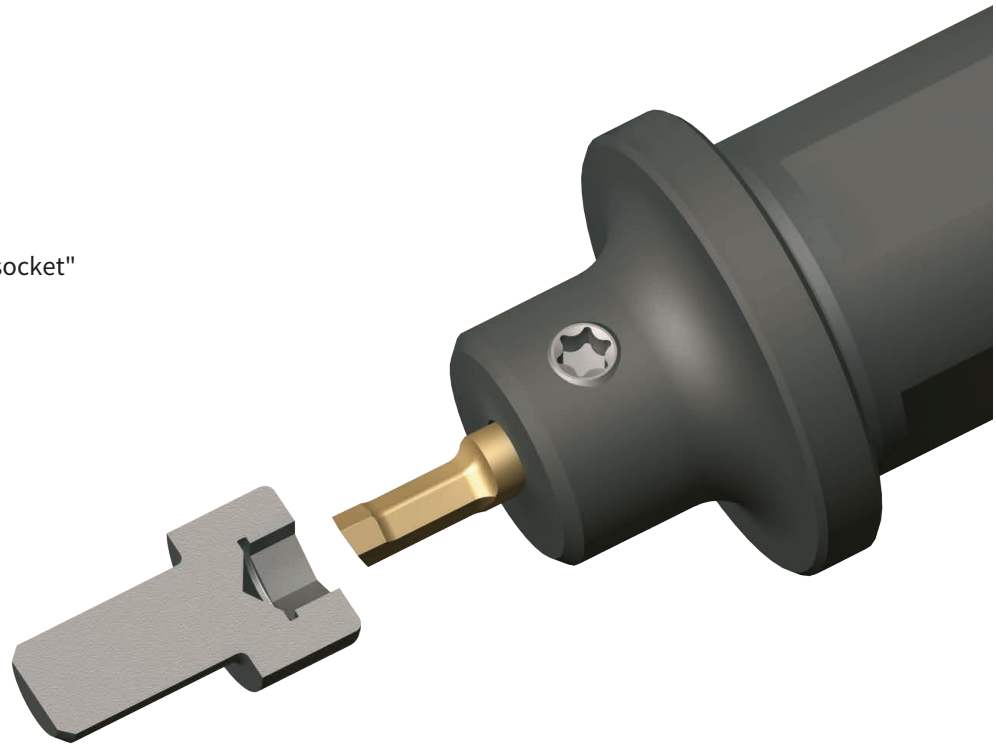

插削 "Torx"
Broaching "Torx"

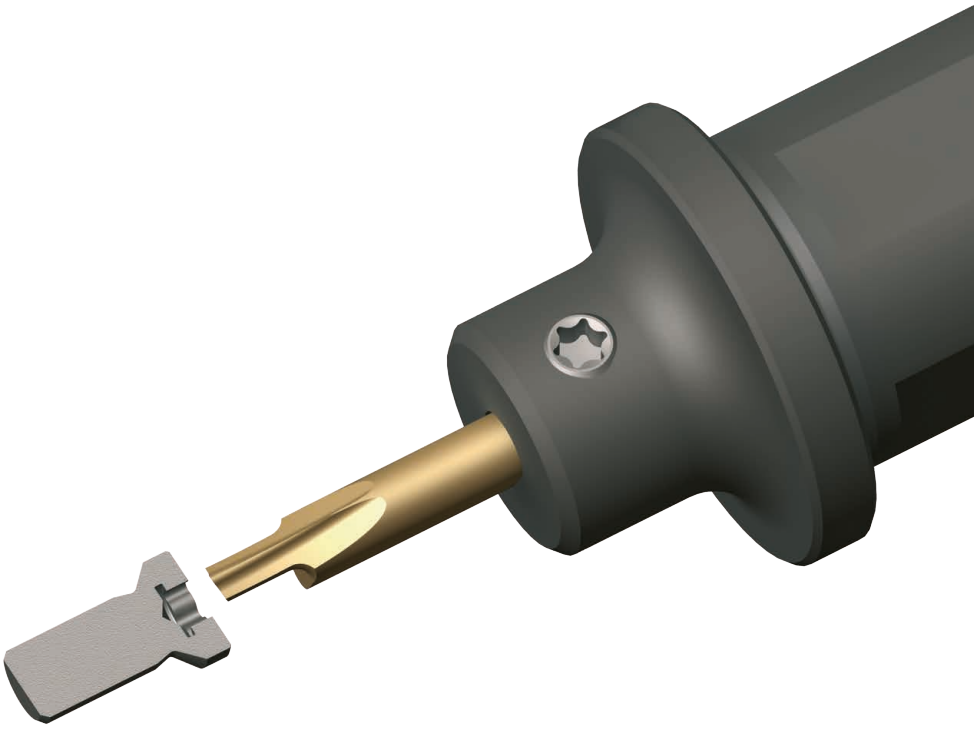

了解更多信息，请参阅HORN产品目录“切槽和插削”

For further information please see the HORN catalogue "GROOVING AND BROACHING"

D 041 VL

0.4-1 Nm

带刻度的扭矩扳手
-扭矩可调
-屏幕显示调整扭矩

扭矩无极调节，符合人体工程学的多组件手柄，轻而紧凑的设 计，当达到设定扭矩时单击信号按钮。
(标准: EN ISO 6798, BS EN 26789, ASME B 107.14.M.)
(精度: ± 6 %)

D 15 VL

1-5 Nm

Torque screw driver with scale
- variable torque setting
- adjusted torque is shown on display

The Torque can be adjusted with a special torque setter (included).
Handle: Ergonomical form gives perfect handling abilities.
Audible signal when set torque is reached.
Standard: EN ISO 6798, BS EN 26789, ASME B 107.14.M.
Precision: ± 6 %

D 28 VL

2-7 Nm

ED 28 VL

配 / for
D041VL / D15VL / D28VL

设定扭矩的设备

柄部：醋酸纤维材质，表面为细微结构
刃部：八角形，硬化处理，镀锌

Device for setting the required torque

Handle: Celluloseacetat with micro structured surface
Blade: Octogonal (8 flats) blade, hardened galvanized

D515QL

5-14 Nm

带刻度的扭矩扳手
-扭矩可调
-屏幕显示调整扭矩

扭矩无极调节，符合人体工程学的多组件手柄，轻而紧凑的设 计，当达到设定扭矩时单击信号按钮。
(标准: EN ISO 6798, BS EN 26789, ASME B 107.14.M.)
(精度: ± 6 %)

Torque screw driver with scale
- variable torque setting
- adjusted torque is shown on display

The Torque can be adjusted with a special torque setter (included).
Handle: Ergonomical form gives perfect handling abilities.
Audible signal when set torque is reached.
Standard: EN ISO 6798, BS EN 26789, ASME B 107.14.M.
Precision: ± 6 %

ED515QL

配 / for
D515QL

扭矩调整扳手

柄部: 纤维素乙酸酯微观结构表面
刃部: 8角形状,经过硬化处理，镀铬.

Device for setting the required torque.

Handle: Celluloseacetat with micro structured surface
Blade: Octogonal (8 flats) blade, hardened galvanized

DT6PK
DT7PK
DT8PK
DT9PK
DT10PK
DT15PK
DT20PK
DT25PK
配 / for
D041VL / D15VL / D28VL

Plus

扳手刀头配 TORX PLUS® 螺钉

刀头: 高品 质铬 钒钢，经过硬 化处理，镀铬。
Wiha镀铬刀片保证了最好的精密度。
使用深绿色代码
应用: 使用给定的扭紧扭矩，结合一个Wiha扭矩扳手。

Blade for TORX-Plus® screws

Blade: High quality Chrome-Vanadium steel, through hardened, chrome plated.
Wiha Chrome Blade guarantees maximum precison. Colored code dark green
Utilization: Controlled screw setting with definite torque in combination with Wiha torque screw driver handle.

DT6K
DT8K
DT15K
配 / for
D041VL / D15VL / D28VL

刀头-Torx螺钉

刀头： 高品质铬钒钢，硬化处理，镀铬
Wiha镀铬刀头保证了最好的精密度。
颜色代码为绿色
用途： 拧紧螺钉到指定扭矩，和Wiha扭矩扳手刀柄组合。

Blade for Torx screws

Blade: High quality Chrome-Vanadium steel, through hardened, chrome plated.
Wiha Chrome Blade guarantees maximum precison. Colored code dark green
Utilization: Controlled screw setting with definite torque in combination with Wiha torque screw driver handle.

DT15PQ
DT20PQ
DT25PQ
DT27PQ
DT30PQ
配 / for
D515QL

Plus

扳手刀头配 TORX PLUS® 螺钉

刀头: 高品 质铬 钒钢，经过硬 化处理，镀铬。
Wiha镀铬刀片保证了最好的精密度。
使用深绿色代码

应用: 使用给定的扭紧扭矩，结合一个Wiha扭矩扳手。

Blade for TORX-Plus® screws

Blade: High quality Chrome-Vanadium steel, through hardened, chrome plated. Wiha Chrome Blade guarantees maximum precison. Colored code dark green

Utilization: Controlled screw setting with definite torque in combination with Wiha torque screw driver handle.

DSW15K
DSW20K
DSW25K
DSW30K
DSW40K
配 / for
D041VL / D15VL / D28VL

DSW50K
DSW60K
配 / for
D15QL

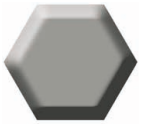

扳手刀头-内六角螺钉

刀头： 高品质的铬钒钢，硬化处理，镀铬。
Wiha镀铬刀片保证了最好的精密度。
使用红色代码

应用： 使用给定的扭紧扭矩，结合一个Wiha扭矩扳手。

Blade for allen screws

Blade: High quality Chrome-Vanadium steel, through hardened, chrome plated.
Wiha Chrome Blade guarantees maximum precison. Colored code red

Utilization: Controlled screw setting with definite torque in combination with Wiha torque screw driver handle

D14ZBK
配 / for
D041VL / D15VL / D28VL

通用钻套
也用于所有的C6.3和E6.3(1/4")钻头

刀头：高品质铬钒钢，经过硬化处理，镀铬。
刀颈：不锈钢
应用：用于固定扭矩，扭矩标与柄部。

Universal Bitholder for C6,3 and E6,3 (1/4") Bits

Blade: High quality Chrome-Vanadium steel, through hardened, chrome plated.
Collar: Stainless steel
Utilization: For controlled screw setting with definite torque in combination with torque screw driver handle.

D14ZBQ
配 / for
D515QL

通用钻套
也用于所有的C6.3和E6.3(1/4")钻头

刀头：高品质铬钒钢，经过硬化处理，镀铬。
刀颈：不锈钢
应用：用于固定扭矩，扭矩标与柄部。

Universal Bitholder for C6,3 and E6,3 (1/4") Bits

Blade: High quality Chrome-Vanadium steel, through hardened, chrome plated.
Collar: Stainless steel
Utilization: For controlled screw setting with definite torque in combination with torque screw driver handle.

14ZQK

通用T型刀柄的钻套
也用于所有的C6.3和E6.3(1/4")钻头

刀头: 高品质铬钒钢,经硬化处理,镀铬
刀颈: 不锈钢
应用: 开关控制

Universal Bitholder with T-handle for C6,3 and E6,3 (1/4") Bits

Blade: High quality Chrome-Vanadium steel, through hardened, chrome plated.
Collar: Stainless steel
Utilization: For controlled opening

T6PW
T7PW
T8PW
T9PW
T10PW
T15PW
T20PW
T25PW
T30PW

Plus

TORX PLUS® 螺钉扳手

应用: 适用于各种使用TORX PLUS®螺钉
注意: TORX PLUS®-扳手不适用于 Torx-螺钉

Wrench for TORX PLUS® Screws

Utilization: For all kind of using TORX PLUS® Screws

Attention: TORX PLUS®-Wrench does NOT fit for Torx-Screws

Index

型号 Type	页 Page
001C	72
105	74-133, 136-138, 142-143,
106	193-195
107	201-205
108	211-213, 215-217, 219, 221-225, 228-229
109	150-164,
10P	236, 238, 240, 242-244
110	178-184
111	251-253, 255-256, 258, 260-265, 268-269
116	325-327, 329-331, 333-336, 339-340
11P	276, 278-279, 281, 283-285
125	250
145	324
962	38
963	39
A105	140-141
A109	166
A110	187-188
AIH	40
B105	16, 19, 21, 23-30, 33-34, 64, 134, 139
B105C	68-69, 135
B105TS	70-71
B106	192
B107	200
B108	210
B109	148-149, 165
B10P	234-235
B110	170-171, 186

型号 Type	页 Page
B110C	173-174
B110TS	172
B111	248-249
B116	322-323
B11P	274-275
B18P	344
BGT	44-45, 47-48
BKT	46, 49-50
BU105	17, 20, 22
G	51
H105	35
HC105	36-37, 41
HF.N	65-66
IR105	31-32
KC760	43
L760	42
N	54-60, 176
S108	214, 218, 220, 226-227
S10P	237, 239, 241
S111	254, 257, 259, 266-267
S116	328, 332, 337-338
S11P	277, 280, 282
S18P	345, 347-348
VDI	67, 175
WFB.105	73
WFB.110	177
Z	52

找到您合适的刀具解决方案.
FIND YOUR RIGHT
TOOLING SOLUTION NOW.

horn-group.com

DEUTSCHLAND, STAMMSITZ
GERMANY, HEADQUARTERS
—
Hartmetall Werkzeugfabrik
Paul Horn GmbH
Horn-Straße 1
72072 Tübingen

Tel +49 7071 7004-0
Fax +49 7071 72893

info@de.horn-group.com
horn-group.com

KMINI100CE, 09/2023