铣削系统

MILLING SYSTEMS

2023 / 2024

探索 HORN
EXPLORE HORN

尊敬的HORN用户

卓越的结果总是最佳的加工工艺和完美的工具的结合。为了实现这一目标，HORN结合了先进的技术、性能和可靠性。从单个零件到批量生产，适用于标准或特殊应用:我们的工具为您提供快速，经济，高质量的解决方案。为了帮助您选择切削参数，我们目录中的表各自提供了经过验证的经验值。充分利用我们办公室职员和销售工程师的专业知识。

可持续发展是我们企业理念的核心部分。这就是为什么我们一直关注产品和生产的质量保证、环境保护、能源效率和安全。作为高效可靠的工具合作伙伴，我们确信您与我们一起创造一个创新和强大的经济未来。

Markus Horn
首席执行官
Paul Horn GmbH

Matthias Rommel
首席执行官
Paul Horn GmbH

Explore HORN

Exceptional results are always a combination of the optimum cutting process and the perfect tool. To achieve this, HORN combines advanced technology, performance and reliability. From single part to series production, for standard or special applications: Our tools offer you fast, economical, high quality solutions. To assist you when choosing cutting parameters, our tables in the respective catalogue provide proven empirical values. Take advantage of the expertise of our office staff and sales engineers.

Sustainability is a central part of our corporate philosophy. That is why we have always focused on quality assurance, environmental protection, energy efficiency and safety with regard to our products and our production. As an efficient and reliable tool partner, we make sure that you join us in an innovative and strong economic future.

Markus Horn
CEO
Paul Horn GmbH

Matthias Rommel
CEO
Paul Horn GmbH

摘要 / Index

A	**DC系列 整体硬质合金槽铣刀和螺纹铣削** System DC Solid Carbide Groove and Thread Milling Cutter	
B	**槽铣削(圆弧插补铣削)** Groove Milling by circular interpolation	**M304/M306/M308/M311/ M116/M313/M328/M332/M335**
	平面和高进给铣削 Face and High Feed Milling	**M620**
C	**槽铣削** Groove Milling	**M275**
D	**槽铣削** Groove Milling	**380/381**
E	**槽铣削** Groove Milling	**M101**
F	**槽铣削** Groove Milling	**382/383/M310**
G	**螺纹铣削** Thread Milling	**M275/M306/M308/M311 M313/M328/M332/380**
H	**技术说明 槽铣削和圆弧铣削** Technical Instructions Groove and Circular Milling	
I	**齿轮加工** Gear Machining	
J	**T型槽铣削** Milling of T-Slots	**M311/M313/M328/M406 M409**
K	**多边形铣削** Polygon Millling	**M275/381**
L	**刀具系列 DA / DAH 高进给铣削** System DA / DAH High Feed Milling	
M	**立装铣削** Tangential Milling	**M406/M409/M610**

一般信息
General Information

- 除非另有说明，所有尺寸均以毫米为单位。
  All dimensions in mm, unless otherwise noted
- 可根据要求订制更多尺寸和形式。
  Further dimensions and versions are available on request.
- 锁紧螺扭矩规格，请见技术说明。
  For torque specification of the screw, please see "Technical Instructions".
- 所有刀片座损坏的刀杆都可以由HORN维修。
  All carbide milling shanks with damaged seating can be repaired by HORN.
- 交货期 / Delivery times
  - ▲ 库存 / on stock
  - Δ 4周 / 4 weeks
- 根据被加工材料组 / Use for material groups
  - • 推荐 / recommended
  - o 次推荐 / alternative recommended
  - - 不合适 / not suitable

HORN连接接口代码-需要它做什么？

连接接口代码确保您将始终找到适当的工具，并显示在刀杆和刀片上。如果代码匹配，则可以在相应的刀杆中使用该刀片。
这也适用于我们的模块化支架系统，其中连接代码表示刀柄和刀夹之间的接口。

The HORN connection interface code - what is it needed for?

The connection interface code ensures that you will always find the appropriate tools and is shown on toolholders and inserts. If the codes match, the insert can be used in the corresponding toolholder.
This also applies to our modular holder system, where the connection code indicates the interface between the holder and the cassette.

HORN连接接口代码及可能的组合:
HORN connection interface codes and possible combinations:

HIS = 刀片座 / Insert seat
HWS = 工件侧接口 / Interface workpiece side
HMS = 机床侧接口 / Interface machine side

HIS	⟷	**HWS**
HMS	⟷	**HWS**

刀片示例
Example insert

产品型号 Part number	Ds	Nw	w	s	s_1	t_{max}	Z	HIS	TA45
306.0050.10.00	9,7	0,5	0,57	3,4	3,2	0,85	3	306060R	▲

刀杆示例
Example toolholder

产品型号 Part number	d	l_1	形式 Form	HWS
M306.0707.03A	7,5	100	A	306060R • 306060L

摘要 / INDEX

应用概览
Overview Application

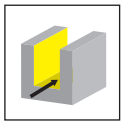

槽铣削
Groove milling

槽铣削
Full radius groove milling

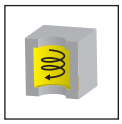

圆弧槽
Circular groove

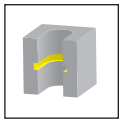

内孔槽铣削
Internal groove milling

卡簧槽
Circlip groove

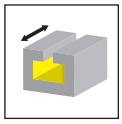

DIN650T型槽
T-Slots DIN650

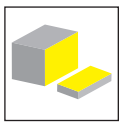

槽铣削
Slot milling

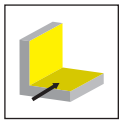

倒角铣削
Corner milling

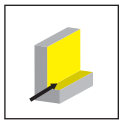

轮廓修饰
Trimming

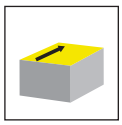

平面铣削
Face milling

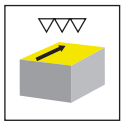

精加工
Finishing

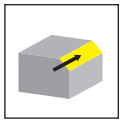

倒角
Chamfering

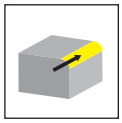

圆角铣削
Radius milling

内孔铣削
Bore milling

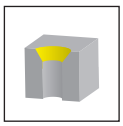

倒角铣削
Chamfer milling

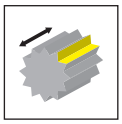

齿轮铣削
Gear milling

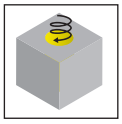

螺旋插补铣
Helical interpolation

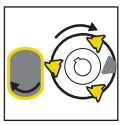

多边形铣削
Polygon milling

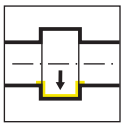

内孔切槽
Internal grooving

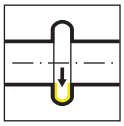

内孔切圆槽
Internal grooving full radius

镗内孔及切槽倒角
Internal boring and grooving chamfer

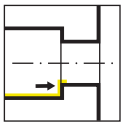

内孔背车
Internal back turning

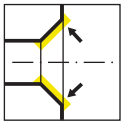

内孔倒角
Internal chamfering

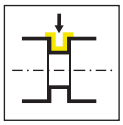

外径切槽
External grooving

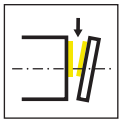

切断
Parting off

内冷
Internal coolant

应用概览
Overview Application

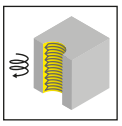

螺纹铣削 内圆
Thread milling internal

半牙螺纹
Partial profile thread

全牙螺纹
Full profile thread

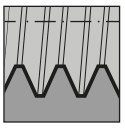

内孔螺纹
Internal thread

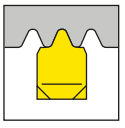

惠氏螺纹
Whitworth thread

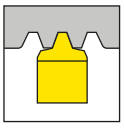

梯形螺纹
Trapezoidal thread

BSW
BSF

BSW/BSF 螺纹
Whitworth pipe thread BSW/BSF

NPT
NPTF

NPT 螺纹
National pipe thread

45°

主偏角 45°
Approach angle 45°

60°

米制ISO螺纹
Metric ISO thread
主偏角 60° (径向铣削)
Approach angle 60° (Chapter Tangential Milling)

UN

UN螺纹
Unified thread

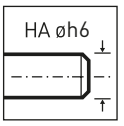

刀杆形式
Shank form

z3

齿数
Numbers of teeth

.3

槽型 .3
Geometry

.40

槽型 .40 铝加工
Geometry .40 for aluminium

.E

槽型 .E
Geometry

.FY

槽型 .FY
Geometry

DC

整体硬质合金立铣刀系列 DC

- 螺纹铣刀-非全牙型
- 螺纹铣刀-全牙型
- 槽铣削
- 倒角铣削

Solid Carbide End Mills System DC

- Thread milling partial profile
- Thread milling full profile
- Groove milling
- Chamfer milling

槽铣削和螺纹铣削
Groove milling and thread milling

螺纹铣刀
Thread Milling Cutter
DCG

页/Page
13-14

页/Page
15

页/Page
16

页/Page
17

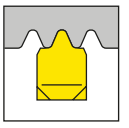
页/Page
18

槽铣刀
Groove milling cutter
DCR/DCN/DCX

页/Page
19

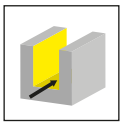
页/Page
20-21

铣削倒角刀
Chamfer Milling Cutter
DCF

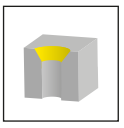
页/Page
22

切削参数
Cutting data

页/Page
23-25

螺纹铣刀
Thread Milling Cutter

DCG

z3 60°

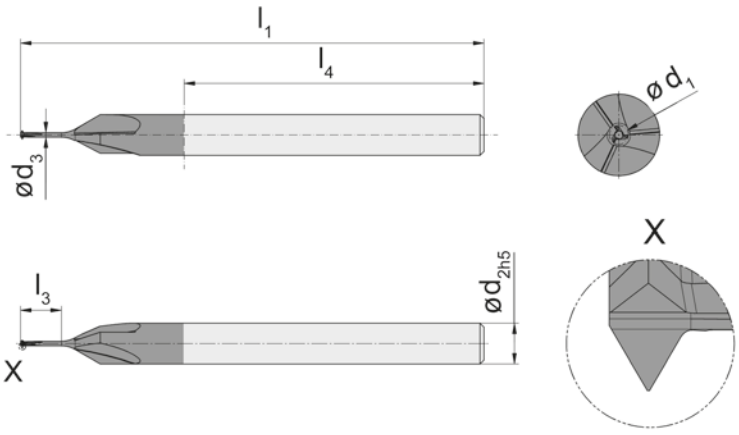

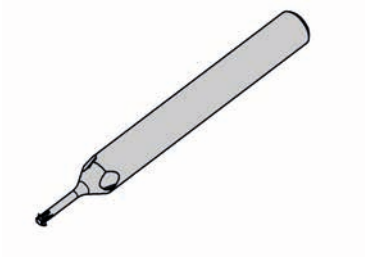

硬质合金牌号
Carbide grades

▲ 库存 on stock　　Δ 4周 4 weeks

产品型号 Part number	螺纹 Thread	D_{min}	Z	P	d_1	d_2	d_3	l_1	l_3	l_4		ES15
DCG.3.M1.025.2.1.03	M1	0.75	3	0.25	0.7	3	0.33	34	3	22		▲
DCG.3.M11.025.2.1.03	M1,1	0.8	3	0.25	0.75	3	0.4	34	2.75	22		Δ
DCG.3.M12.025.2.1.03	M1,2	0.9	3	0.25	0.8	3	0.43	34	3	22		▲
DCG.3.M14.030.2.1.03	M1,4	1.1	3	0.3	1	3	0.43	34	4	22		▲
DCG.3.M16.035.2.1.03	M1,6	1.2	3	0.35	1.1	3	0.53	34	4	22		▲
DCG.3.M2.040.2.1.03	M2	1.7	3	0.4	1.5	3	0.93	34	6	22		▲
DCG.3.M22.045.2.1.03	M2,2	1.9	3	0.45	1.7	3	1.13	34	6	22		▲
DCG.3.M25.045.2.1.03	M2,5	2.2	3	0.45	2	3	1.3	34	8	22		▲
											P	●
											M	o
											K	●
											N	-
											S	-
											H	-

螺纹铣刀
Thread Milling Cutter

DCG

z3 | 60° | z4

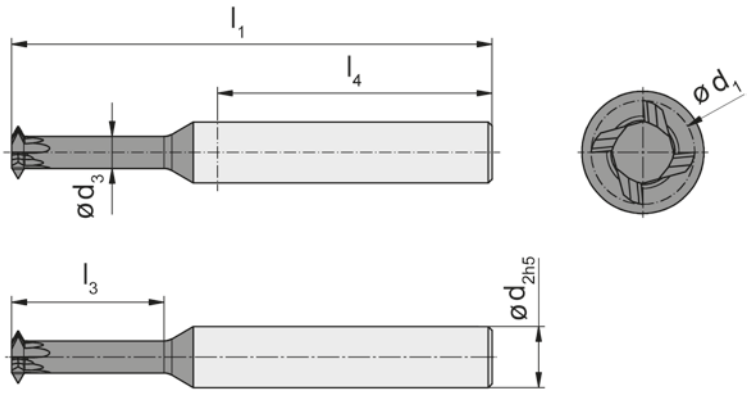

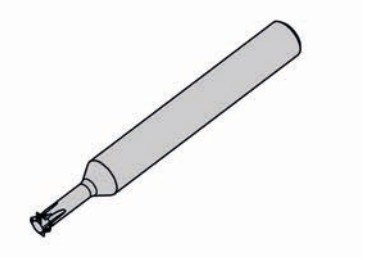

硬质合金牌号
Carbide grades

▲ 库存
on stock

Δ 4周
4 weeks

产品型号 Part number	螺纹 Thread	D_{min}	Z	P	P_{max}	d_1	d_2	d_3	l_1	l_3	l_4		AN25
DCG.3.M3.025.2.1.04	M3	2.4	3	0.25	0.35	2	4	1.45	39	8	22		▲
DCG.3.M3.035.2.1.04	M3	2.4	3	0.25	0.35	2	4	1.35	39	8	22		▲
DCG.3.M3.050.2.1.04	M3	2.4	3	0.5	0.5	2	4	1.2	39	8	22		▲
DCG.3.M35.050.2.1.04	M3,5	2.7	3	0.5	0.6	2.3	4	1.35	39	8	22		▲
DCG.3.M4.070.3.1.06	M4	3.3	3	0.7	0.75	2.8	6	1.7	50	10	36		▲
DCG.3.M5.050.3.1.06	M5	4.2	3	0.5	0.75	3.6	6	2.5	50	10	36		▲
DCG.3.M5.080.3.1.06	M5	4.2	3	0.8	1	3.6	6	2.2	50	10	36		▲
DCG.4.M6.100.3.1.06	M6	5	4	1	1.25	4.3	6	2.4	63	10	40		▲
DCG.4.M6.100.5.1.06	M6	5	4	1	1.25	4.3	6	2.4	63	16	40		▲
DCG.4.M8.075.5.1.08	M8-M10	6.5	4	0.75	1	5.5	8	3.85	63	16	40		▲
DCG.4.M8.075.6.1.08	M8-M10	6.5	4	0.75	1	5.5	8	3.85	63	20	36		▲
DCG.4.M8.075.7.1.08	M8-M10	6.5	4	0.75	1	5.5	8	3.85	77	25	40		▲
DCG.4.M8.125.6.1.08	M8-M10	6.5	4	1.25	1.5	5.5	8	3.4	63	20	36		▲
DCG.4.M8.125.8.1.08	M8-M10	6.5	4	1.25	1.5	5.5	8	3.4	77	30	40		▲
DCG.4.M10.150.6.1.08	M10-M12	8	4	1.5	1.75	6.8	8	4.1	63	20	36		▲
DCG.4.M10.150.8.1.08	M10-M12	8	4	1.5	1.75	6.8	8	4.1	77	30	40		▲
												P	●
												M	o
												K	-
												N	-
												S	-
												H	-

螺纹铣刀
Thread Milling Cutter

DCG

z3 z4

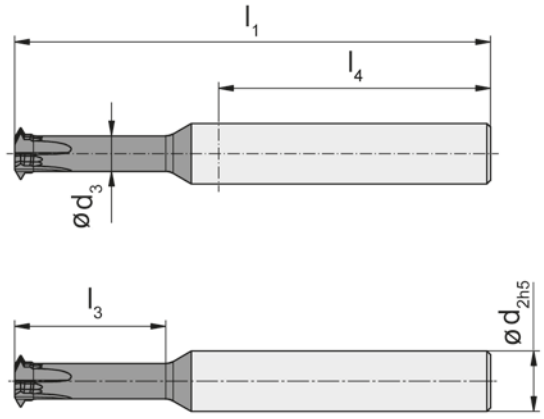

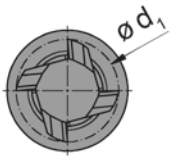

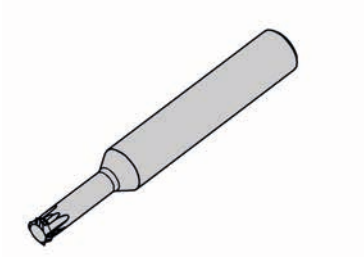

硬质合金牌号
Carbide grades

▲ 库存
on stock

Δ 4周
4 weeks

产品型号 Part number	螺纹 Thread	D_{min}	Z	P	d_1	d_2	d_3	l_1	l_3	l_4		AN25
DCG.3.M3.035.2.2.04	M3	2.4	3	0.35	2	4	1.4	39	8	22		▲
DCG.3.M3.050.2.2.04	M3	2.4	3	0.5	2	4	1.25	39	8	22		▲
DCG.3.M4.070.3.2.06	M4	3.3	3	0.7	2.8	6	1.9	50	10	36		▲
DCG.3.M5.050.3.2.06	M5	4.2	3	0.5	3.6	6	2.85	50	10	36		▲
DCG.4.M6.075.5.2.06	M6	5	4	0.75	4.2	6	3.1	63	16	40		▲
DCG.4.M6.100.5.2.06	M6	5	4	1	4.2	6	2.8	63	16	40		▲
DCG.4.M8.125.5.2.08	M8	6.5	4	1.25	5.5	8	3.7	63	16	40		▲
DCG.4.M10.100.6.2.08	M10	8	4	1	6.8	8	5.4	63	20	36		▲
DCG.4.M10.100.7.2.08	M10	8	4	1	6.8	8	5.4	77	25	40		▲
DCG.4.M10.150.6.2.08	M10	8	4	1.5	6.8	8	4.7	63	20	36		▲
DCG.4.M12.100.6.2.10	M12	10	4	1	8	10	6.3	63	20	36		▲
DCG.4.M12.125.8.2.10	M12	10	4	1.25	8	10	6.1	77	30	40		▲
DCG.4.M12.175.6.2.10	M12	10	4	1.75	8	10	5.5	63	20	36		▲
DCG.4.M12.175.8.2.10	M12	10	4	1.75	8	10	5.5	77	30	40		▲
											P	●
											M	o
											K	-
											N	-
											S	-
											H	-

螺纹铣刀
Thread Milling Cutter

DCG

UN | z3 | z4

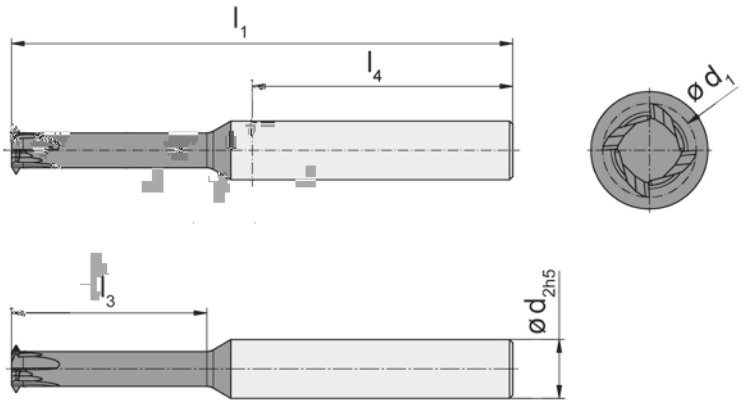

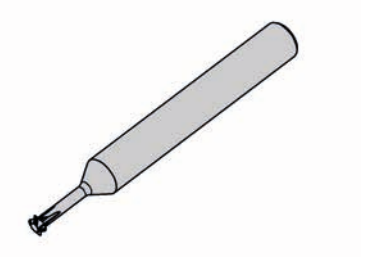

硬质合金牌号
Carbide grades

▲ 库存
on stock

Δ 4周
4 weeks

产品型号 Part number	螺纹 Thread	D_{min}	Z	P	d_1	d_2	d_3	l_1	l_3	l_4		AN25
DCG.3.60.540.2.04	#5 - 40 UNC	2.4	3	0.635	2	4	1.1	39	8	22		▲
DCG.3.60.632.2.04	#6 - 32UNC #8 - 32UNC	2.6	3	0.794	2.2	4	-	39	8	22		▲
DCG.4.60.1420.3.06	1/4“ - 20 UNC	4.9	4	1.27	3.5	6	-	63	10	40		▲
DCG.4.60.1428.3.06	1/4“ - 28 UNF	5.3	4	0.907	3.5	6	-	63	10	40		▲
DCG.4.60.51618.3.06	5/16“ - 18 UNC	6.4	4	1.411	4.2	6	-	63	10	40		▲
DCG.4.60.3816.7.08	3/8“ - 16 UNC	7.8	4	1.588	5.5	8	-	77	25	40		▲
DCG.4.60.71620.7.08	7/16“ - 20 UNF	9.1	4	1.27	7.2	8	-	77	30	40		▲
DCG.4.60.1213.7.08	1/2“ - 13 UNC	10.5	4	1.953	7.9	8	-	77	30	40		▲
											P	●
											M	o
											K	-
											N	-
											S	-
											H	-

螺纹铣刀
Thread Milling Cutter

DCG

BSW
BSF

z3

z4

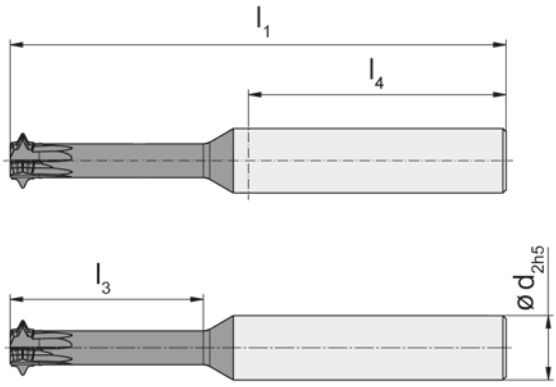

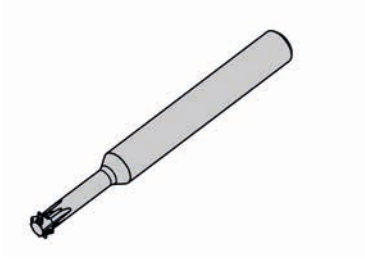

硬质合金牌号
Carbide grades

▲ 库存
on stock

Δ 4周
4 weeks

产品型号 Part number	螺纹 Thread	D_{min}	Z	P	d_1	d_2	d_3	l_1	l_3	l_4		AN25
DCG.3.55.1840.2.04	1/8“ - 40 BSW	2.3	3	0.635	2	4	1	39	8	22		▲
DCG.3.55.53232.2.04	5/32“ - 32 BSW	2.9	3	0.794	2.3	4	-	39	8	22		▲
DCG.3.55.31632.3.06	3/16“ - 32 BSF	3.7	3	0.794	2.8	6	-	50	10	36		▲
DCG.3.55.73224.3.06	7/32“ - 24 BSW	4.2	3	1.058	3.6	6	-	50	10	36		Δ
DCG.3.55.73228.3.06	7/32“ - 28 BSF	4.3	3	0.907	3.6	6	-	50	10	36		▲
DCG.3.55.1420.5.06	1/4“ - 20 BSW	4.7	3	1.27	4	6	-	63	16	40		▲
DCG.3.55.1426.5.06	1/4“ - 26 BSF	5	3	0.977	4.2	6	-	63	16	40		▲
DCG.4.55.51618.5.06	5/16“ - 18 BSW	6.1	4	1.411	5.2	6	-	63	16	40		▲
DCG.4.55.93226.5.06	9/32“ - 26 BSF	5.8	4	0.977	5	6	-	63	16	40		Δ
DCG.4.55.3816.5.08	3/8“ - 16 BSW	7.4	4	1.588	6.3	8	-	63	16	40		▲
DCG.4.55.3820.5.08	3/8“ - 20 BSF	7.8	4	1.27	6.5	8	-	63	16	40		▲
DCG.4.55.71614.5.08	7/16“ - 14 BSW	8.7	4	1.814	7.2	8	-	63	16	40		▲
DCG.4.55.71614.7.08	7/16“ - 14 BSW	8.7	4	1.814	7.2	8	-	77	25	40		▲
DCG.4.55.71618.5.08	7/16“ - 18 BSF	9.3	4	1.411	7.5	8	-	63	16	40		Δ
DCG.4.55.71618.7.08	7/16“ - 18 BSF	9.3	4	1.411	7.5	8	-	77	25	40		Δ
DCG.4.55.1212.6.10	1/2“ - 12 BSW	9.9	4	2.117	8.5	10	-	63	20	40		▲
DCG.4.55.1212.8.10	1/2“ - 12 BSW	9.9	4	2.117	8.5	10	5.25	77	30	40		▲
DCG.4.55.1216.6.10	1/2“ - 16 BSF	10.6	4	1.588	9.5	10	-	63	20	40		Δ

P	●
M	o
K	-
N	-
S	-
H	-

螺纹铣刀
Thread Milling Cutter

DCG

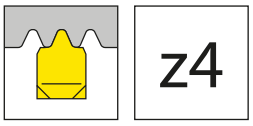

z4

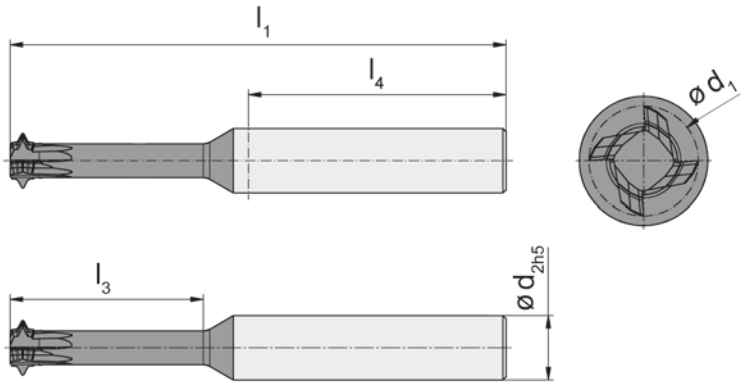

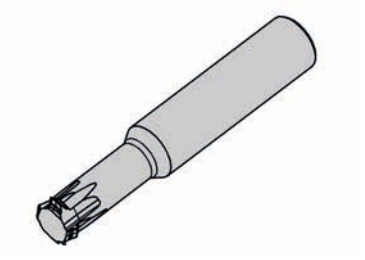

硬质合金牌号
Carbide grades

▲ 库存
on stock

Δ 4周
4 weeks

产品型号 Part number	螺纹 Thread	D_{min}	Z	P	d_1	d_2	d_3	l_1	l_3	l_4		AN25
DCG.4.55.G18.5.08	G 1/8“	8.5	4	0.91	6.6	8	5	63	16	40		▲
DCG.4.55.G14.6.10	G 1/4“	11.4	4	1.34	9.5	10	7.1	63	20	36		▲
DCG.4.55.G38.8.10	G 3/8“	14.9	4	1.34	9.8	10	7.4	77	30	40		▲
											P	●
											M	o
											K	-
											N	-
											S	-
											H	-

槽铣刀
Groove milling cutter

DCR

z3
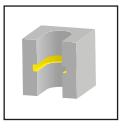
z4

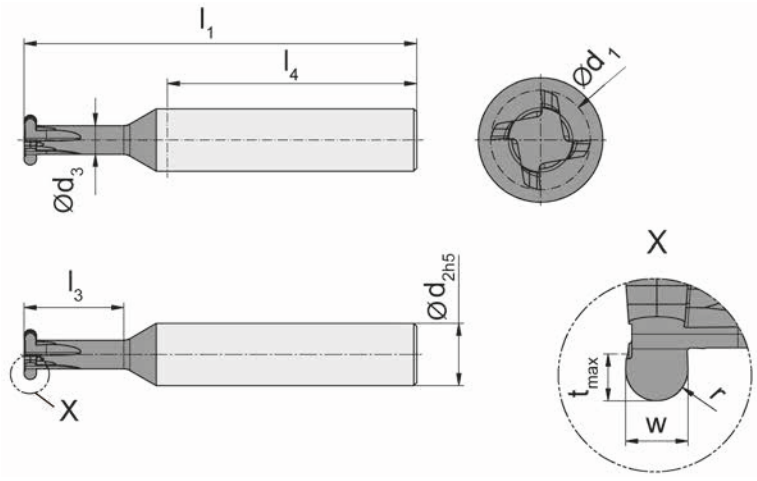

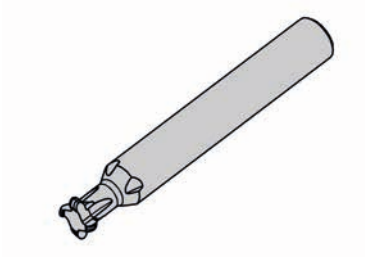

硬质合金牌号
Carbide grades

▲ 库存
on stock

Δ 4周
4 weeks

产品型号 Part number	Z	w	t_{max}	r	d_1	d_2	d_3	l_1	l_3	l_4		AN25
DCR.3.40.10.05.1.06	3	1	0.5	0.5	4	6	2.75	50	4	36		▲
DCR.3.60.10.05.1.06	3	1	1	0.5	6	6	3.7	50	4	36		▲
DCR.3.60.10.05.2.06	3	1	1	0.5	6	6	3.7	63	6	40		▲
DCR.3.60.15.75.2.06	3	1.5	1	0.75	6	6	3.7	63	6	40		▲
DCR.4.80.15.75.3.08	4	1.5	1.5	0.75	8	8	4.6	63	8	40		▲
DCR.4.80.15.75.5.08	4	1.5	1.5	0.75	8	8	4.6	63	16	40		▲
DCR.4.80.20.10.3.08	4	2	1.5	1	8	8	4.6	63	8	40		▲
DCR.4.80.20.10.5.08	4	2	1.5	1	8	8	4.6	63	16	40		▲
DCR.4.100.10.05.6.10	4	1	2	0.5	10	10	5.5	77	20	55		▲
DCR.4.100.15.75.6.10	4	1.5	2	0.75	10	10	5.5	77	20	55		▲
DCR.4.100.20.10.6.10	4	2	2	1	10	10	5.5	77	20	55		▲
DCR.4.100.25.12.6.10	4	2.5	2	1.25	10	10	5.5	77	20	55		▲
DCR.4.100.30.15.6.10	4	3	2	1.5	10	10	5.5	77	20	55		▲
											P	●
											M	o
											K	-
											N	-
											S	-
											H	-

槽铣刀
Groove milling cutter

DCN

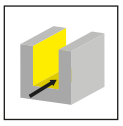

z3 z4

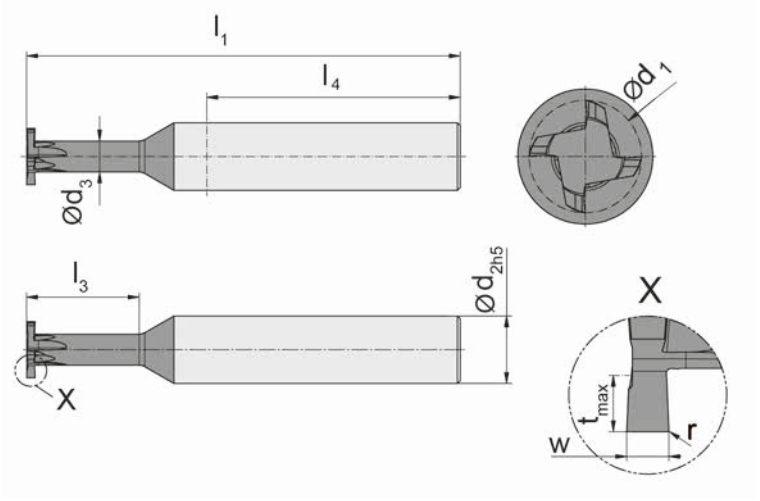

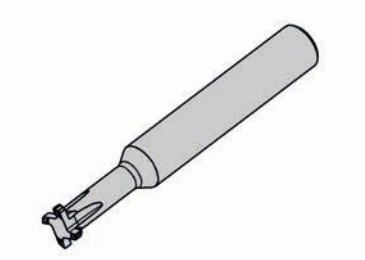

硬质合金牌号
Carbide grades

▲ 库存
on stock

Δ 4周
4 weeks

产品型号 Part number	Z	w	t_{max}	r	d_1	d_2	d_3	l_1	l_3	l_4		AN25
DCN.3.30.05.00.1.06	3	0.5	0.4	-	3	6	2	50	3	36		▲
DCN.3.30.05.00.2.06	3	0.5	0.4	-	3	6	2	50	5	36		▲
DCN.3.30.10.00.1.06	3	1	0.4	-	3	6	2	50	3	36		▲
DCN.3.30.10.00.2.06	3	1	0.4	-	3	6	2	50	5	36		▲
DCN.3.40.05.00.1.06	3	0.5	0.5	-	4	6	2.8	50	4	36		▲
DCN.3.40.10.00.1.06	3	1	0.5	-	4	6	2.8	50	4	36		▲
DCN.3.60.10.00.1.06	3	1	1	-	6	6	3.7	50	4	36		▲
DCN.3.60.10.00.2.06	3	1	1	-	6	6	3.7	63	6	40		▲
DCN.3.60.15.15.2.06	3	1.5	1	0.15	6	6	3.7	63	6	40		▲
DCN.4.80.15.15.3.08	4	1.5	1.5	0.15	8	8	4.6	63	8	40		▲
DCN.4.80.15.15.5.08	4	1.5	1.5	0.15	8	8	4.6	63	16	40		▲
DCN.4.80.20.15.3.08	4	2	1.5	0.15	8	8	4.6	63	8	40		▲
DCN.4.80.20.15.5.08	4	2	1.5	0.15	8	8	4.6	63	16	40		▲
DCN.4.100.10.00.6.10	4	1	2	-	10	10	5.5	77	20	50		▲
DCN.4.100.15.00.6.10	4	1.5	2	-	10	10	5.5	77	20	50		▲
DCN.4.100.20.15.6.10	4	2	2	0.15	10	10	5.5	77	20	50		▲
DCN.4.100.25.15.6.10	4	2.5	2	0.15	10	10	5.5	77	20	50		▲
DCN.4.100.30.15.6.10	4	3	2	0.15	10	10	5.5	77	20	50		▲

P	●
M	o
K	-
N	-
S	-
H	-

槽铣刀
Groove milling cutter

DCX

z6 z8

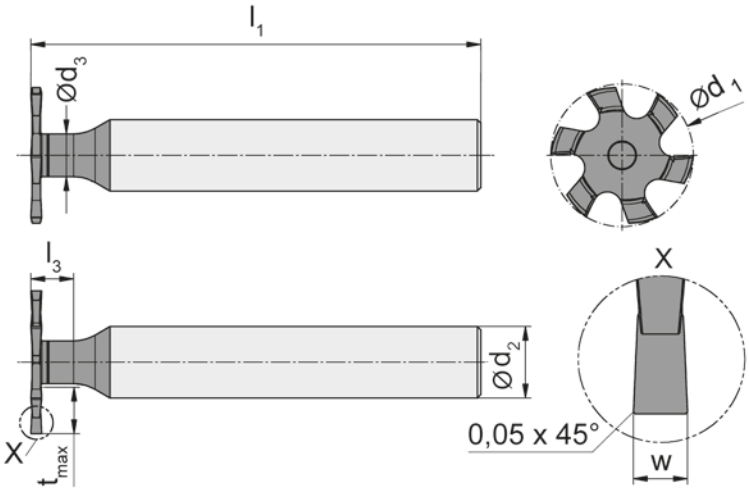

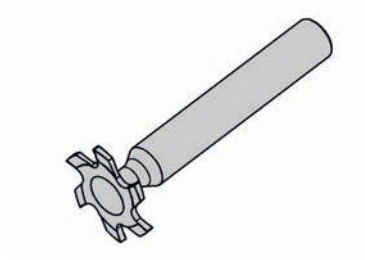

硬质合金牌号
Carbide grades

▲ 库存
on stock

Δ 4周
4 weeks

产品型号 Part number	Z	w	t_{max}	d_1	d_2	d_3	l_1	l_3	l_4		AS45
DCX.6.20.150.2.05.10	6	1.5	7	20	10	5	63	6	50		▲
DCX.6.20.200.2.05.10	6	2	7	20	10	5	63	6	50		▲
DCX.6.20.250.2.05.10	6	2.5	7	20	10	5	63	6	50		▲
DCX.6.25.150.2.06.10	6	1.5	9	25	10	6	63	6	51		▲
DCX.6.25.200.2.06.10	6	2	9	25	10	6	63	6	51		▲
DCX.6.25.250.2.06.10	6	2.5	9	25	10	6	63	6	51		▲
DCX.6.30.150.4.07.12	6	1.5	11	30	12	7	80	9	65		▲
DCX.6.30.200.4.07.12	6	2	11	30	12	7	80	9	65		▲
DCX.6.30.250.4.07.12	6	2.5	11	30	12	7	80	9	65		▲
DCX.6.30.300.4.07.12	6	3	11	30	12	7	80	9	65		▲
DCX.6.35.150.4.08.12	6	1.5	13	35	12	8	80	11	64		▲
DCX.6.35.200.4.08.12	6	2	13	35	12	8	80	11	64		▲
DCX.6.35.250.4.08.12	6	2.5	13	35	12	8	80	11	64		▲
DCX.6.35.300.4.08.12	6	3	13	35	12	8	80	11	64		▲
DCX.8.40.150.4.09.12	8	1.5	15	40	12	9	80	11	65		▲
DCX.8.40.200.4.09.12	8	2	15	40	12	9	80	11	65		▲
DCX.8.40.250.4.09.12	8	2.5	15	40	12	9	80	11	65		▲
DCX.8.40.300.4.09.12	8	3	15	40	12	9	80	11	65		▲

P	●
M	●
K	●
N	o
S	●
H	-

铣削倒角刀
Chamfer Milling Cutter

DCF

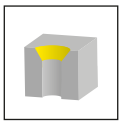
z3
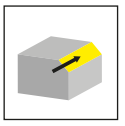
z4

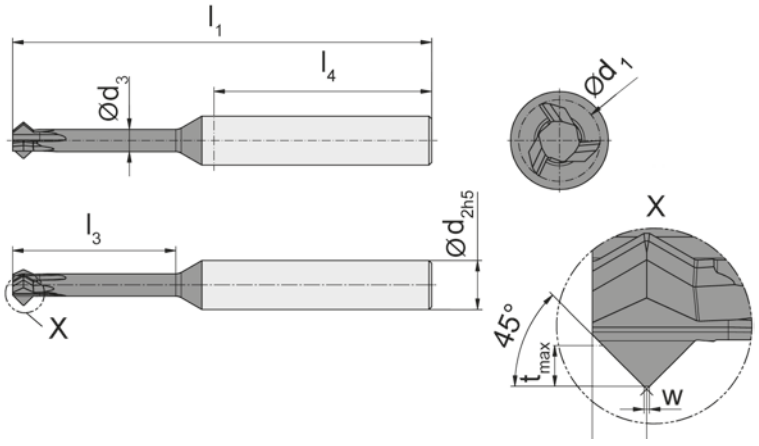

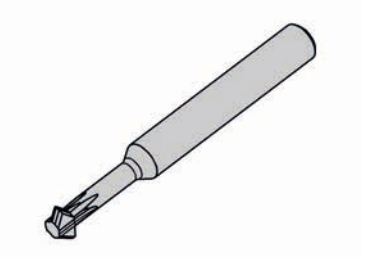

硬质合金牌号
Carbide grades

▲ 库存
on stock

Δ 4周
4 weeks

产品型号 Part number	Z	w	倒角 Chamfer	t_{max}	d_1	d_2	d_3	l_1	l_3	l_4		AN25
DCF.3.20.4545.1.04	3	0.2	45°	0.3	2	4	1.25	39	4	22		▲
DCF.3.30.4545.2.04	3	0.2	45°	0.3	3	4	2.1	39	6	22		▲
DCF.3.40.4545.3.06	3	0.2	45°	0.75	4	6	2.2	50	8	36		▲
DCF.3.50.4545.3.06	3	0.2	45°	1	5	6	2.7	50	10	36		▲
DCF.3.60.4545.5.06	3	0.2	45°	1.25	6	6	3.15	63	16	40		▲
DCF.3.60.4545.6.06	3	0.2	45°	1.25	6	6	3.15	63	20	40		▲
DCF.3.75.4545.6.08	3	0.2	45°	1.5	7.5	8	4.1	63	20	40		▲
DCF.3.75.4545.8.08	3	0.2	45°	1.5	7.5	8	4.1	77	30	40		▲
DCF.4.75.4545.8.08	4	0.2	45°	1.5	7.5	8	4.1	77	30	40		▲
											P	●
											M	o
											K	-
											N	-
											S	-
											H	-

切削参数
Cutting data

材料组 Material			材料组 Material group	硬度 (HB) Hardness Brinell	抗拉强度 R_m [N/mm²] Tensile Strength	材料示例 Example Material	切削速度 vc (m/min) Cutting speed 起始值 Start values ES1_ AN2_ AS4_	fz
P	碳钢 Carbon steel	~ 0,2 % C	P1.1	125	430	CK15	250-180	0,01 -0,03
		~ 0,4% C 退火 annealed	P1.2	190	610	19Mn6	220-160	0,01 -0,03
		~ 0,4% C调质 quenched	P1.3	210	640	36Mn5	200-140	0,01 -0,03
		~ 0,6% C 退火 annealed	P1.4	190	610	C55	180-120	0,01 -0,03
		~ 0,6% C 调质 quenched	P1.5	300	1000	CK60	150-90	0,01 -0,03
		易切钢 Free cutting steel	P1.6	220	750	9SMn28	250-180	0,01 -0,03
	合金钢 (<5%) Alloyed steel	退火 annealed	P2.1	180	590	100Cr6	200-140	0,01 -0,03
		调质 quenched	P2.2	280	960	14NiCr10	150-90	0,01 -0,03
		调质 quenched	P2.3	350	1250	34CrMo4	140-80	0,01 -0,03
		调质 quenched	P2.4	430	1450	55Cr3	140-80	0,01 -0,03
	高合金钢 (>5%) high alloyed steel	退火 annealed	P3.1	200	680	X10CrAl18	180-120	0,01 -0,03
		硬化 hardened	P3.2	350	1200	X210Cr2	140-80	0,01 -0,03
	铸钢 Cast steel	非合金 unalloyed	P4.1	180	590	GE200	250-180	0,01 -0,03
		合金 alloyed	P4.2	220	750	GX40CrSi28	220-160	0,01 -0,03
	粉末冶金钢 Sintered steel	软质 soft	P5.1	220	570	Sint-D39		0,01 -0,03
M	不锈钢Stainless steel	马氏体,铁素体 martensitic ferritic	M1.1	200	680	X16Cr13	150-90	0,01 -0,03
		奥氏体 austenitic	M1.2	300	1000	X6CrNiMo-Ti17-12-2	140-80	0,01 -0,03
		奥氏体 , 铁素体 austenitic ferritic	M1.3	230	780	X2CrNi-MoN17-13-3	120-60	0,01 -0,03
H	淬硬钢 Hardened steels	50-55 HRC	H1.1	-	-			
		55-60 HRC	H1.2	-	-			
		60-63 HRC	H1.3	-	-			
		> 63HRC	H1.4	-	-			

切削参数
Cutting data

材料组 Material			材料组 Material group	硬度 (HB) Hardness Brinell	抗拉强度 R_m [N/mm²] Tensile Strength	材料示例 Example Material	切削速度 vc (m/min) Cutting speed 起始值 Start values ES1_ AN2_ AS4_	fz
K	灰铸铁 Grey cast iron	低拉伸强度 low tensile strength	K1.1	180	250	GG-25	230-190	0,01 -0,03
		高拉伸强度 high tensile strength	K1.2	250	350	GG-40	230-190	0,01 -0,03
	球磨铸铁 Spheroidal graphite cast iron	铁素体 ferritic	K2.1	160	400	GGG-40	220-160	0,01 -0,03
		珠光体 perlitic	K2.1	260	700	GGG-60	220-160	0,01 -0,03
	可锻铸铁 Malleable cast iron	铁素体 ferritic	K3.1	200	400	GTW-45	220-160	0,01 -0,03
		珠光体 perlitic	K3.2	260	700	GTS-55-04	220-160	0,01 -0,03
	奥氏体球墨铸铁 / ADI Ausferritic spheroidal cast iron / ADI	调质 quenched	K4.1	260	800			
		调质 quenched	K4.2	350	1050			
		调质 quenched	K4.3	450	1400			
N	铝合金 Al-alloys	非热处理 not heat treatable	N1.1	30		AlMg1	bis 1000	0,02 - 0,04
		热处理 heat treatable	N1.2	100	340	AlMgSi1	600-200	0,02 - 0,04
	铸铝合金 Al-cast-alloy	< 6% Si	N2.1	80	300	AlMgSi6	400-200	0,02 - 0,04
		6-10% Si	N2.2	100	320	AlSi7Mg		
		10-15 % Si	N2.3	130	450	AlSi12		
	铜合金 Copper-alloys	纯铜 Pure copper	N3.1	100	340	Cu	400-200	0,02 - 0,04
		黄铜,青铜 Brass	N3.2	90	310	CuZn40Pb	400-200	0,02 - 0,04
		无铅黄铜 Lead-free brass	N3.3	110	430	CuZn40	400-200	0,02 - 0,04
		高强度 high strength	N3.4	300	1000	CuZn25Al-5Mn4Fe3	160-100	0,02 - 0,04
	石墨 Graphite		N4.1					
S	耐热合金(铁基) Heat resistant alloy	退火 annealed	S1.1	200	670		120-60	0,02 - 0,04
		硬化 hardened	S1.2	275	930		120-60	0,02 - 0,04
	耐热合金 (镍基,钴基) Heat resistant alloy	退火 annealed	S2.1	250	840	Inconel 600	90-30	0,02 - 0,04
		硬化 hardened	S2.2	350	1200	Inconel 713	90-30	0,02 - 0,04

切削参数
Cutting data

材料组 Material			材料组 Material group	硬度 (HB) Hardness Brinell	抗拉强度 R_m [N/mm²] Tensile Strength	材料示例 Example Material	切削速度 vc (m/min) Cutting speed 起始值 Start values	
							ES1_ AN2_ AS4_	fz
S	钛 Titan	钛合金 α Titanium alloy α	S3.1	120	240		120-80	0,02 - 0,04
		钛合金 α-β Titanium alloy α- β	S3.2	360	1200		120-80	0,02 - 0,04
		钛合金 β Titanium alloy β	S3.3	410	1400		120-80	0,02 - 0,04
O	热塑性塑料 Thermoplastics		O1.1					
	Duro塑料 Duro plaste		O1.2					
	玻璃纤维增强塑料 Plastics glass fibre reinforced	GFK	O1.3					
	碳纤维增强塑料 Plastics carbon fibre reinforced	CFK	O1.4					

系列/System	页/Page
M304	**28**
M306	**36**
M308	**66**
M311	**88**
M116	**110**
M313	**116**
M328	**150**
M332	**176**
M335	**200**
M620	**204**

槽铣削(圆弧插补铣削)
Groove Milling by circular interpolation

铣刀杆
Milling shank
M304/M304.ST

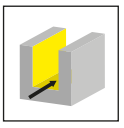

页/Page
30-31

刀片
Insert
304

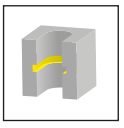

页/Page
32

页/Page
33

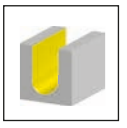

页/Page
34

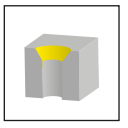

页/Page
35

M304

铣刀杆

带可转位刀片

孔径自Ø 7.7 mm

Milling shank with exchangeable insert

from bore Ø 7,7 mm

铣刀杆
Milling shank

M304

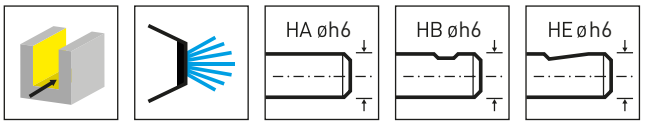

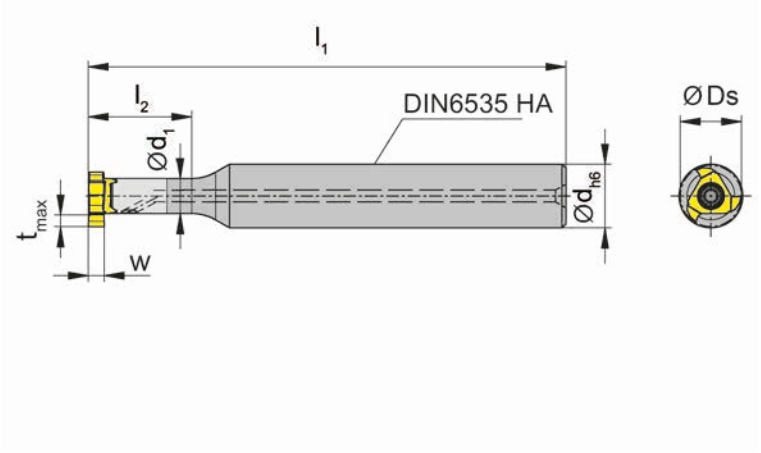

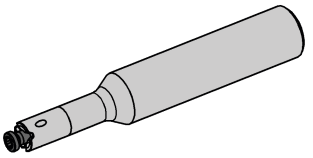

产品型号 Part number	d	l_1	l_2	d_1	形式 Form	HWS
M304.0008.01A	8	60	13	4.4	A	304044R
M304.0008.02A	8	64	17	4.4	A	304044R
M304.0008.03A	8	68	21	4.4	A	304044R
M304.0008.01B	8	60	13	4.4	B	304044R
M304.0008.02B	8	64	17	4.4	B	304044R
M304.0008.03B	8	68	21	4.4	B	304044R
M304.0008.01E	8	60	13	4.4	E	304044R
M304.0008.02E	8	64	17	4.4	E	304044R
M304.0008.03E	8	68	21	4.4	E	304044R

w,Ds,tmax见刀片
w, Ds, tmax see inserts

配件
Spare Parts

铣刀杆 Milling shank	锁紧螺钉 Clamping Screw	TORX PLUS®扳手 TORX PLUS® Wrench
M304...	**1.8.4T6EP**	**T6PL**

铣刀杆
Milling shank

M304.ST

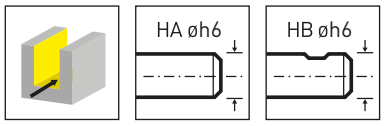

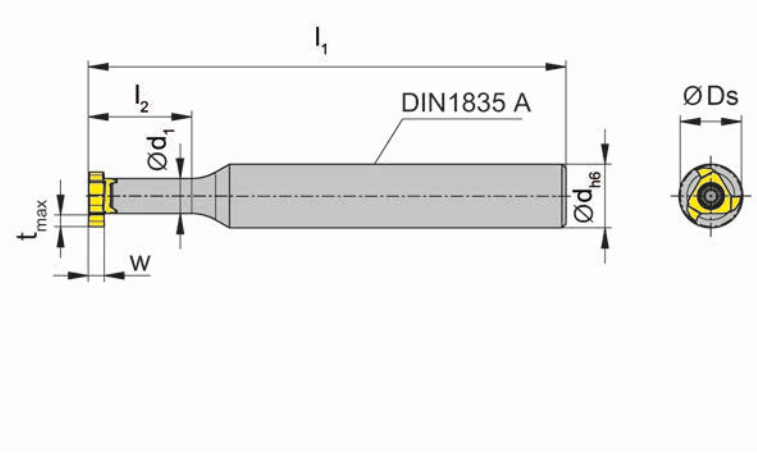

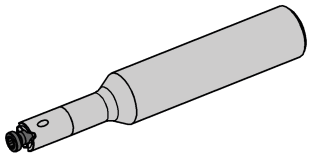

产品型号 Part number	d	l_1	l_2	d_1	形式 Form	HWS
M304.ST08.01A	8	60	13	4.4	A	304044R
M304.ST08.01B	8	60	13	4.4	B	304044R

w,Ds,tmax见刀片
w, Ds, tmax see inserts

配件
Spare Parts

铣刀杆 Milling shank	锁紧螺钉 Clamping Screw	TORX PLUS®扳手 TORX PLUS® Wrench
M304...	**1.8.4T6EP**	**T6PL**

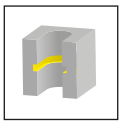

z3

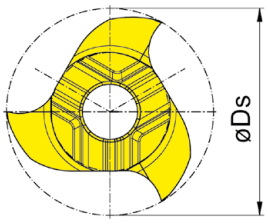

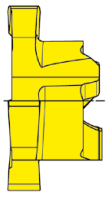

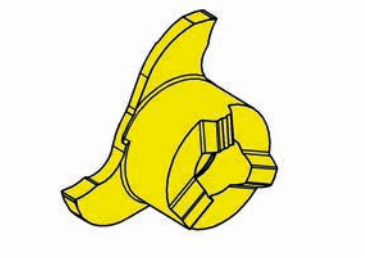

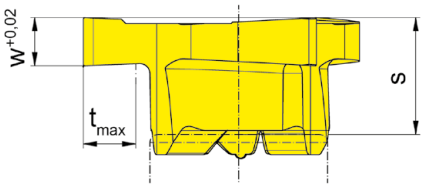

图示=右手型
Picture = right hand cutting version

硬质合金牌号
Carbide grades

▲ 库存
on stock

Δ 4周
4 weeks

产品型号 Part number	Ds	w	s	r	t_{max}	Z	HIS		EG35	EG55	IG35
304.0025.20	7.7	0.25	2.6	-	1.3	3	304044R		▲		Δ
304.0030.20	7.7	0.3	2.6	-	1.3	3	304044R		▲		Δ
304.0040.20	7.7	0.4	2.6	-	1.3	3	304044R		▲		Δ
304.0050.20	7.7	0.5	2.6	-	1.3	3	304044R			▲	▲
304.0060.20	7.7	0.6	2.6	-	1.3	3	304044R		▲		Δ
304.0070.20	7.7	0.7	2.6	-	1.3	3	304044R		▲		Δ
304.0100.20	7.7	1	2.6	-	1.3	3	304044R			▲	▲
304.0150.20	7.7	1.5	2.9	0.1	1.3	3	304044R			▲	▲
304.0200.20	7.7	2	2.9	0.2	1.3	3	304044R			▲	▲
								P	●	●	-
								M	●	o	●
								K	o	o	-
								N	-	-	-
								S	-	-	●
								H	-	-	-

z3

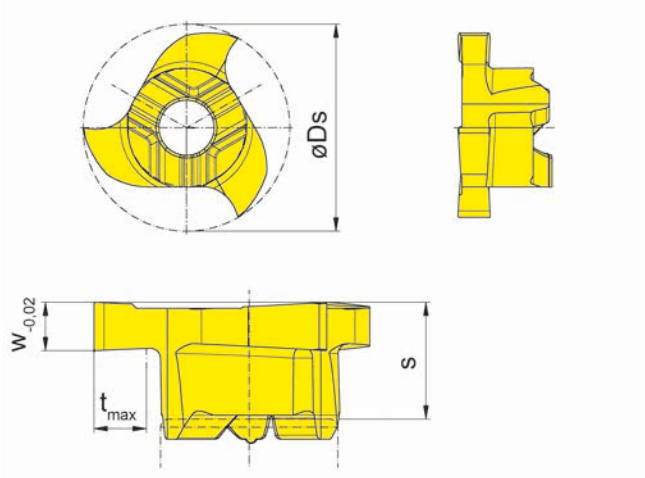

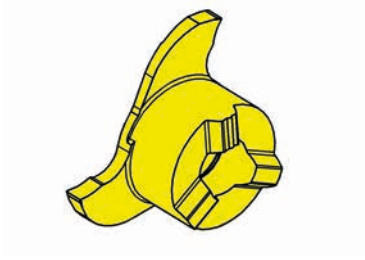

图示=右手型
Picture = right hand cutting version

硬质合金牌号
Carbide grades

▲ 库存
on stock

Δ 4周
4 weeks

产品型号 Part number	Ds	Nw	w	s	t_{max}	Z	HIS		EG55	IG35
304.0080.20	7.7	0.8	0.87	2.6	1.3	3	304044R		▲	▲
304.0090.20	7.7	0.9	0.97	2.6	1.3	3	304044R		▲	▲
304.0110.20	7.7	1.1	1.21	2.9	1.3	3	304044R		▲	▲
304.0130.20	7.7	1.3	1.41	2.9	1.3	3	304044R		▲	▲
								P	●	-
								M	o	●
								K	o	-
								N	-	-
								S	-	●
								H	-	-

z3

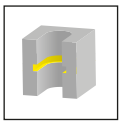

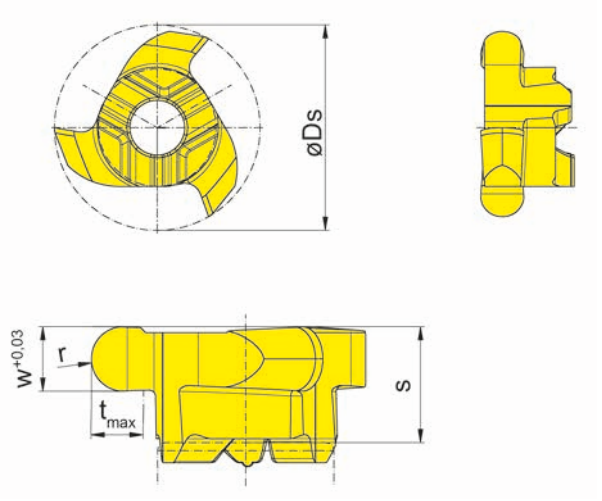

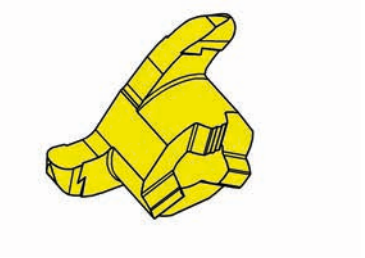

图示=右手型
Picture = right hand cutting version

硬质合金牌号
Carbide grades

▲ 库存
on stock

Δ 4周
4 weeks

产品型号 Part number	Ds	w	s	r	t_{max}	Z	HIS		EG55	IG35
304.0004.08	7.7	0.8	2.6	0.4	1.3	3	304044R		▲	▲
304.0006.12	7.7	1.2	2.9	0.6	1.3	3	304044R		▲	▲
304.0008.16	7.7	1.6	2.9	0.8	1.3	3	304044R		Δ	Δ
								P	●	-
								M	o	●
								K	o	-
								N	-	-
								S	-	●
								H	-	-

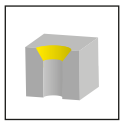

z3

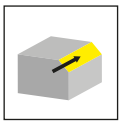

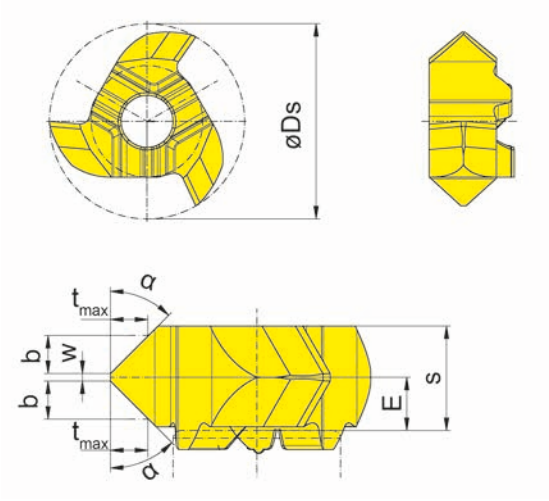

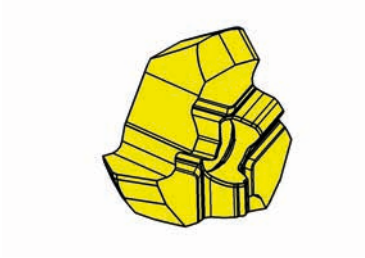

图示=右手型
Picture = right hand cutting version

硬质合金牌号
Carbide grades

▲ 库存
on stock

Δ 4周
4 weeks

产品型号 Part number	Ds	E	s	w	α	b	t_{max}	Z	HIS		EG55	IG35
304.1515.20	7.7	1.4	2.75	0.2	15°	1	0.3	3	304044R		Δ	Δ
304.3030.20	7.7	1.4	2.75	0.2	30°	1	0.6	3	304044R		▲	▲
304.4545.20	7.7	1.4	2.75	0.2	45°	1	1	3	304044R		▲	▲
										P	●	-
										M	o	●
										K	o	-
										N	-	-
										S	-	●
										H	-	-

槽铣削(圆弧插补铣削)
Groove Milling by circular interpolation

铣刀杆
Milling shank
M306/M306.ER/M306.ST

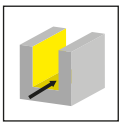

页/Page
38, 40-42

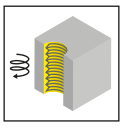

页/Page
39

常规刀柄
Basic Holder
WFB

页/Page
43

螺纹锁紧铣刀
Screw-in cutter
M306.M

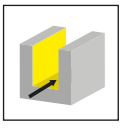

页/Page
44

刀片
Insert
108/306/606

页/Page
45-46, 50-53, 60

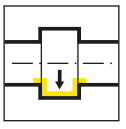

页/Page
47

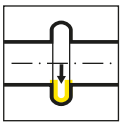

页/Page
48

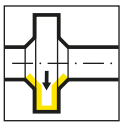

页/Page
49

页/Page
54, 57

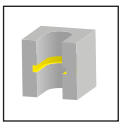

页/Page
55-56, 61

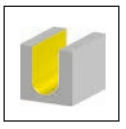

页/Page
58

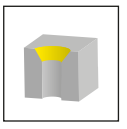

页/Page
59, 62-63

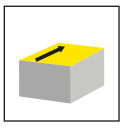

页/Page
64-65

M306

铣刀杆

带可转位刀片

孔径自Ø 10 mm

Milling shank with exchangeable insert

from bore Ø 10 mm

铣刀杆
Milling shank

M306

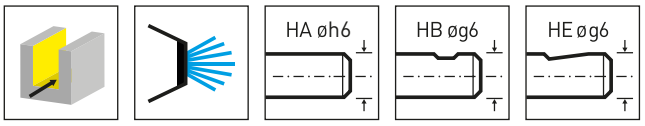

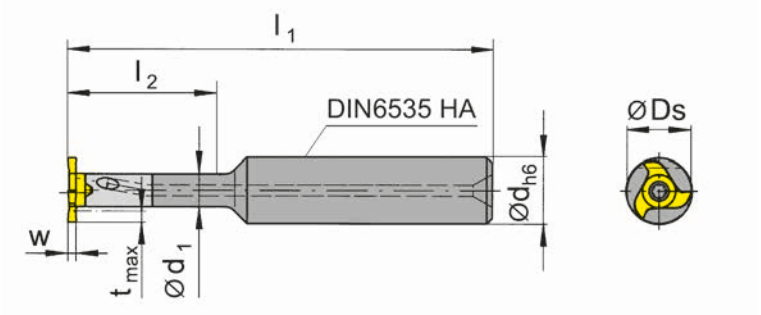

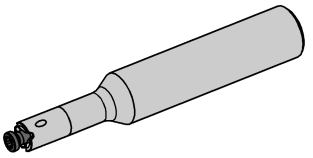

产品型号 Part number	d	l_1	l_2	d_1	形式 Form	HWS
M306.0012.01A	12	80	21	6	A	306060R • 306060L
M306.0012.02A	12	90	30	6	A	306060R • 306060L
M306.0012.03A	12	100	42	6	A	306060R • 306060L
M306.0012.01B	12	80	21	6	B	306060R • 306060L
M306.0012.02B	12	90	30	6	B	306060R • 306060L
M306.0012.03B	12	100	42	6	B	306060R • 306060L
M306.0012.01E	12	80	21	6	E	306060R • 306060L
M306.0012.02E	12	90	30	6	E	306060R • 306060L
M306.0012.03E	12	100	42	6	E	306060R • 306060L

w,Ds,tmax见刀片
w, Ds, tmax see inserts

配件
Spare Parts

铣刀杆 Milling shank	锁紧螺钉 Clamping Screw	TORX PLUS®扳手 TORX PLUS® Wrench
M306...	**2.6.5T8EP**	**T8PL**

铣刀杆
Milling shank

M306

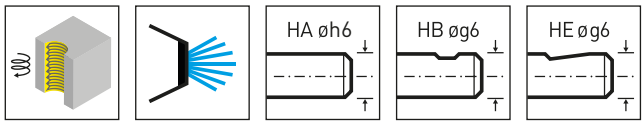

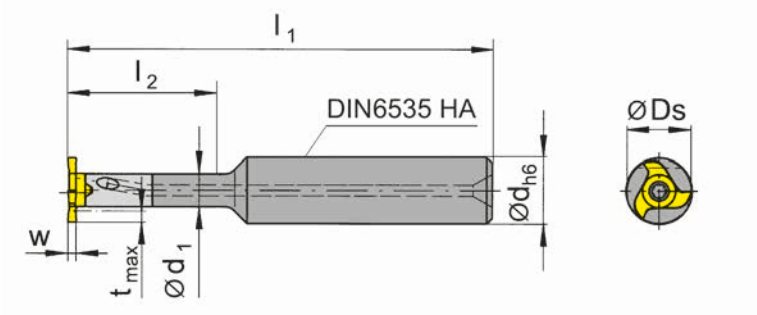

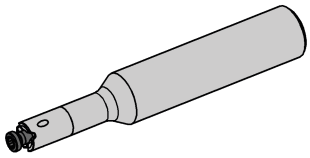

产品型号 Part number	d	l_1	l_2	d_1	形式 Form	HWS
M306.0712.02A	12	90	30	7.3	A	306060R • 306060L
M306.0716.01A	16	100	25	7.3	A	306060R • 306060L
M306.0716.02A	16	110	35	7.3	A	306060R • 306060L
M306.0712.02B	12	90	30	7.3	B	306060R • 306060L
M306.0716.01B	16	100	25	7.3	B	306060R • 306060L
M306.0712.02E	12	90	30	7.3	E	306060R • 306060L
M306.0716.01E	16	100	25	7.3	E	306060R • 306060L

w,Ds,tmax见刀片
w, Ds, tmax see inserts

配件
Spare Parts

铣刀杆 Milling shank	锁紧螺钉 Clamping Screw	TORX PLUS®扳手 TORX PLUS® Wrench
M306...	**2.6.5T8EP**	**T8PL**

铣刀杆
Milling shank

M306

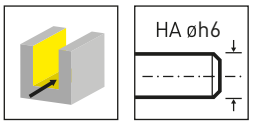

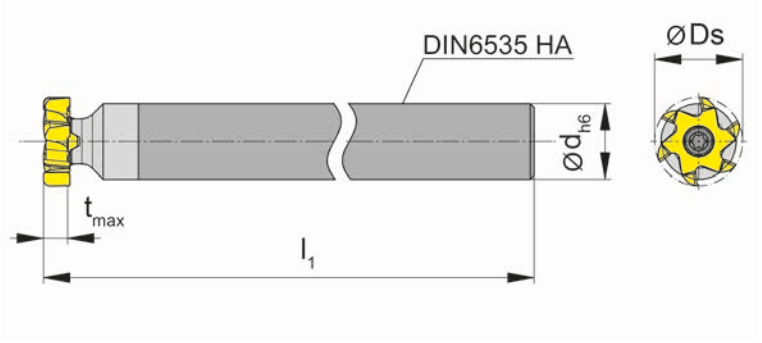

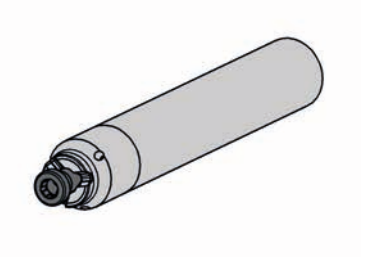

产品型号 Part number	d	l_1	形式 Form	HWS
M306.0707.03A	7.5	100	A	306060R • 306060L
M306.1010.03A	10	120	A	306060R • 306060L

tmax和Ds见刀片
tmax and Ds see inserts

配件
Spare Parts

铣刀杆 Milling shank	锁紧螺钉 Clamping Screw	TORX PLUS®扳手 TORX PLUS® Wrench
M306...	**2.6.5T8EP**	**T8PL**

M306.ER

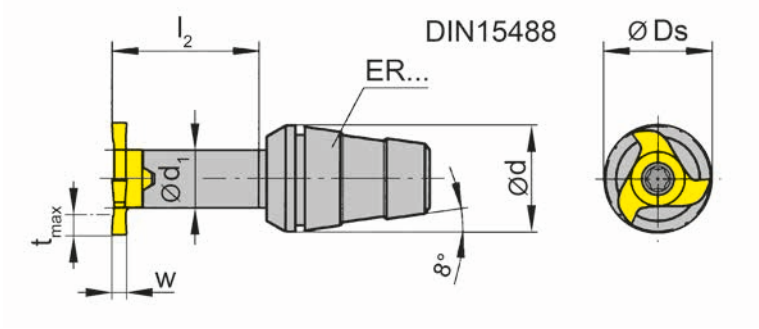

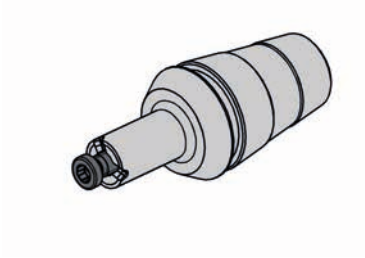

产品型号 Part number	d	l_2	d_1	锁紧螺母 Clamping nut	HWS
M306.ER11.02	11	16	6	ER11.6499	306060R • 306060L

w,Ds,tmax见刀片
w, Ds, tmax see inserts

铣刀杆不包含夹紧螺母-需要单独订购!
Clamping nut is not combined with milling shank - separate order required!

配件
Spare Parts

铣刀杆 Milling shank	**锁紧螺钉** Clamping Screw	**TORX PLUS®扳手** TORX PLUS® Wrench
M306.ER11.02	**2.6.5T8EP**	**T8PL**

铣刀杆
Milling shank

M306.ST

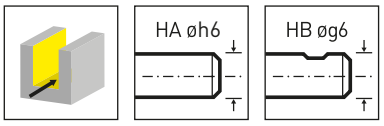

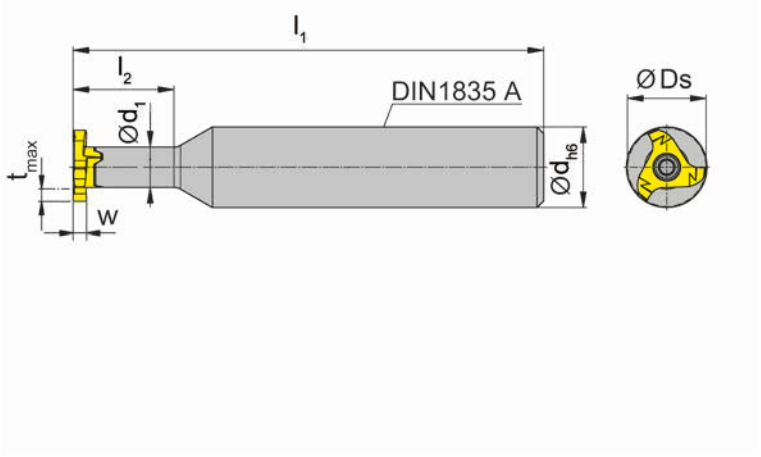

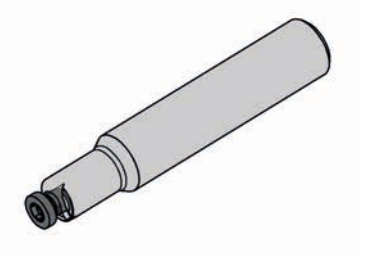

产品型号 Part number	d	l_1	l_2	d_1	形式 Form	HWS
M306.ST10.01A	10	60	15	6	A	306060R • 306060L
M306.ST12.01A	12	70	15	6	A	306060R • 306060L
M306.ST10.01B	10	60	15	6	B	306060R • 306060L
M306.ST12.01B	12	70	15	6	B	306060R • 306060L

w,Ds,tmax见刀片
w, Ds, tmax see inserts

配件
Spare Parts

铣刀杆 Milling shank	锁紧螺钉 Clamping Screw	TORX PLUS®扳手 TORX PLUS® Wrench
M306...	**2.6.5T8EP**	**T8PL**

WFB

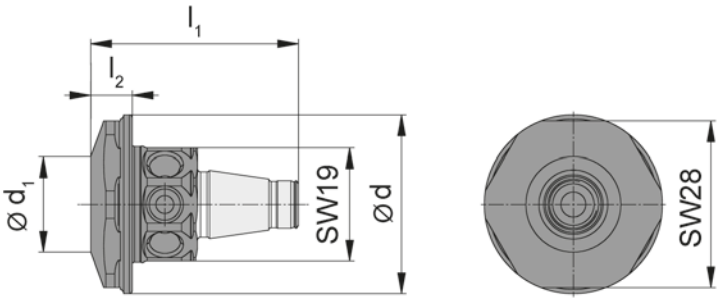

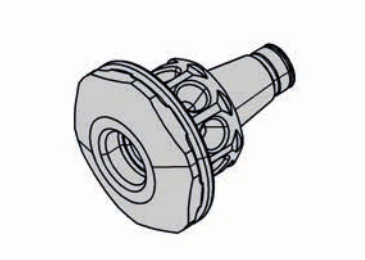

产品型号 Part number	l_1	l_2	d_1	d
WFB.2012.M081.01	35	7	16	30

配合螺纹锁紧型铣刀
for Screw-in cutter

螺纹锁紧铣刀
Screw-in cutter

M306.M

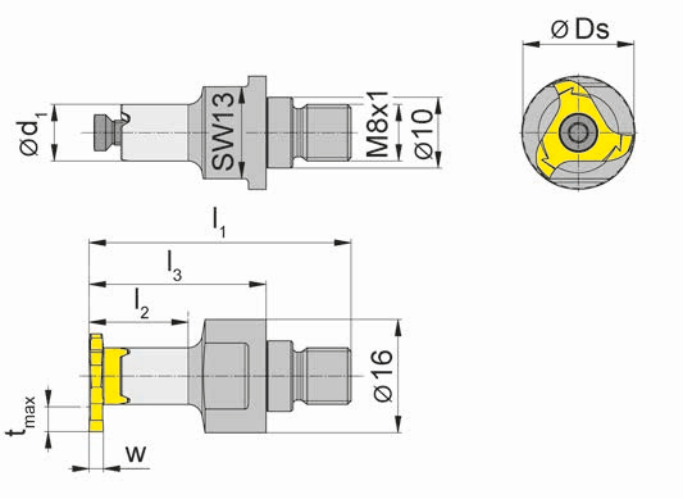

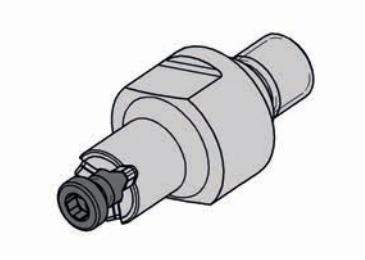

产品型号 Part number	l_1	l_2	l_3	d_1	SW
M306.M081.01	37	11	25	6	13

w,Ds,tmax见刀片
w, Ds, tmax see inserts

配件
Spare Parts

螺纹锁紧铣刀 Screw-in cutter	锁紧螺钉 Clamping Screw	TORX PLUS®扳手 TORX PLUS® Wrench
M306.M081.01	**2.6.5T8EP**	**T8PL**

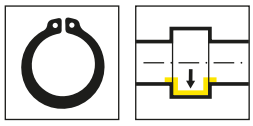

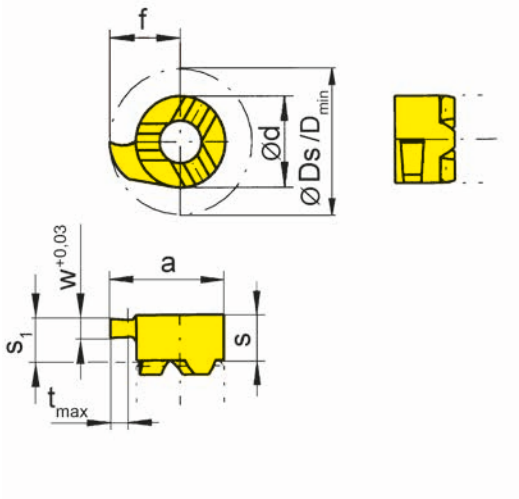

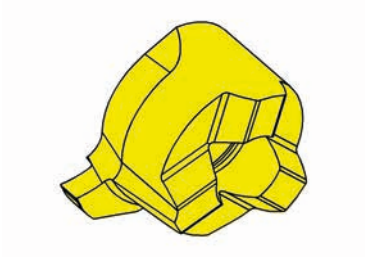

R=右手型-如图
R = right hand version shown

L=左手型
L = left hand version

硬质合金牌号
Carbide grades

▲ 库存
on stock

Δ 4周
4 weeks

产品型号 Part number	w	Nw	f	Ds	d	s	s_1	a	t_{max}	D_{min}	Z	HIS		EG55	TH35	TN35
R108.0070.00	0.74	0.7	4.8	9.6	6	3.6	3.2	7.8	1	8	1	306060R		▲	▲	▲
R108.0080.00	0.84	0.8	4.8	9.6	6	3.6	3.2	7.8	1	8	1	306060R		▲	▲	▲
R108.0090.00	0.94	0.9	4.8	9.6	6	3.6	3.2	7.8	1	8	1	306060R		▲	▲	▲
L108.0070.00	0.74	0.7	4.8	9.6	6	3.6	3.2	7.8	1	8	1	306060L		Δ	▲	▲
L108.0080.00	0.84	0.8	4.8	9.6	6	3.6	3.2	7.8	1	8	1	306060L		Δ	Δ	▲
L108.0090.00	0.94	0.9	4.8	9.6	6	3.6	3.2	7.8	1	8	1	306060L		Δ	▲	▲
													P	●	●	●
													M	o	●	●
													K	o	●	●
													N	-	●	●
													S	-	●	●
													H	-	-	-

无法进行端面切削，切削深度受限
not face cutting, limited depth of cut

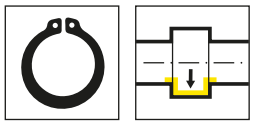

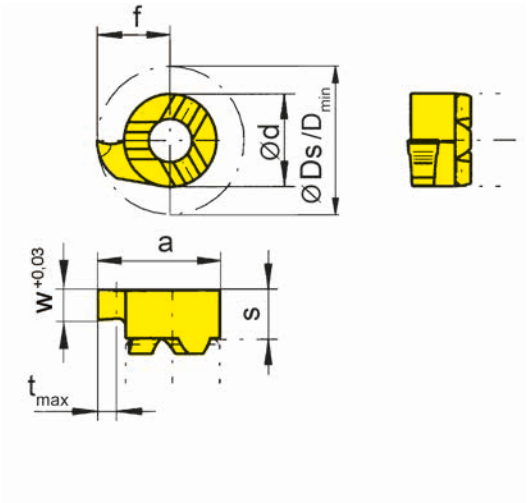

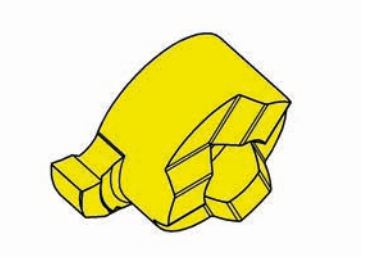

R=右手型-如图
R = right hand version shown

L=左手型
L = left hand version

▲ 库存
on stock

硬质合金牌号
Carbide grades

Δ 4周
4 weeks

产品型号 Part number	w	Nw	s	f	Ds	a	d	t_{max}	D_{min}	Z	HIS		MG12	EG55	TH35	TN35
R108.0110.00	1.19	1.1	3.2	4.8	9.6	7.8	6	1	8	1	306060R		▲	▲	▲	▲
R108.0130.00	1.39	1.3	3.2	4.8	9.6	7.8	6	1	8	1	306060R		▲	▲	▲	▲
R108.0160.00	1.69	1.6	3.2	4.8	9.6	7.8	6	1	8	1	306060R		▲	Δ	▲	▲
L108.0110.00	1.19	1.1	3.2	4.8	9.6	7.8	6	1	8	1	306060L		▲	Δ	▲	▲
L108.0130.00	1.39	1.3	3.2	4.8	9.6	7.8	6	1	8	1	306060L				Δ	▲
L108.0160.00	1.69	1.6	3.2	4.8	9.6	7.8	6	1	8	1	306060L			▲	Δ	▲
												P	o	●	●	●
												M	-	o	●	●
												K	-	o	●	●
												N	-	-	●	●
												S	-	-	●	●
												H	-	-	-	-

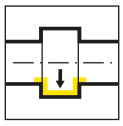

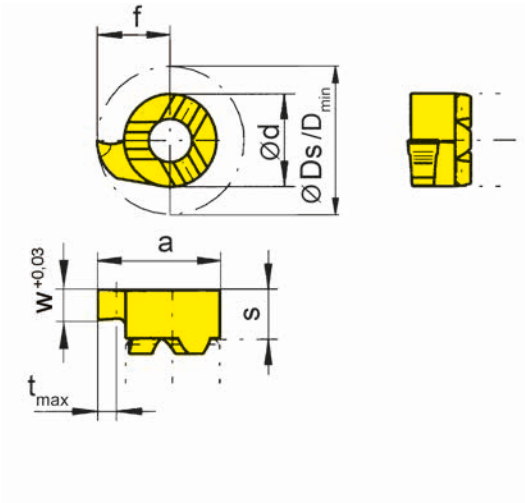

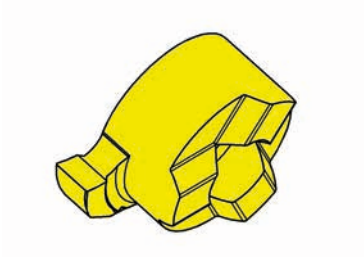

R=右手型-如图
R = right hand version shown

L=左手型
L = left hand version

▲ 库存
on stock

Δ 4周
4 weeks

硬质合金牌号
Carbide grades

产品型号 Part number	w	s	f	Ds	a	d	t_{max}	D_{min}	Z	HIS		MG12	EG55	TH35	TN35
R108.0150.00	1.5	3.2	4.8	9.6	7.8	6	1	8	1	306060R		▲	▲	▲	▲
R108.0200.00	2	3.2	4.8	9.6	7.8	6	1	8	1	306060R		▲	▲	▲	▲
L108.0150.00	1.5	3.2	4.8	9.6	7.8	6	1	8	1	306060L		▲		Δ	▲
L108.0200.00	2	3.2	4.8	9.6	7.8	6	1	8	1	306060L		▲		▲	▲
											P	o	●	●	●
											M	-	o	●	●
											K	-	o	●	●
											N	-	-	●	●
											S	-	-	●	●
											H	-	-	-	-

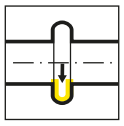

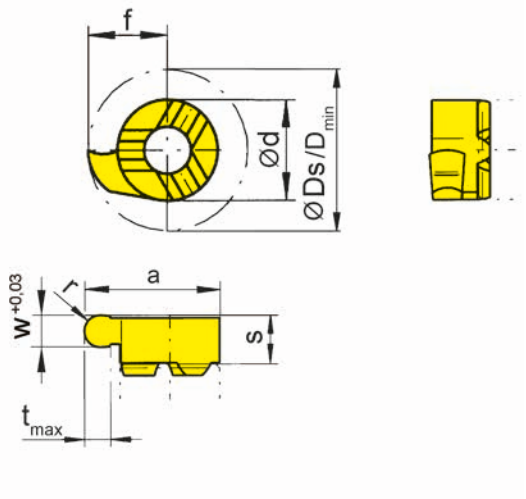

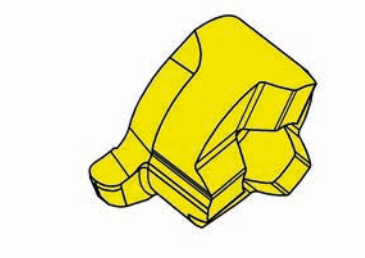

R=右手型-如图
R = right hand version shown

L=左手型
L = left hand version

硬质合金牌号
Carbide grades

▲ 库存
on stock

Δ 4周
4 weeks

产品型号 Part number	w	s	f	Ds	a	r	d	t_{max}	D_{min}	Z	HIS		MG12	EG55	TH35	TI25	TN35
R108.0004.08	0.8	3.2	4.8	9.6	7.8	0.4	6	1	8	1	306060R		▲	▲	▲		▲
R108.0006.12	1.2	3.2	4.8	9.6	7.8	0.6	6	1	8	1	306060R		▲	▲	▲		▲
R108.0009.18	1.8	3.2	4.8	9.6	7.8	0.9	6	1	8	1	306060R		▲	▲	▲	▲	▲
L108.0004.08	0.8	3.2	4.8	9.6	7.8	0.4	6	1	8	1	306060L		Δ	▲	▲		▲
L108.0006.12	1.2	3.2	4.8	9.6	7.8	0.6	6	1	8	1	306060L		▲	▲	▲		▲
L108.0009.18	1.8	3.2	4.8	9.6	7.8	0.9	6	1	8	1	306060L		Δ		▲	Δ	▲
												P	o	●	●	●	●
												M	-	o	●	●	●
												K	-	o	●	●	●
												N	-	-	●	●	●
												S	-	-	●	●	●
												H	-	-	-	-	-

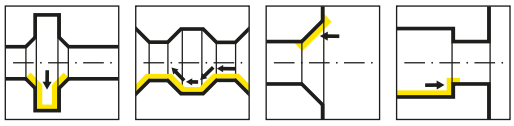

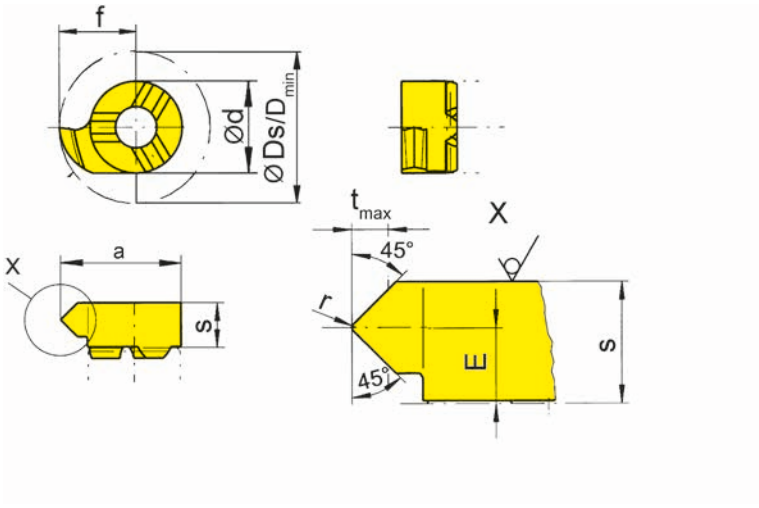

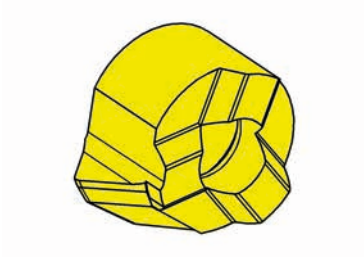

R=右手型-如图
R = right hand version shown

L=左手型
L = left hand version

硬质合金牌号
Carbide grades

▲ 库存
on stock

Δ 4周
4 weeks

产品型号 Part number	E	f	Ds	r	d	s	a	D_{min}	α	t_{max}	Z	HIS	EG55	TA45	TI25	TN35
R108.4545.02	1.8	4.65	9.3	0.2	6	3.6	7.65	7.8	45°	1.4	1	306060R	▲	▲	▲	▲
L108.4545.02	1.8	4.65	9.3	0.2	6	3.6	7.65	7.8	45°	1.4	1	306060L	▲	Δ	Δ	▲
												P	●	●	●	●
												M	o	●	●	●
												K	o	●	●	●
												N	-	●	●	●
												S	-	●	●	●
												H	-	-	-	-

z3

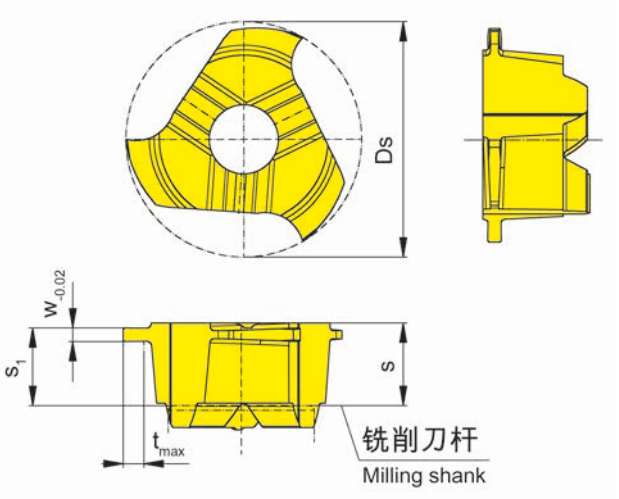

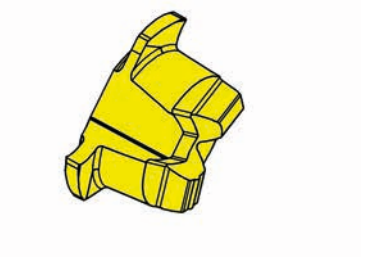

图示=右手型
Picture = right hand cutting version

硬质合金牌号
Carbide grades

▲ 库存
on stock

Δ 4周
4 weeks

产品型号 Part number	Ds	Nw	w	s	s_1	t_{max}	Z	HIS		TA45
306.0050.10.00	9.7	0.5	0.57	3.4	3.2	0.85	3	306060R		▲
306.0070.10.00	9.7	0.7	0.77	3.4	3.2	1.15	3	306060R		▲
									P	●
									M	●
									K	●
									N	●
									S	●
									H	-

无法进行端面切削，切削深度受限
not face cutting, limited depth of cut

z3

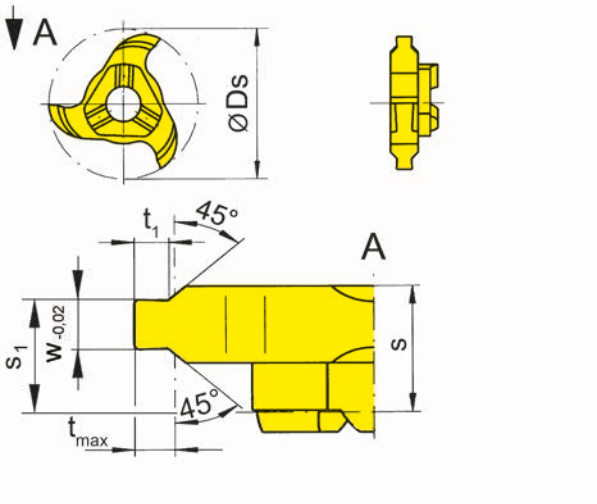

图示=右手型
Picture = right hand cutting version

硬质合金牌号
Carbide grades

▲ 库存
on stock

Δ 4周
4 weeks

产品型号 Part number	Ds	Nw	w	t_1	s	s_1	t_{max}	Z	HIS		AS45
306.1105.30	11.7	1.1	1.21	0.47	3.4	2.7	0.5	3	306060R		▲
306.1307.30	11.7	1.3	1.41	0.65	3.4	2.6	0.7	3	306060R		▲
										P	●
										M	●
										K	●
										N	o
										S	●
										H	-

z3

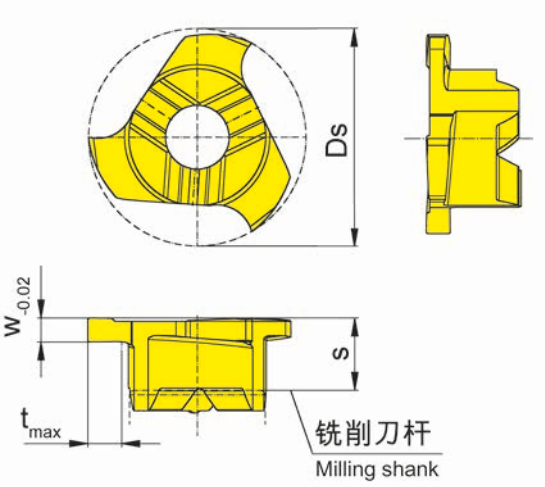

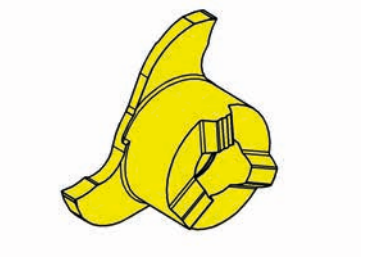

图示=右手型
Picture = right hand cutting version

硬质合金牌号
Carbide grades

▲ 库存
on stock

Δ 4周
4 weeks

产品型号 Part number	Ds	Nw	w	s	t_{max}	Z	HIS		AS45	TA45
306.0080.10.00	9.7	0.8	0.87	3.2	1.5	3	306060R			▲
306.0090.10.00	9.7	0.9	0.97	3.2	1.5	3	306060R			▲
306.0100.10.00	9.7	1	1.07	3.2	1.5	3	306060R			▲
306.0110.10.00	9.7	1.1	1.21	3.2	1.5	3	306060R			▲
306.0130.10.00	9.7	1.3	1.41	3.2	1.5	3	306060R		▲	▲
306.0160.10.00	9.7	1.6	1.71	3.2	1.5	3	306060R		▲	▲
								P	●	●
								M	●	●
								K	●	●
								N	o	●
								S	●	●
								H	-	-

z3

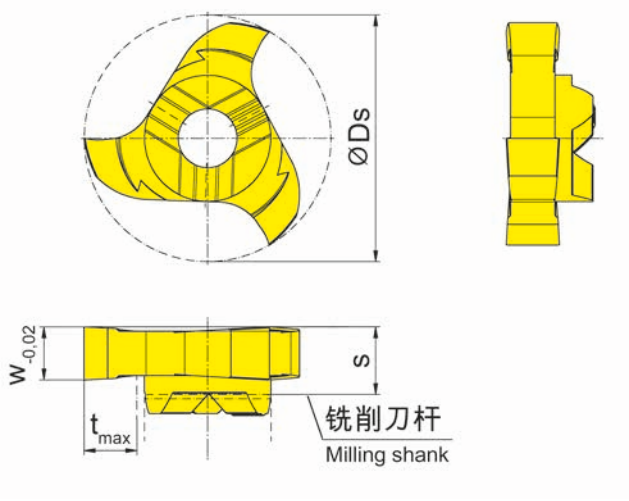

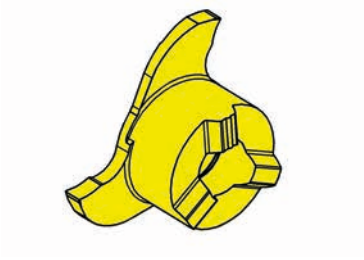

图示=右手型
Picture = right hand cutting version

硬质合金牌号
Carbide grades

▲ 库存
on stock

Δ 4周
4 weeks

产品型号 Part number	Ds	Nw	w	s	t_{max}	Z	HIS		MG12	TF45	TN35
306.0110.00	11.7	1.1	1.21	3.2	2.5	3	306060R		▲	▲	▲
306.0130.00	11.7	1.3	1.41	3.2	2.5	3	306060R		Δ	Δ	▲
306.0160.00	11.7	1.6	1.71	3.2	2.5	3	306060R		Δ	Δ	▲
								P	o	●	●
								M	-	●	●
								K	-	●	●
								N	-	●	●
								S	-	●	●
								H	-	-	-

.40 z3

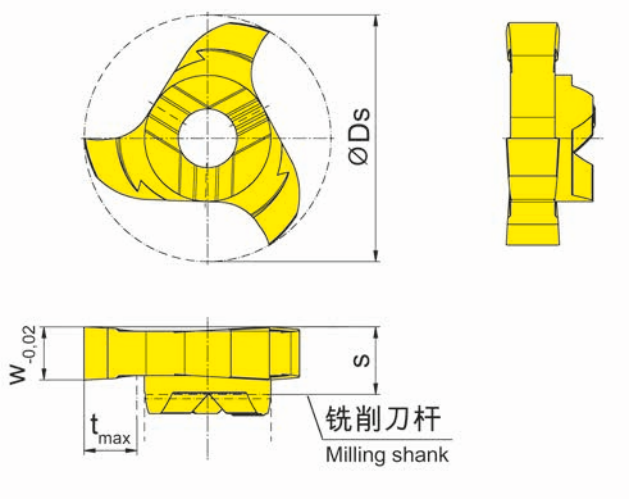

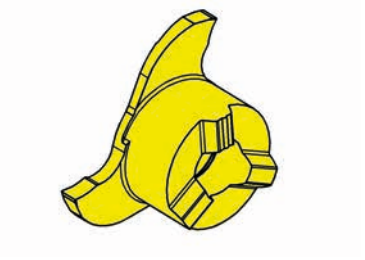

图示=右手型
Picture = right hand cutting version

硬质合金牌号
Carbide grades

▲ 库存
on stock

Δ 4周
4 weeks

产品型号 Part number	Ds	Nw	w	s	t_{max}	Z	HIS		TI25
306.0110.40	11.7	1.1	1.21	3.2	2.5	3	306060R		▲
306.0130.40	11.7	1.3	1.41	3.2	2.5	3	306060R		Δ
306.0160.40	11.7	1.6	1.71	3.2	2.5	3	306060R		▲
								P	-
								M	-
								K	-
								N	●
								S	-
								H	-

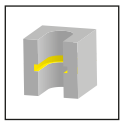

z3

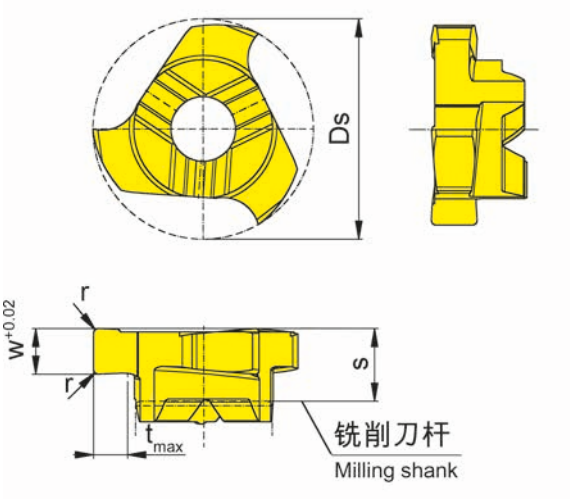

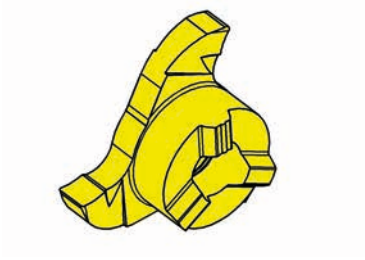

图示=右手型
Picture = right hand cutting version

硬质合金牌号
Carbide grades

▲ 库存
on stock

Δ 4周
4 weeks

产品型号 Part number	Ds	w	s	r	t_{max}	Z	HIS		AS45	TA45
306.0150.10.00	9.7	1.5	3.2	-	1.5	3	306060R		▲	▲
306.0200.10.00	9.7	2	3.2	0.2	1.5	3	306060R		▲	▲
								P	●	●
								M	●	●
								K	●	●
								N	o	●
								S	●	●
								H	-	-

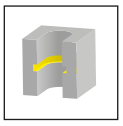

z3

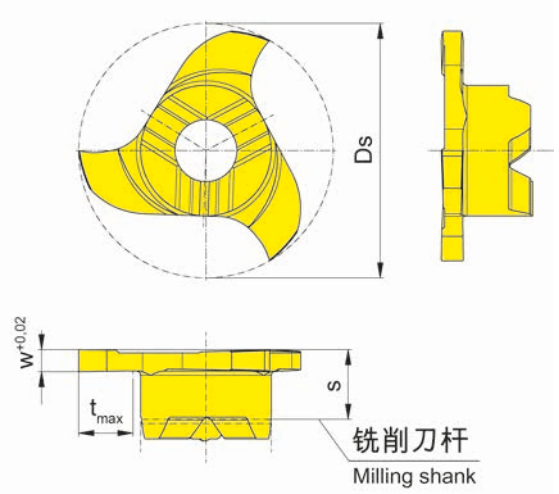

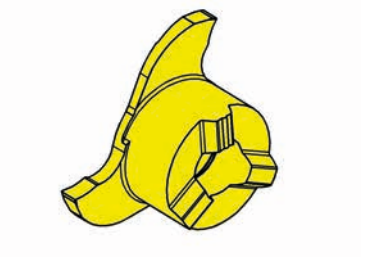

图示=右手型
Picture = right hand cutting version

硬质合金牌号
Carbide grades

▲ 库存
on stock

Δ 4周
4 weeks

产品型号 Part number	Ds	w	s	r	t_{max}	Z	HIS		MG12	AS45	TF45	TN35
306.0100.1.00	11.7	1	3.2	-	2.5	3	306060R					▲
306.0150.00	11.7	1.5	3.2	-	2.5	3	306060R		▲	▲	▲	▲
306.0150.02	11.7	1.5	3.2	0.2	2.5	3	306060R			▲		
306.0200.00	11.7	2	3.2	0.2	2.5	3	306060R		▲	▲	▲	▲
306.0250.00	11.7	2.5	3.2	0.2	2.5	3	306060R		▲	▲	▲	▲
306.0300.00	11.7	3	4.2	0.2	2.5	3	306060R			▲		▲
								P	o	●	●	●
								M	-	●	●	●
								K	-	●	●	●
								N	-	o	●	●
								S	-	●	●	●
								H	-	-	-	-

.40 | z3

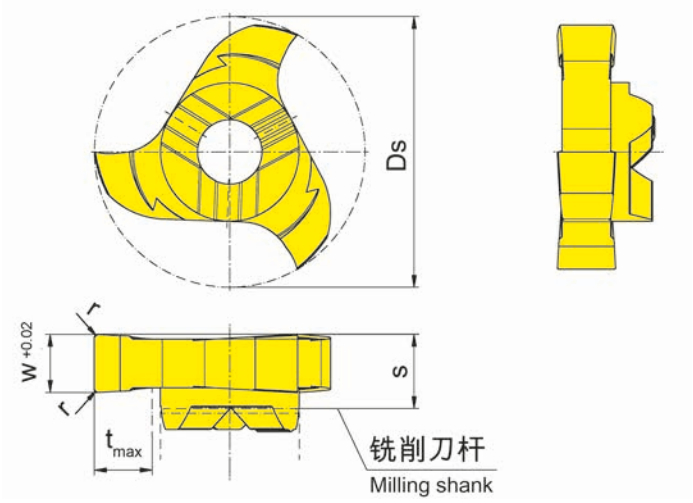

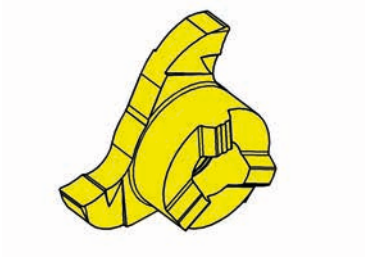

图示=右手型
Picture = right hand cutting version

硬质合金牌号
Carbide grades

▲ 库存
on stock

Δ 4周
4 weeks

产品型号 Part number	Ds	w	s	r	t_{max}	Z	HIS		TI25
306.0150.40	11.7	1.5	3.2	-	2.5	3	306060R		▲
306.0200.40	11.7	2	3.2	0.2	2.5	3	306060R		▲
306.0250.40	11.7	2.5	3.2	0.2	2.5	3	306060R		▲
								P	-
								M	-
								K	-
								N	●
								S	-
								H	-

z3

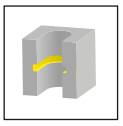

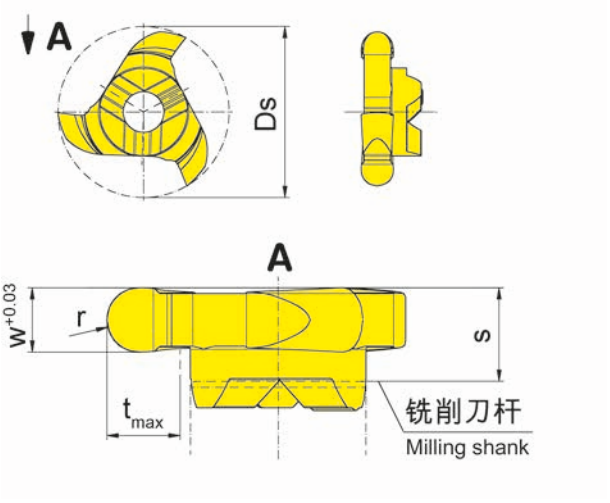

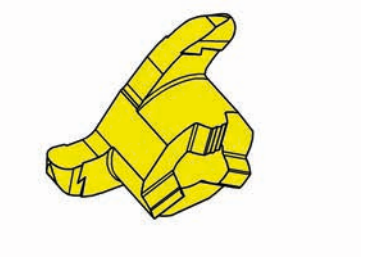

图示=右手型
Picture = right hand cutting version

硬质合金牌号
Carbide grades

▲ 库存
on stock

Δ 4周
4 weeks

产品型号 Part number	Ds	w	s	r	t_{max}	Z	HIS	MG12	AN25	AS45	RC45	TF45	TI25	TN35
306.0005.10	11.7	1	3.2	0.5	2.5	3	306060R		▲		▲			
306.0007.15	11.7	1.5	3.2	0.75	2.5	3	306060R			▲				
306.0010.20	11.7	2	3.2	1	2.5	3	306060R			▲				
306.0011.22	11.7	2.2	3.2	1.1	2.5	3	306060R	Δ		▲		Δ	▲	▲
306.0015.30	11.7	3	4.2	1.5	2.5	3	306060R			▲				
								P o	●	●	●	●	●	●
								M -	o	●	●	●	●	●
								K -	-	●	●	●	●	●
								N -	-	o	-	●	●	●
								S -	-	●	-	●	●	●
								H -	-	-	-	-	-	-

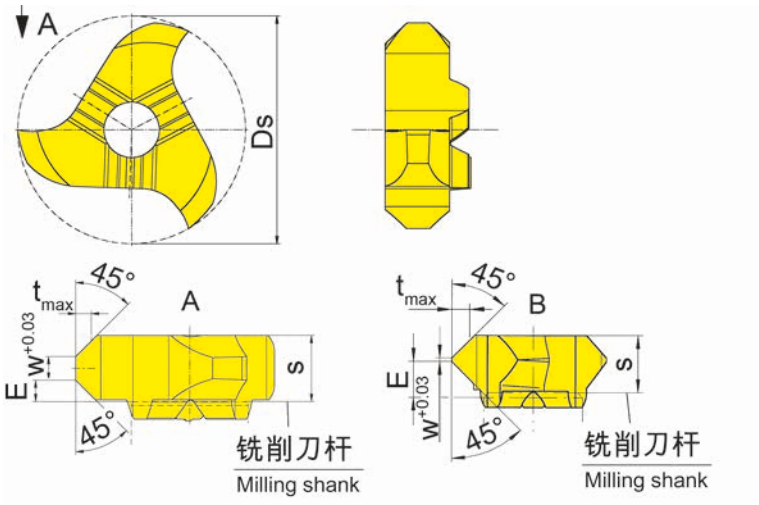

图示=右手型
Picture = right hand cutting version

硬质合金牌号
Carbide grades

▲ 库存
on stock

Δ 4周
4 weeks

产品型号 Part number	Ds	E	s	w	形式 Form	t_{max}	Z	HIS	MG12	TF45	TI25	TN35
306.4545.00	11.7	1.1	3.4	1.2	A	0.8	3	306060R	▲	▲	▲	▲
306.4593.20	9.3	1.6	3.4	0.2	B	1.4	3	306060R			▲	

	MG12	TF45	TI25	TN35
P	o	●	●	●
M	-	●	●	●
K	-	●	●	●
N	-	●	●	●
S	-	●	●	●
H	-	-	-	-

z6

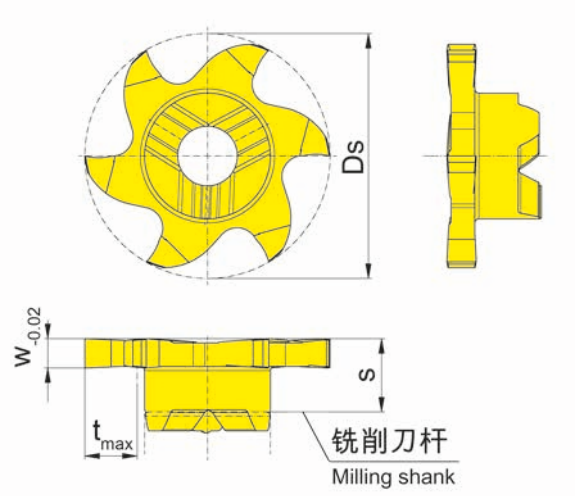

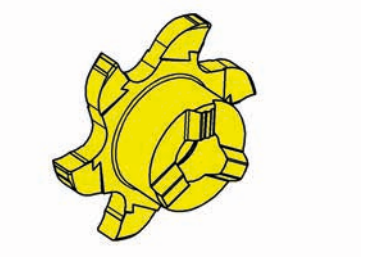

图示=右手型
Picture = right hand cutting version

硬质合金牌号
Carbide grades

▲ 库存
on stock

Δ 4周
4 weeks

产品型号 Part number	Ds	Nw	w	s	t_{max}	Z	HIS		AS45	TA45
606.0110.00	11.7	1.1	1.21	3.5	2.5	6	306060R			▲
606.0130.00	11.7	1.3	1.41	3.5	2.5	6	306060R			▲
606.0160.00	11.7	1.6	1.71	3.5	2.5	6	306060R		▲	▲
								P	●	●
								M	●	●
								K	●	●
								N	o	●
								S	●	●
								H	-	-

z6

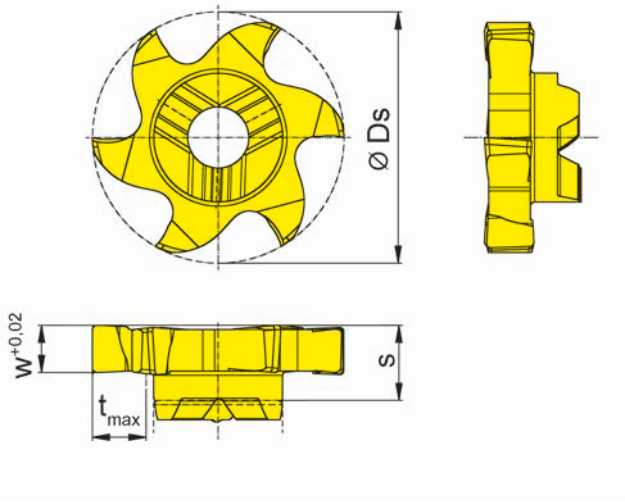

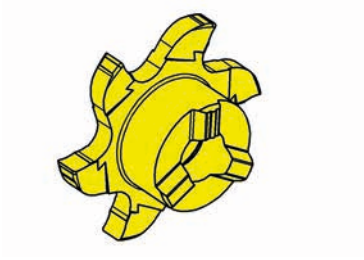

图示=右手型
Picture = right hand cutting version

硬质合金牌号
Carbide grades

▲ 库存
on stock

Δ 4周
4 weeks

产品型号 Part number	Ds	w	s	t_{max}	Z	HIS	AS45	EG35	IG35	TA45
606.0025.00	11.7	0.25	3.5	2.5	6	306060R		▲	Δ	
606.0030.00	11.7	0.3	3.5	2.5	6	306060R		▲	Δ	
606.0040.00	11.7	0.4	3.5	2.5	6	306060R		▲	Δ	
606.0050.00	11.7	0.5	3.5	2.5	6	306060R		▲	Δ	
606.0060.00	11.7	0.6	3.5	2.5	6	306060R		▲	Δ	
606.0070.00	11.7	0.7	3.5	2.5	6	306060R		▲	Δ	
606.0080.00	11.7	0.8	3.5	2.5	6	306060R		▲	Δ	
606.0090.00	11.7	0.9	3.5	2.5	6	306060R		▲	Δ	
606.0100.00	11.7	1	3.5	2.5	6	306060R		▲	Δ	
606.0150.00	11.7	1.5	3.5	2.5	6	306060R	▲			▲
606.0200.00	11.7	2	3.5	2.5	6	306060R	▲			▲
606.0250.00	11.7	2.5	3.5	2.5	6	306060R	▲			▲
						P	●	●	-	●
						M	●	●	●	●
						K	●	o	-	●
						N	o	-	-	●
						S	●	-	●	●
						H	-	-	-	-

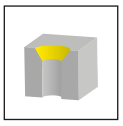

z6

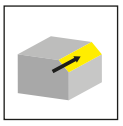

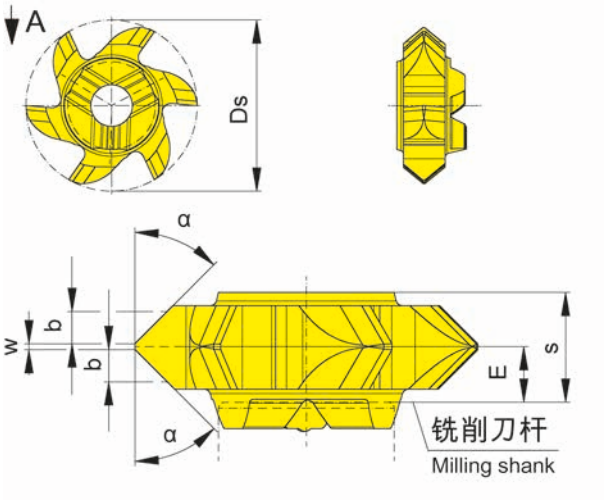

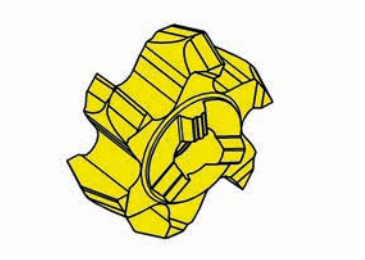

图示=右手型
Picture = right hand cutting version

硬质合金牌号
Carbide grades

▲ 库存
on stock

Δ 4周
4 weeks

产品型号 Part number	Ds	E	s	w	α	b	Z	HIS		TA45
606.1515.20	11.7	1.9	3.7	0.2	15°	1.5	6	306060R		Δ
606.2020.20	11.7	1.9	3.7	0.2	20°	1.5	6	306060R		▲
606.3030.20	11.7	1.9	3.7	0.2	30°	1.5	6	306060R		▲
606.4545.20	11.7	1.9	3.7	0.2	45°	1.1	6	306060R		▲
									P	●
									M	●
									K	●
									N	●
									S	●
									H	-

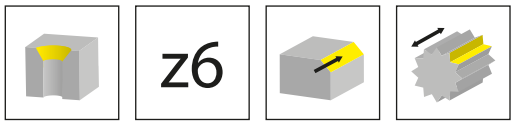

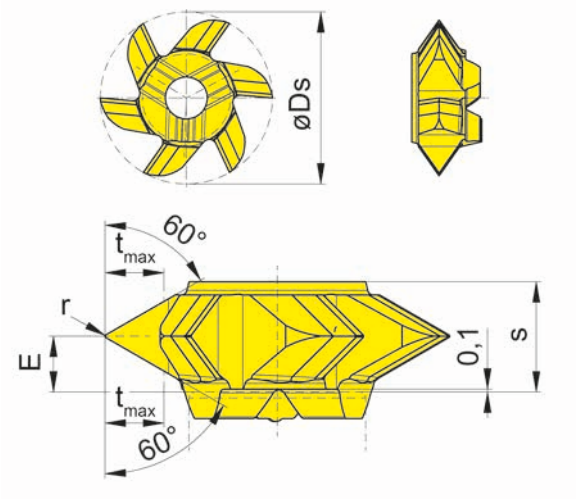

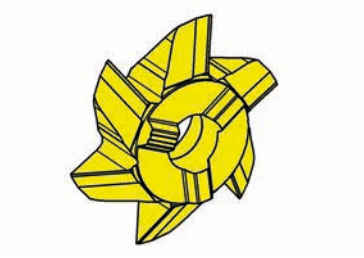

图示=右手型
Picture = right hand cutting version

硬质合金牌号
Carbide grades

▲ 库存
on stock

Δ 4周
4 weeks

产品型号 Part number	Ds	E	s	t_{max}	Z	HIS		AS45
606.6060.05	11.7	1.9	3.75	2	6	306060R		▲
							P	●
							M	●
							K	●
							N	o
							S	●
							H	-

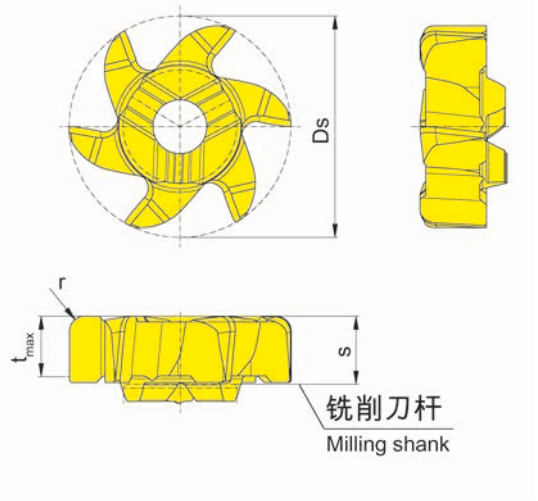

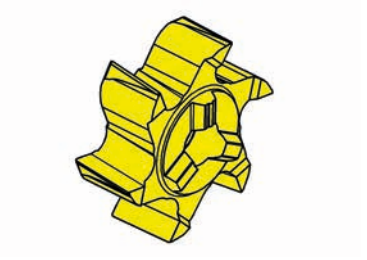

图示=右手型
Picture = right hand cutting version

硬质合金牌号
Carbide grades

▲ 库存
on stock

Δ 4周
4 weeks

产品型号 Part number	Ds	Z	r	t_{max}	s	HIS		AS45	TI25
606.PLT6.08	11.7	6	0.8	3.2	3.6	306060R		▲	▲
							P	●	●
							M	●	●
							K	●	●
							N	o	●
							S	●	●
							H	-	-

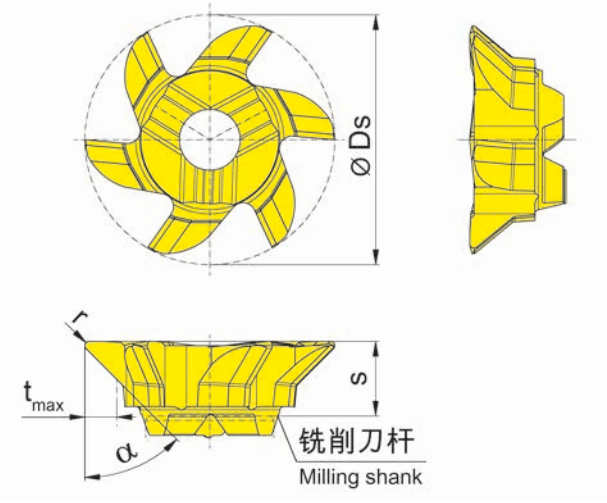

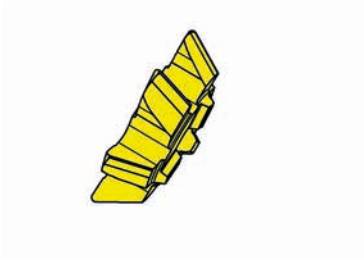

图示=右手型
Picture = right hand cutting version

硬质合金牌号
Carbide grades

▲ 库存
on stock

Δ 4周
4 weeks

产品型号 Part number	Ds	Z	r	α	t_{max}	s	HIS		AS45
606.0015.22	11.7	6	0.2	15°	0.7	3.5	306060R		▲
606.0030.22	11.7	6	0.2	30°	1.4	3.5	306060R		▲
606.0045.22	11.7	6	0.2	45°	1.5	3.5	306060R		▲
								P	●
								M	●
								K	●
								N	o
								S	●
								H	-

槽铣削(圆弧插补铣削)
Groove Milling by circular interpolation

铣刀杆
Milling shank
M308/M308.ST/
M308.ER

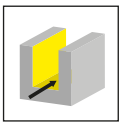

页/Page
68, 70-71

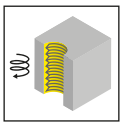

页/Page
69

常规刀柄
Basic Holder
WFB

页/Page
72

螺纹锁紧铣刀
Screw-in cutter
M308.M

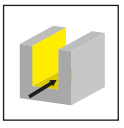

页/Page
73

刀片
Insert
111/308/608

页/Page
74-75, 79-80

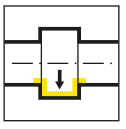

页/Page
76

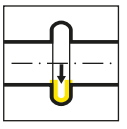

页/Page
77

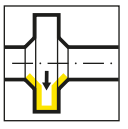

页/Page
78

页/Page
81, 83

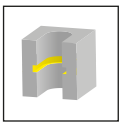

页/Page
82, 86

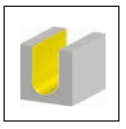

页/Page
84

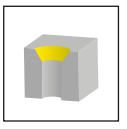

页/Page
85, 87

M308

铣刀杆

带可转位刀片

孔径自Ø 13.7 mm

Milling shank with exchangeable insert

from bore Ø 13,7 mm

铣刀杆
Milling shank

M308

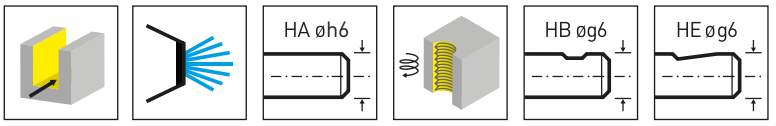

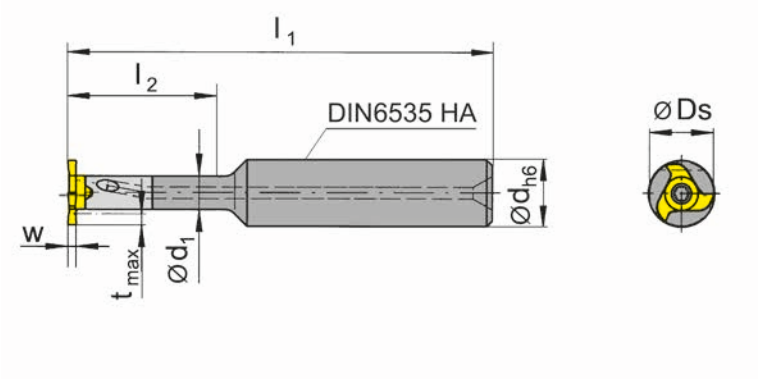

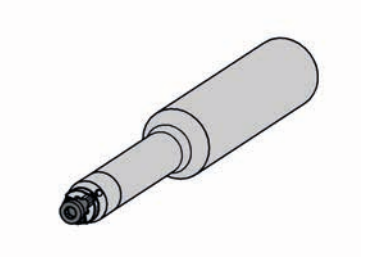

产品型号 Part number	d	l_1	l_2	d_1	形式 Form	HWS
M308.0012.01A	12	95	29	8	A	308080R • 308080L
M308.0012.02A	12	110	42	8	A	308080R • 308080L
M308.0012.03A	12	120	56	8	A	308080R • 308080L
M308.0012.07A	12	160	-	8	A	308080R • 308080L
M308.0012.01B	12	95	29	8	B	308080R • 308080L
M308.0012.02B	12	110	42	8	B	308080R • 308080L
M308.0012.03B	12	120	56	8	B	308080R • 308080L
M308.0012.01E	12	95	29	8	E	308080R • 308080L
M308.0012.02E	12	110	42	8	E	308080R • 308080L
M308.0012.03E	12	120	56	8	E	308080R • 308080L

w,Ds,tmax见刀片
w, Ds, tmax see inserts

配件
Spare Parts

铣刀杆 Milling shank	锁紧螺钉 Clamping Screw	TORX PLUS®扳手 TORX PLUS® Wrench
M308...	**3.5.12T10EP**	**T10PL**

铣刀杆
Milling shank

M308

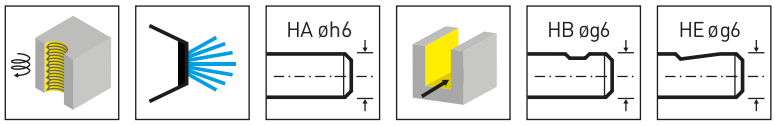

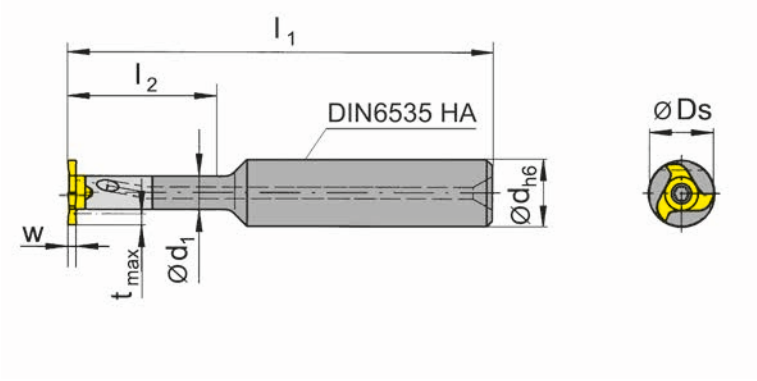

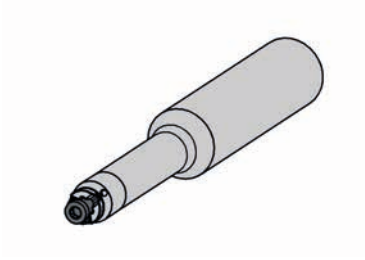

产品型号 Part number	d	l_1	l_2	d_1	形式 Form	HWS
M308.1012.02A	12	110	42	9.5	A	308080R • 308080L
M308.1016.01A	16	110	33	9.5	A	308080R • 308080L
M308.1016.02A	16	110	45	9.5	A	308080R • 308080L
M308.1016.03A	16	130	64	9.5	A	308080R • 308080L
M308.1012.02B	12	110	42	9.5	B	308080R • 308080L
M308.1016.01B	16	110	33	9.5	B	308080R • 308080L
M308.1016.02B	16	110	45	9.5	B	308080R • 308080L
M308.1016.03B	16	130	64	9.5	B	308080R • 308080L
M308.1012.02E	12	110	42	9.5	E	308080R • 308080L
M308.1016.01E	16	110	33	9.5	E	308080R • 308080L
M308.1016.02E	16	110	45	9.5	E	308080R • 308080L
M308.1016.03E	16	130	64	9.5	E	308080R • 308080L

w,Ds,tmax见刀片
w, Ds, tmax see inserts

配件
Spare Parts

铣刀杆 Milling shank	锁紧螺钉 Clamping Screw	TORX PLUS®扳手 TORX PLUS® Wrench
M308...	**3.5.12T10EP**	**T10PL**

铣刀杆
Milling shank

M308.ST

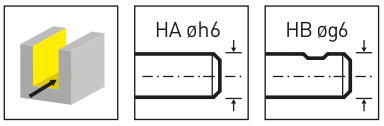

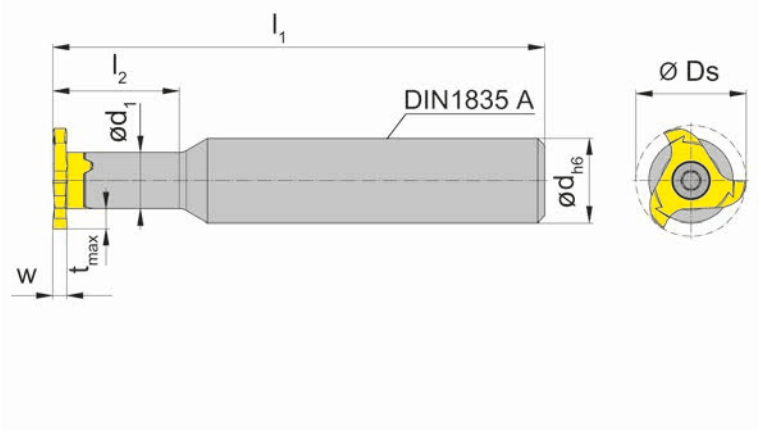

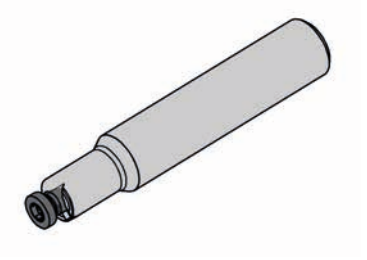

产品型号 Part number	d	l_1	l_2	d_1	形式 Form	HWS
M308.ST10.01A	10	60	18	8	A	308080R • 308080L
M308.ST12.01A	12	70	18	8	A	308080R • 308080L
M308.ST13.01A	13	70	26	8	A	308080R • 308080L
M308.ST10.01B	10	60	18	8	B	308080R • 308080L
M308.ST12.01B	12	70	18	8	B	308080R • 308080L

w,Ds,tmax见刀片
w, Ds, tmax see inserts

配件
Spare Parts

铣刀杆 Milling shank	锁紧螺钉 Clamping Screw	TORX PLUS®扳手 TORX PLUS® Wrench
M308...	**3.5.12T10EP**	**T10PL**

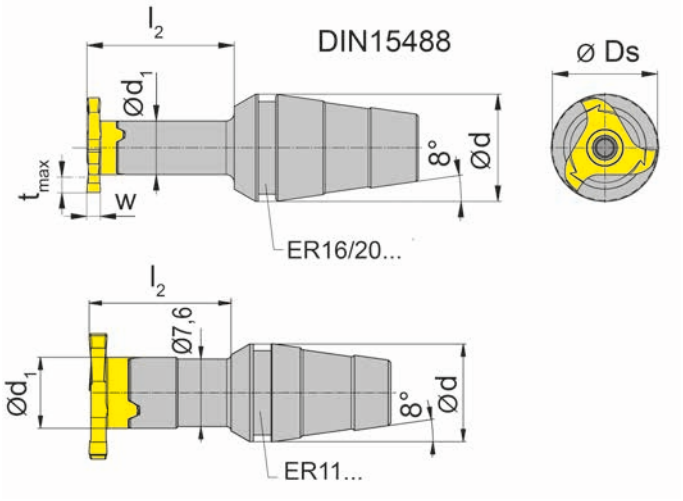

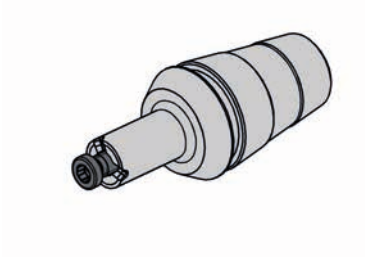

产品型号 Part number	d	l_2	d_1	锁紧螺母 Clamping nut	HWS
M308.ER11.02	11	16	8	ER11.6499	308080R • 308080L
M308.ER16.02	16	22	8	ER16.6499/ERM16.6499	308080R • 308080L
M308.ER20.02	20	22	8	ER20.6499/ERM20.6499	308080R • 308080L

w,Ds,tmax见刀片
w, Ds, tmax see inserts

铣刀杆不包含夹紧螺母-需要单独订购！
Clamping nut is not combined with milling shank - separate order required!

配件
Spare Parts

铣刀杆 Milling shank	锁紧螺钉 Clamping Screw	TORX PLUS®扳手 TORX PLUS® Wrench
M308...	**3.5.12T10EP**	**T10PL**

WFB

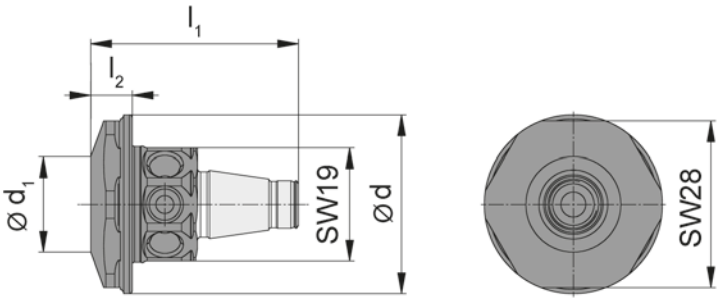

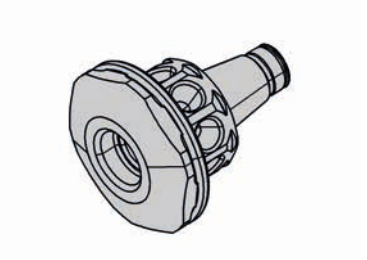

产品型号 Part number	l_1	l_2	d_1	d
WFB.2012.M081.01	35	7	16	30

配合螺纹锁紧型铣刀
for Screw-in cutter

螺纹锁紧铣刀
Screw-in cutter

M308.M

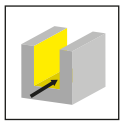

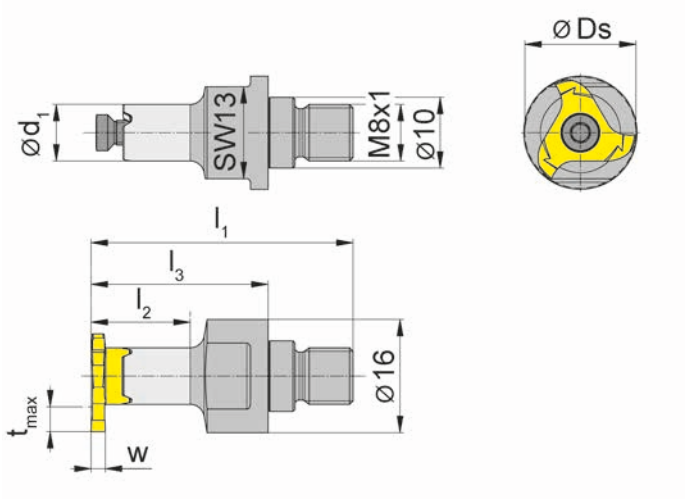

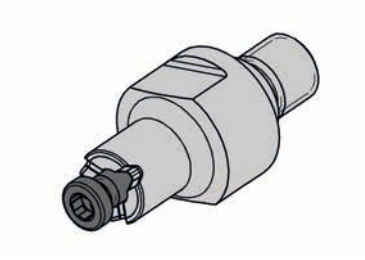

产品型号 Part number	l_1	l_2	l_3	d_1	SW	HWS	HMS
M308.M081.01	37	14	25	8	13	308080R • 308080L	8201

w,Ds,tmax见刀片
w, Ds, tmax see inserts

配件
Spare Parts

螺纹锁紧铣刀 Screw-in cutter	锁紧螺钉 Clamping Screw	TORX PLUS®扳手 TORX PLUS® Wrench
M308.M081.01	**3.5.12T10EP**	**T10PL**

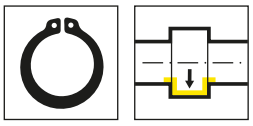

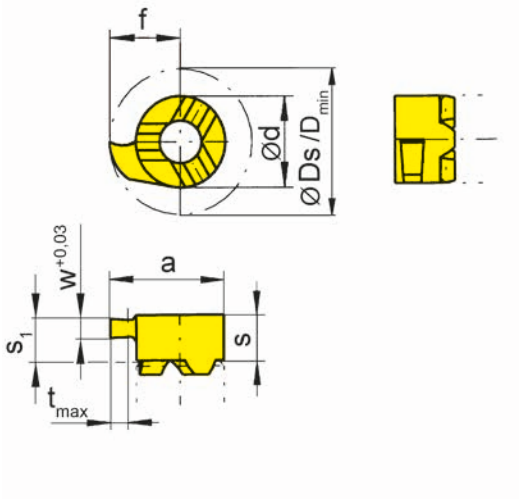

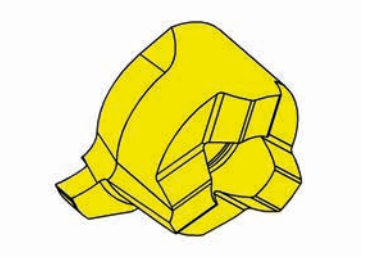

R=右手型-如图
R = right hand version shown

L=左手型
L = left hand version

▲ 库存
on stock

硬质合金牌号
Carbide grades

Δ 4周
4 weeks

产品型号 Part number	w	Nw	f	Ds	d	s	s_1	a	t_{max}	D_{min}	Z	HIS	MG12	EG55	TH35	TN35
R111.0070.00	0.74	0.7	6.7	13.4	8	4.15	3.95	10.7	1.2	11	1	308080R		▲	▲	▲
R111.0080.00	0.84	0.8	6.7	13.4	8	4.15	3.95	10.7	1.3	11	1	308080R		▲	▲	▲
R111.0090.00	0.94	0.9	6.7	13.4	8	4.15	3.95	10.7	1.5	11	1	308080R	▲	▲	▲	▲
L111.0070.00	0.74	0.7	6.7	13.4	8	4.15	3.95	10.7	1.2	11	1	308080L			Δ	▲
L111.0080.00	0.84	0.8	6.7	13.4	8	4.15	3.95	10.7	1.3	11	1	308080L			Δ	▲
L111.0090.00	0.94	0.9	6.7	13.4	8	4.15	3.95	10.7	1.5	11	1	308080L	▲		▲	▲

	MG12	EG55	TH35	TN35
P	o	●	●	●
M	-	o	●	●
K	-	o	●	●
N	-	-	●	●
S	-	-	●	●
H	-	-	-	-

无法进行端面切削，切削深度受限
not face cutting, limited depth of cut

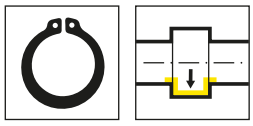

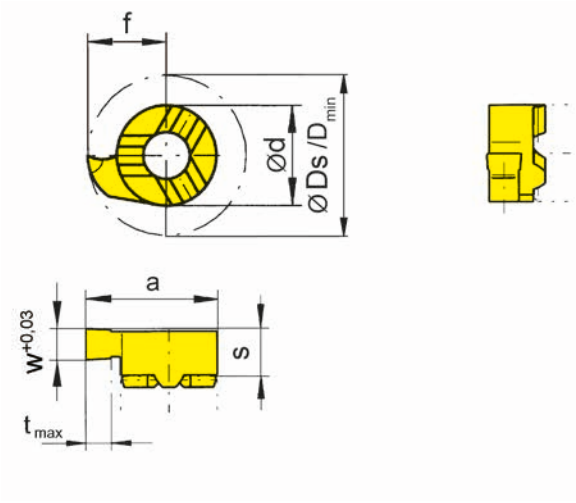

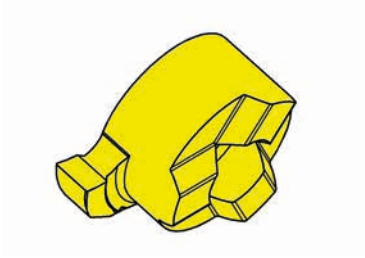

R=右手型-如图
R = right hand version shown

L=左手型
L = left hand version

▲ 库存
on stock

Δ 4周
4 weeks

硬质合金牌号
Carbide grades

产品型号 Part number	w	Nw	s	f	Ds	d	a	t_{max}	D_{min}	Z	HIS		MG12	EG55	TH35	TN35
R111.0110.00	1.19	1.1	3.95	6.7	13.4	8	10.7	2.3	11	1	308080R		▲	▲	▲	▲
R111.0130.00	1.39	1.3	3.95	6.7	13.4	8	10.7	2.3	11	1	308080R		▲	▲	▲	▲
R111.0160.00	1.69	1.6	3.95	6.7	13.4	8	10.7	2.3	11	1	308080R		▲	▲	▲	▲
L111.0110.00	1.19	1.1	3.95	6.7	13.4	8	10.7	2.3	11	1	308080L		▲	▲	▲	▲
L111.0130.00	1.39	1.3	3.95	6.7	13.4	8	10.7	2.3	11	1	308080L		Δ	Δ	▲	▲
L111.0160.00	1.69	1.6	3.95	6.7	13.4	8	10.7	2.3	11	1	308080L		Δ	▲	▲	▲
												P	o	●	●	●
												M	-	o	●	●
												K	-	o	●	●
												N	-	-	●	●
												S	-	-	●	●
												H	-	-	-	-

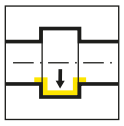

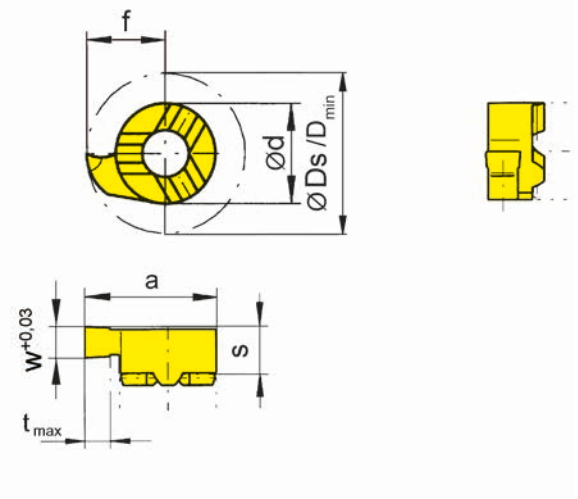

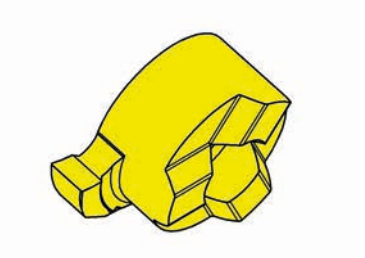

R=右手型-如图
R = right hand version shown

L=左手型
L = left hand version

▲ 库存
on stock

硬质合金牌号
Carbide grades

Δ 4周
4 weeks

产品型号 Part number	w	s	f	Ds	d	a	t_{max}	D_{min}	Z	HIS	MG12	EG55	TH35	TN35
R111.0150.00	1.5	3.95	6.7	13.4	8	10.7	2.3	11	1	308080R	▲	▲	▲	▲
R111.0200.00	2	3.95	6.7	13.4	8	10.7	2.3	11	1	308080R	▲	▲	▲	▲
R111.0250.00	2.5	3.95	6.7	13.4	8	10.7	2.3	11	1	308080R	▲	▲	▲	▲
R111.0300.00	3	3.95	6.7	13.4	8	10.7	2.3	11	1	308080R	▲	▲	▲	▲
L111.0150.00	1.5	3.95	6.7	13.4	8	10.7	2.3	11	1	308080L	▲	▲	▲	▲
L111.0200.00	2	3.95	6.7	13.4	8	10.7	2.3	11	1	308080L	▲	▲	▲	▲
L111.0250.00	2.5	3.95	6.7	13.4	8	10.7	2.3	11	1	308080L	▲		▲	▲
L111.0300.00	3	3.95	6.7	13.4	8	10.7	2.3	11	1	308080L	▲	▲	▲	▲

	MG12	EG55	TH35	TN35
P	o	●	●	●
M	-	o	●	●
K	-	o	●	●
N	-	-	●	●
S	-	-	●	●
H	-	-	-	-

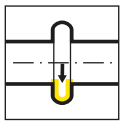

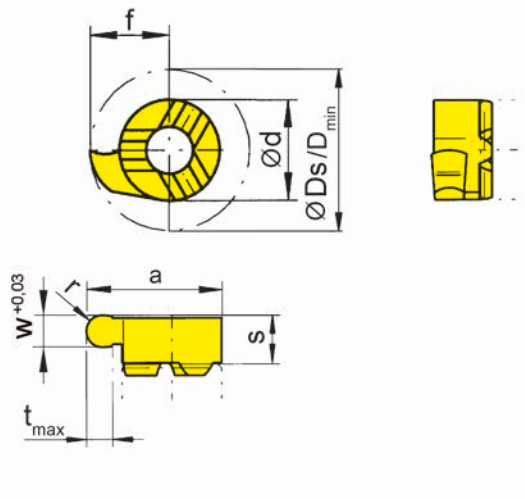

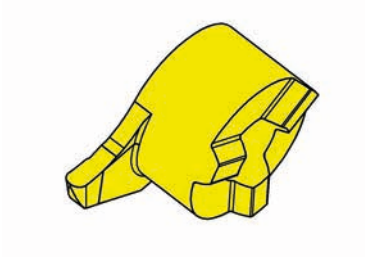

R=右手型-如图
R = right hand version shown

L=左手型
L = left hand version

▲ 库存
on stock

Δ 4周
4 weeks

硬质合金牌号
Carbide grades

产品型号 Part number	w	f	Ds	r	d	s	a	t_{max}	D_{min}	Z	HIS		MG12	EG55	TH35	TN35
R111.0004.08	0.8	6.7	13.4	0.4	8	3.95	10.7	2.3	11	1	308080R			▲	▲	▲
R111.0006.12	1.2	6.7	13.4	0.6	8	3.95	10.7	2.3	11	1	308080R		▲	▲	▲	▲
R111.0009.18	1.8	6.7	13.4	0.9	8	3.95	10.7	2.3	11	1	308080R		▲	▲	▲	▲
R111.0010.20	2	6.7	13.4	1	8	3.95	10.7	2.3	11	1	308080R		▲	▲	▲	▲
R111.0015.30	3	6.7	13.4	1.5	8	3.95	10.7	2.3	11	1	308080R		▲	▲	▲	▲
L111.0004.08	0.8	6.7	13.4	0.4	8	3.95	10.7	2.3	11	1	308080L			▲	▲	▲
L111.0006.12	1.2	6.7	13.4	0.6	8	3.95	10.7	2.3	11	1	308080L		Δ	▲	▲	▲
L111.0009.18	1.8	6.7	13.4	0.9	8	3.95	10.7	2.3	11	1	308080L		Δ		▲	▲
L111.0010.20	2	6.7	13.4	1	8	3.95	10.7	2.3	11	1	308080L		▲		▲	▲
L111.0015.30	3	6.7	13.4	1.5	8	3.95	10.7	2.3	11	1	308080L		Δ		▲	▲
												P	o	●	●	●
												M	-	o	●	●
												K	-	o	●	●
												N	-	-	●	●
												S	-	-	●	●
												H	-	-	-	-

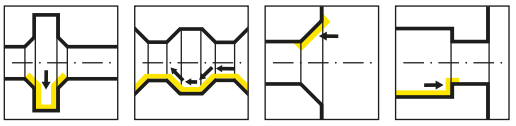

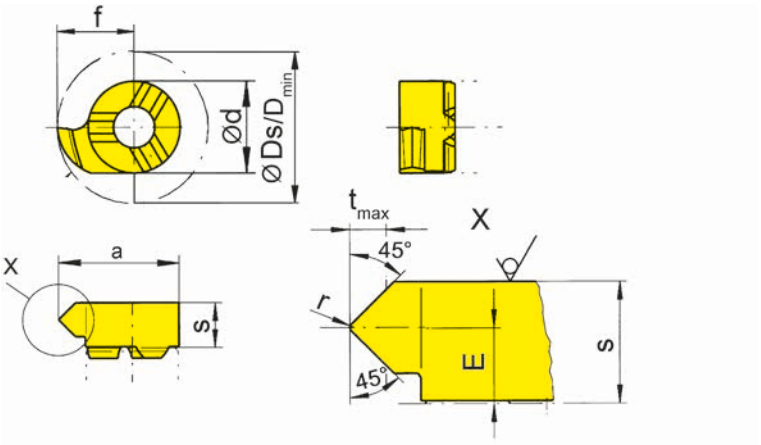

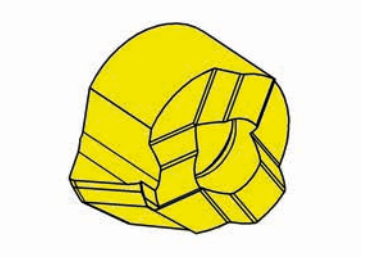

R=右手型-如图
R = right hand version shown

L=左手型
L = left hand version

▲ 库存
on stock

硬质合金牌号
Carbide grades

Δ 4周
4 weeks

产品型号 Part number	E	f	Ds	r	d	s	a	t_{max}	D_{min}	Z	HIS		EG55	TN35
R111.4545.02	2.4	6.7	13.4	0.2	8	4.15	10.7	1.5	11	1	308080R		▲	▲
L111.4545.02	2.4	6.7	13.4	0.2	8	4.15	10.7	1.5	11	1	308080L		▲	▲
												P	●	●
												M	o	●
												K	o	●
												N	-	●
												S	-	●
												H	-	-

z3

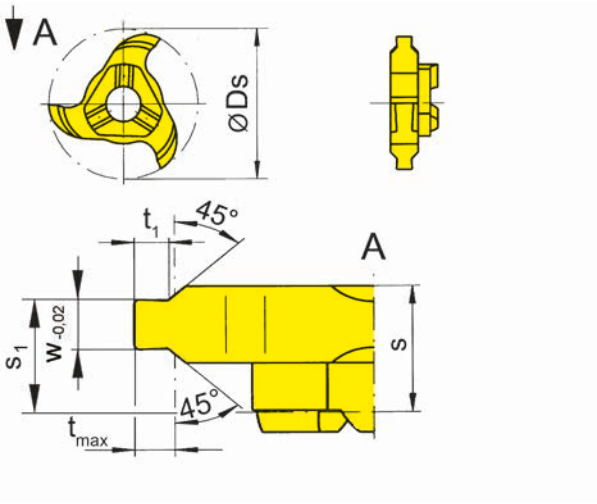

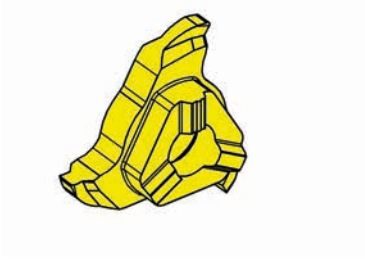

图示=右手型
Picture = right hand cutting version

硬质合金牌号
Carbide grades

▲ 库存
on stock

Δ 4周
4 weeks

产品型号 Part number	Ds	Nw	w	t_1	s	s_1	t_{max}	Z	HIS		AS45
308.1105.30	15.7	1.1	1.21	0.47	4.7	3.6	0.5	3	308080R		▲
308.1307.30	15.7	1.3	1.41	0.65	4.7	3.5	0.7	3	308080R		▲
										P	●
										M	●
										K	●
										N	o
										S	●
										H	-

z3

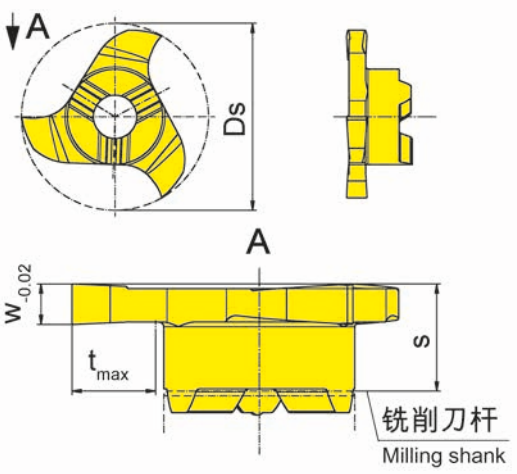

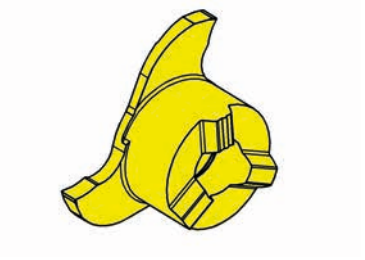

图示=右手型
Picture = right hand cutting version

硬质合金牌号
Carbide grades

▲ 库存
on stock

Δ 4周
4 weeks

产品型号 Part number	Ds	Nw	w	s	t_{max}	Z	HIS		AS45	TF45	TN35
308.0110.00	15.7	1.1	1.21	4.5	3.5	3	308080R			▲	▲
308.0130.00	15.7	1.3	1.41	4.5	3.5	3	308080R		Δ	Δ	▲
308.0160.00	15.7	1.6	1.71	4.5	3.5	3	308080R		Δ	Δ	▲
								P	●	●	●
								M	●	●	●
								K	●	●	●
								N	o	●	●
								S	●	●	●
								H	-	-	-

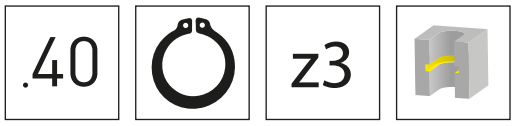

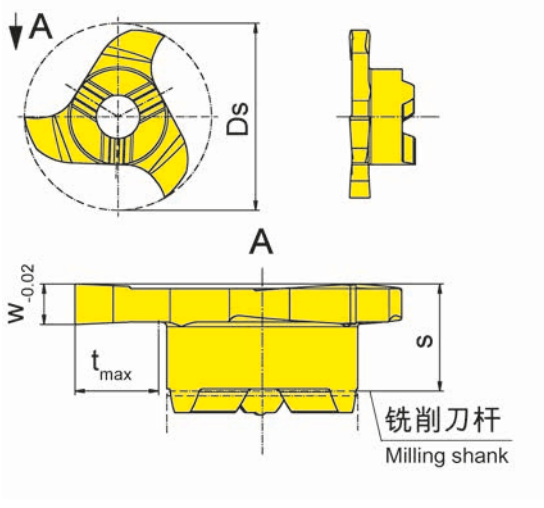

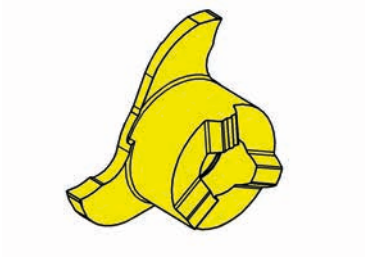

硬质合金牌号
Carbide grades

图示=右手型
Picture = right hand cutting version

▲ 库存
on stock

Δ 4周
4 weeks

产品型号 Part number	Ds	Nw	w	s	t_{max}	Z	HIS		TI25
308.0110.40	15.7	1.1	1.21	4.5	3.5	3	308080R		▲
308.0130.40	15.7	1.3	1.41	4.5	3.5	3	308080R		▲
308.0160.40	15.7	1.6	1.71	4.5	3.5	3	308080R		▲
								P	-
								M	-
								K	-
								N	●
								S	-
								H	-

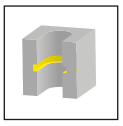

z3

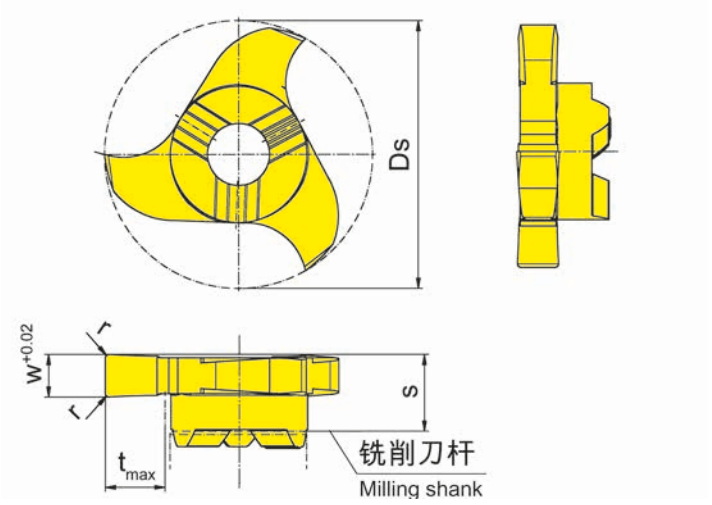

图示=右手型
Picture = right hand cutting version

硬质合金牌号
Carbide grades

▲ 库存
on stock

Δ 4周
4 weeks

产品型号 Part number	Ds	w	s	r	t_{max}	Z	HIS		MG12	AS45	TF45	TN35
308.0150.00	15.7	1.5	4.5	-	3.5	3	308080R		▲	▲	▲	▲
308.0200.00	15.7	2	4.5	0.2	3.5	3	308080R		Δ	▲	Δ	▲
308.0250.00	15.7	2.5	4.5	0.2	3.5	3	308080R		▲	▲	▲	▲
								P	o	●	●	●
								M	-	●	●	●
								K	-	●	●	●
								N	-	o	●	●
								S	-	●	●	●
								H	-	-	-	-

可以提供浅切深的槽宽0.5mm以下的刀片。
Inserts for widths of groove tmax down to 0,5 mm can be delivered with reduced depth upon request.

.40 | z3

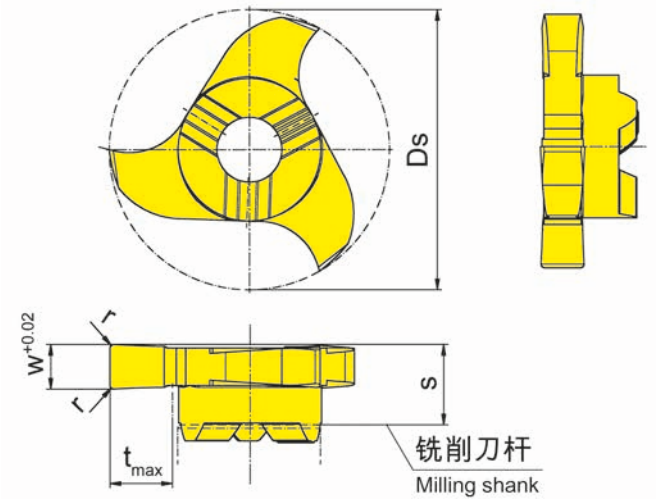

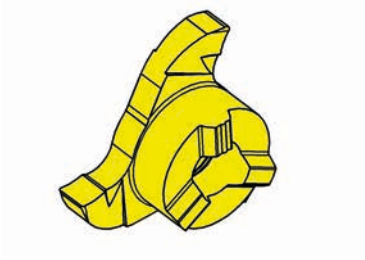

图示=右手型
Picture = right hand cutting version

硬质合金牌号
Carbide grades

▲ 库存
on stock

Δ 4周
4 weeks

产品型号 Part number	Ds	w	s	r	t_{max}	Z	HIS		TI25
308.0150.40	15.7	1.5	4.5	-	3.5	3	308080R		▲
308.0200.40	15.7	2	4.5	0.2	3.5	3	308080R		▲
308.0250.40	15.7	2.5	4.5	0.2	3.5	3	308080R		▲
								P	-
								M	-
								K	-
								N	●
								S	-
								H	-

可以提供浅切深的槽宽0.5mm以下的刀片。
Inserts for widths of groove tmax down to 0,5 mm can be delivered with reduced depth upon request.

z3

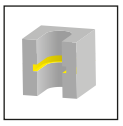

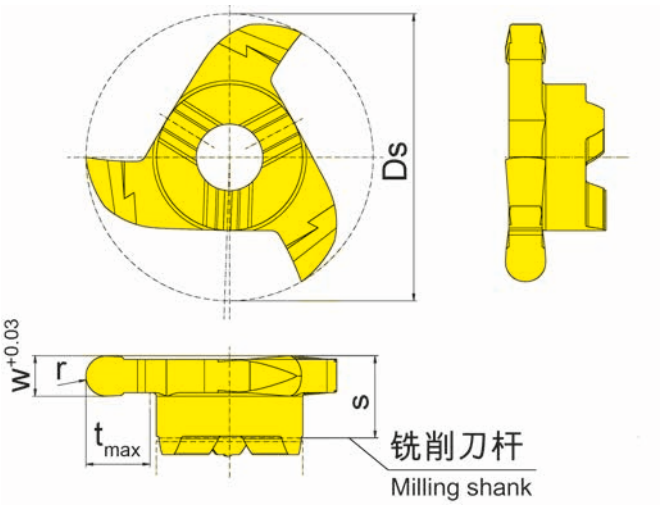

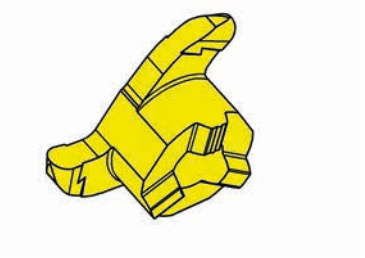

图示=右手型
Picture = right hand cutting version

硬质合金牌号
Carbide grades

▲ 库存
on stock

Δ 4周
4 weeks

产品型号 Part number	Ds	w	s	r	t_{max}	Z	HIS	MG12	AN25	AS45	RC45	TF45	TI25	TN35
308.0005.10	15.7	1	4.5	0.5	3.5	3	308080R		▲		▲			
308.0007.15	15.7	1.5	4.5	0.75	3.5	3	308080R			▲				
308.0010.20	15.7	2	4.5	1	3.5	3	308080R			▲				
308.0011.22	15.7	2.2	4.5	1.1	3.5	3	308080R	Δ		▲		▲	Δ	▲
308.0015.30	15.7	3	4.5	1.5	3.5	3	308080R			▲				
308.0020.40	15.7	4	4.5	2	3.5	3	308080R			▲				

	MG12	AN25	AS45	RC45	TF45	TI25	TN35
P	o	●	●	●	●	●	●
M	-	o	●	●	●	●	●
K	-	-	●	●	●	●	●
N	-	-	o	-	●	●	●
S	-	-	●	-	●	●	●
H	-	-	-	-	-	-	-

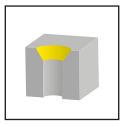

z3

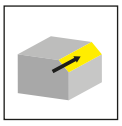

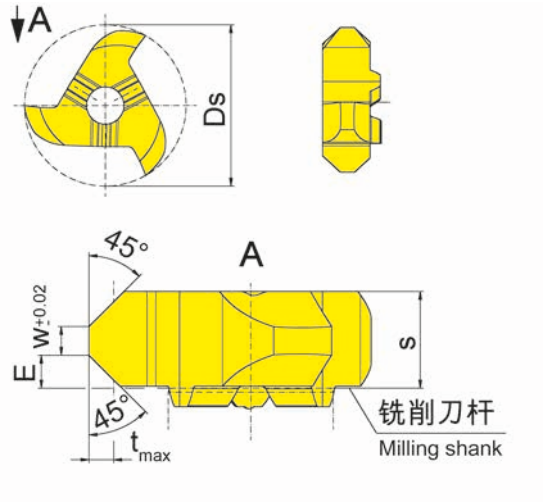

图示=右手型
Picture = right hand cutting version

硬质合金牌号
Carbide grades

▲ 库存
on stock

Δ 4周
4 weeks

产品型号 Part number	Ds	E	s	w	t_{max}	Z	HIS		MG12	TF45	TI25	TN35
308.4545.00	15.7	1.6	4.7	1.4	1.2	3	308080R		Δ	Δ		▲
								P	o	●	●	●
								M	-	●	●	●
								K	-	●	●	●
								N	-	●	●	●
								S	-	●	●	●
								H	-	-	-	-

z6

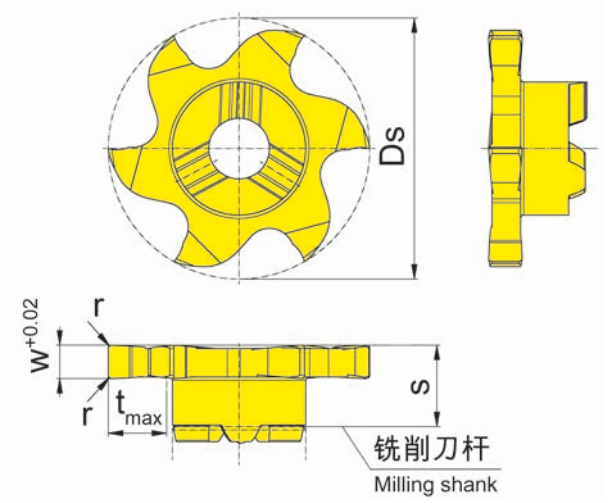

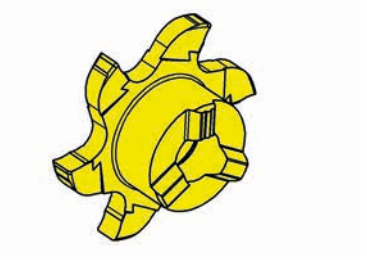

图示=右手型
Picture = right hand cutting version

▲ 库存
on stock

Δ 4周
4 weeks

硬质合金牌号
Carbide grades

产品型号 Part number	Ds	w	s	r	t_{max}	Z	HIS		AS45	EG35	IG35	TI25
608.0025.00	15.7	0.25	4.9	-	3.5	6	308080R			▲	Δ	
608.0030.00	15.7	0.3	4.9	-	3.5	6	308080R			▲	Δ	
608.0040.00	15.7	0.4	4.9	-	3.5	6	308080R			▲	Δ	
608.0050.00	15.7	0.5	4.9	-	3.5	6	308080R			▲	Δ	
608.0060.00	15.7	0.6	4.9	-	3.5	6	308080R			▲	Δ	
608.0070.00	15.7	0.7	4.9	-	3.5	6	308080R			▲	Δ	
608.0080.00	15.7	0.8	4.9	-	3.5	6	308080R			▲	Δ	
608.0090.00	15.7	0.9	4.9	-	3.5	6	308080R			▲	Δ	
608.0100.00	15.7	1	4.9	-	3.5	6	308080R			▲	Δ	
608.0150.00	15.7	1.5	4.9	-	3.5	6	308080R		▲			▲
608.0200.00	15.7	2	4.9	0.2	3.5	6	308080R		▲			▲
608.0250.00	15.7	2.5	4.9	0.2	3.5	6	308080R		▲			▲
								P	●	●	-	●
								M	●	●	●	●
								K	●	o	-	●
								N	o	-	-	●
								S	●	-	●	●
								H	-	-	-	-

可以提供浅切深的槽宽0.5mm以下的刀片。
Inserts for widths of groove tmax down to 0,5 mm can be delivered with reduced depth upon request.

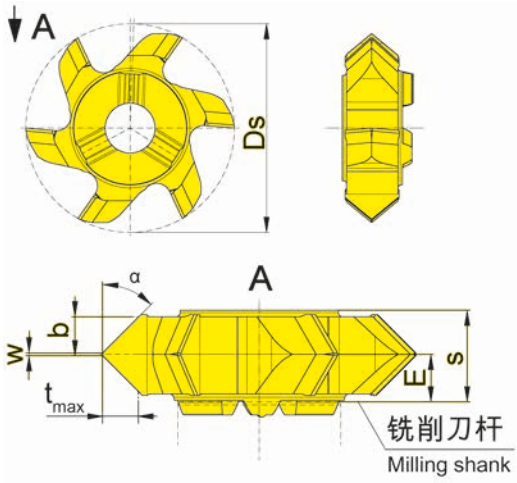

图示=右手型
Picture = right hand cutting version

▲ 库存
on stock

Δ 4周
4 weeks

产品型号 Part number	Ds	E	s	w	α	b	t_{max}	Z	HIS	硬质合金牌号 Carbide grades TA45	TI25
608.1515.20	15.7	2.6	5.1	0.2	15°	2.2	0.6	6	308080R	▲	
608.2020.20	15.7	2.6	5.1	0.2	20°	2.2	0.8	6	308080R	▲	
608.3030.20	15.7	2.6	5.1	0.2	30°	2.2	1.3	6	308080R	▲	
608.4545.20	15.7	2.6	5.1	0.2	45°	1.7	1.7	6	308080R		▲
P										●	●
M										●	●
K										●	●
N										●	●
S										●	●
H										-	-

槽铣削(圆弧插补铣削)
Groove Milling by circular interpolation

铣刀杆
Milling shank
M311/M311.ST/M311.ER

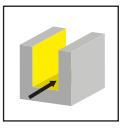

页/Page
90, 92-94

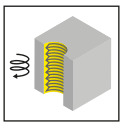

页/Page
91

常规刀柄
Basic Holder
WFB

页/Page
95

螺纹锁紧铣刀
Screw-in cutter
M311.M

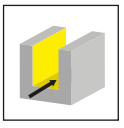

页/Page
96

刀片
Insert
311/611/911

页/Page
97-98, 104

页/Page
99, 101

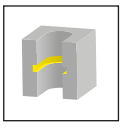

页/Page
100, 105, 108

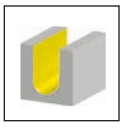

页/Page
102

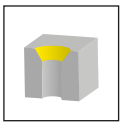

页/Page
103, 107

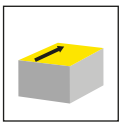

页/Page
106

M311

铣刀杆

带可转位刀片

孔径自Ø 18 mm

Milling shank with exchangeable insert

from bore Ø 18 mm

铣刀杆
Milling shank

M311

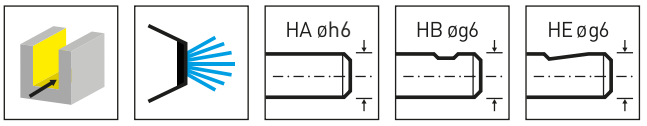

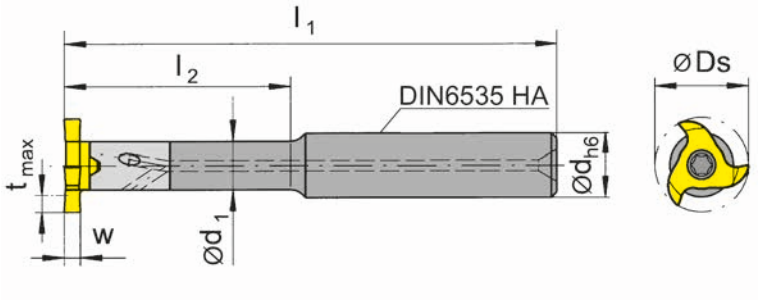

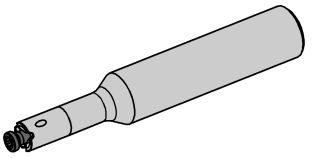

产品型号 Part number	d	l_1	l_2	d_1	形式 Form	HWS
M311.0012.01A	12	100	32	9	A	311090R
M311.0012.02A	12	100	45	9	A	311090R
M311.0012.03A	12	120	64	9	A	311090R
M311.0016.01A	16	100	32	9	A	311090R
M311.0016.02A	16	110	45	9	A	311090R
M311.0016.03A	16	130	64	9	A	311090R
M311.0012.01B	12	100	32	9	B	311090R
M311.0012.02B	12	100	45	9	B	311090R
M311.0012.03B	12	120	64	9	B	311090R
M311.0016.01B	16	100	32	9	B	311090R
M311.0016.02B	16	110	45	9	B	311090R
M311.0016.03B	16	130	64	9	B	311090R
M311.0012.01E	12	100	32	9	E	311090R
M311.0012.02E	12	100	45	9	E	311090R
M311.0012.03E	12	120	64	9	E	311090R
M311.0016.01E	16	100	32	9	E	311090R
M311.0016.02E	16	110	45	9	E	311090R
M311.0016.03E	16	130	64	9	E	311090R

w,Ds,tmax见刀片
w, Ds, tmax see inserts

配件
Spare Parts

铣刀杆 Milling shank	锁紧螺钉 Clamping Screw	TORX PLUS®扳手 TORX PLUS® Wrench
M311...	**4.14T15P**	**T15PQ**

铣刀杆
Milling shank

M311

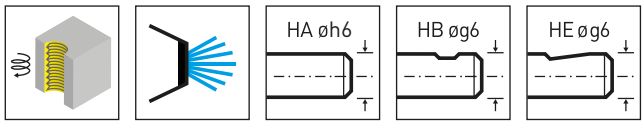

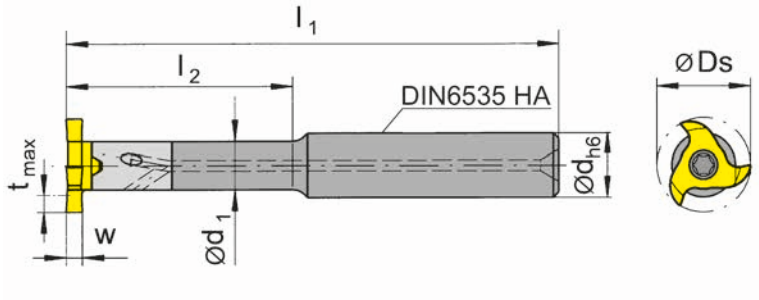

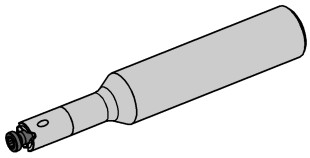

产品型号 Part number	d	l_1	l_2	d_1	形式 Form	HWS
M311.1316.01A	16	110	32	13	A	311090R
M311.1316.02A	16	130	45	13	A	311090R
M311.1316.03A	16	145	64	13	A	311090R
M311.1316.01B	16	110	32	13	B	311090R
M311.1316.02B	16	130	45	13	B	311090R
M311.1316.03B	16	145	64	13	B	311090R
M311.1316.01E	16	110	32	13	E	311090R
M311.1316.02E	16	130	45	13	E	311090R
M311.1316.03E	16	145	64	13	E	311090R

w,Ds,tmax见刀片
w, Ds, tmax see inserts

配件
Spare Parts

铣刀杆 Milling shank	锁紧螺钉 Clamping Screw	TORX PLUS®扳手 TORX PLUS® Wrench
M311...	**4.14T15P**	**T15PQ**

铣刀杆
Milling shank

M311.ST

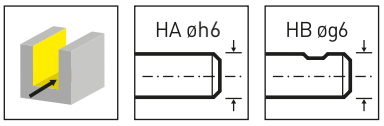

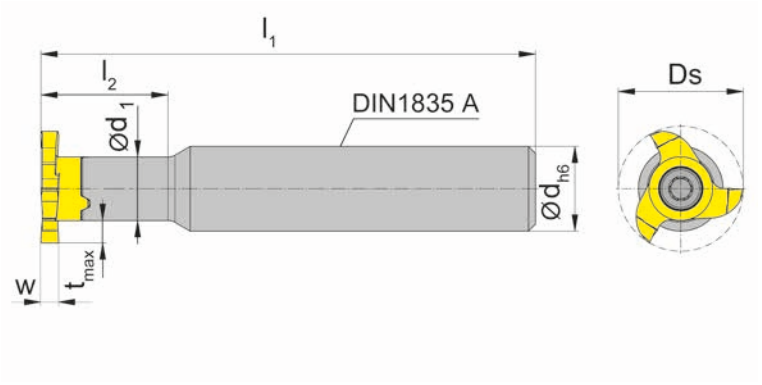

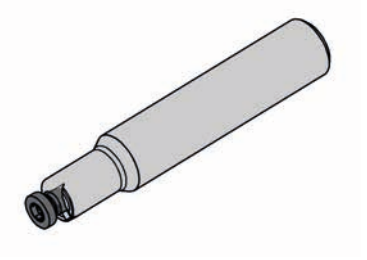

产品型号 Part number	d	l_1	l_2	d_1	形式 Form	HWS
M311.ST10.01A	10	60	18	9	A	311090R
M311.ST12.01A	12	70	18	9	A	311090R
M311.ST13.01A	13	70	26	9	A	311090R
M311.ST16.01A	16	80	26	9	A	311090R
M311.ST10.01B	10	60	18	9	B	311090R
M311.ST12.01B	12	70	18	9	B	311090R
M311.ST16.01B	16	80	26	9	B	311090R

w,Ds,tmax见刀片
w, Ds, tmax see inserts

配件
Spare Parts

铣刀杆 Milling shank	锁紧螺钉 Clamping Screw	TORX PLUS®扳手 TORX PLUS® Wrench
M311...	**4.14T15P**	**T15PQ**

M311.ER

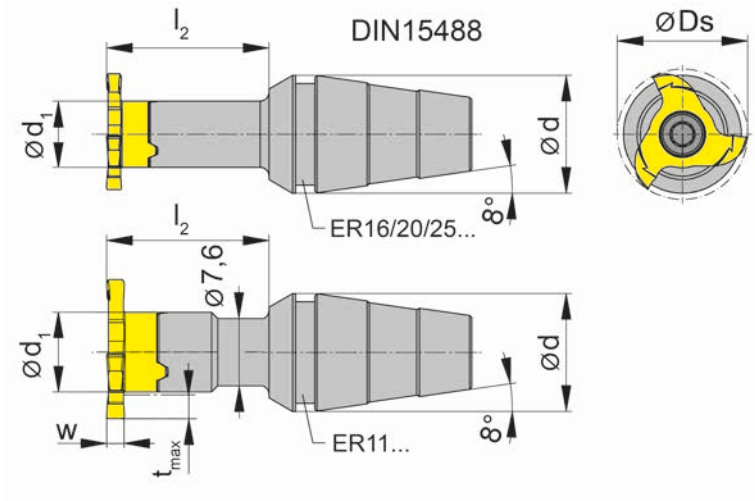

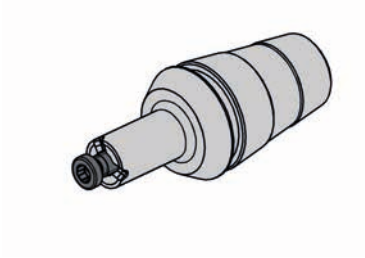

产品型号 Part number	d	l_2	d_1	锁紧螺母 Clamping nut	HWS
M311.ER11.02	11	22	9	ER11.6499	311090R
M311.ER25.02	25	22	9	ER25.6499	311090R
M311.ER16.02	16	22	9	ER16.6499/ERM16.6499	311090R
M311.ER20.02	20	22	9	ER20.6499/ERM20.6499	311090R
M311.ER20.14.01	20	19.7	12.5	ER20.6499/ERM20.6499	311090R
M311.ER25.14.01	25	19.7	14.5	ER25.6499	311090R

w,Ds,tmax见刀片
w, Ds, tmax see inserts

铣刀杆不包含夹紧螺母-需要单独订购！
Clamping nut is not combined with milling shank - separate order required!

配件
Spare Parts

铣刀杆 Milling shank	锁紧螺钉 Clamping Screw	TORX PLUS®扳手 TORX PLUS® Wrench
M311.E...	**4.14T15P**	**T15PQ**
M311.ER25.14.01	**4.14T15P**	**T15PL**

铣刀杆
Milling shank

M311

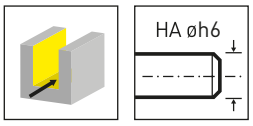

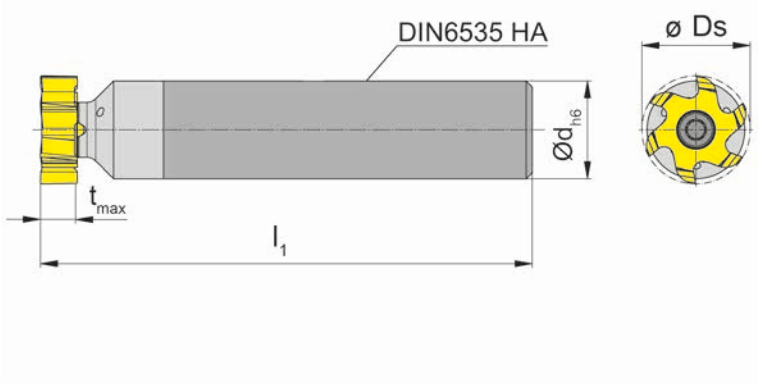

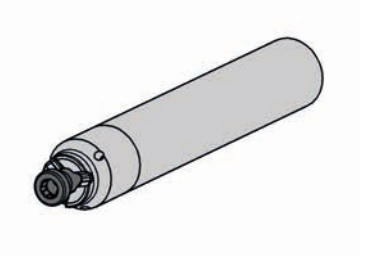

产品型号 Part number	d	l_1	形式 Form	HWS
M311.0012.D.00A	12	80	A	311090R
M311.0016.D.00A	16	80	A	311090R

tmax和Ds见刀片
tmax and Ds see inserts

配件
Spare Parts

铣刀杆 Milling shank	锁紧螺钉 Clamping Screw	TORX PLUS®扳手 TORX PLUS® Wrench
M311...	**4.14T15P**	**T15PQ**

WFB

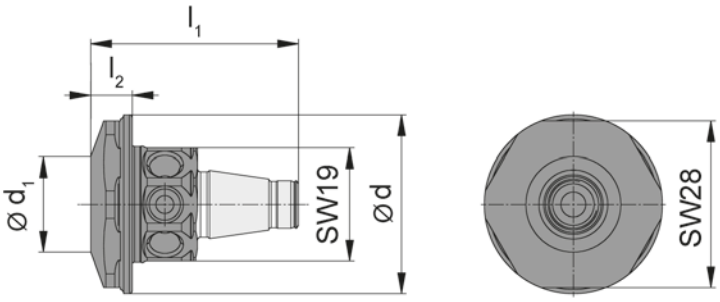

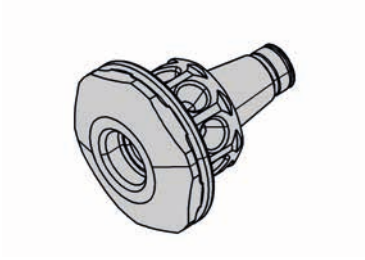

产品型号 Part number	l_1	l_2	d_1	d
WFB.2012.M081.01	35	7	16	30

配合螺纹锁紧型铣刀
for Screw-in cutter

螺纹锁紧铣刀
Screw-in cutter

M311.M

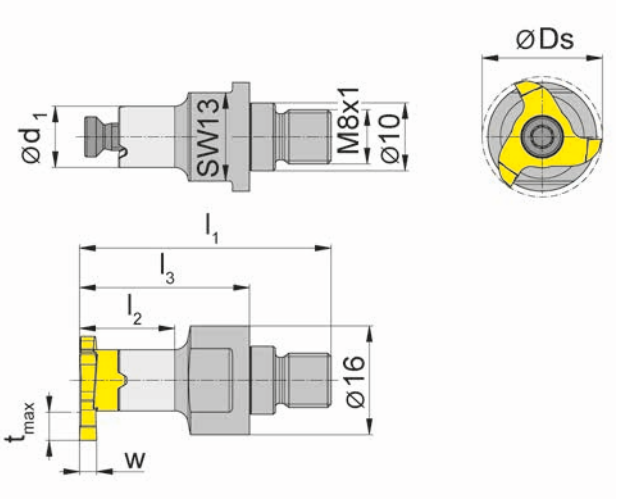

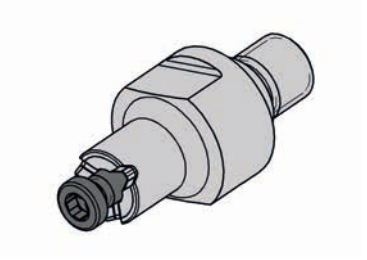

产品型号 Part number	l_1	l_2	l_3	d_1	SW	HWS	HMS
M311.M081.01	37	14	25	9	13	311090R	8201

w,Ds,tmax见刀片
w, Ds, tmax see inserts

配件
Spare Parts

螺纹锁紧铣刀 Screw-in cutter	锁紧螺钉 Clamping Screw	TORX PLUS®扳手 TORX PLUS® Wrench
M311.M081.01	**4.14T15P**	**T15PQ**

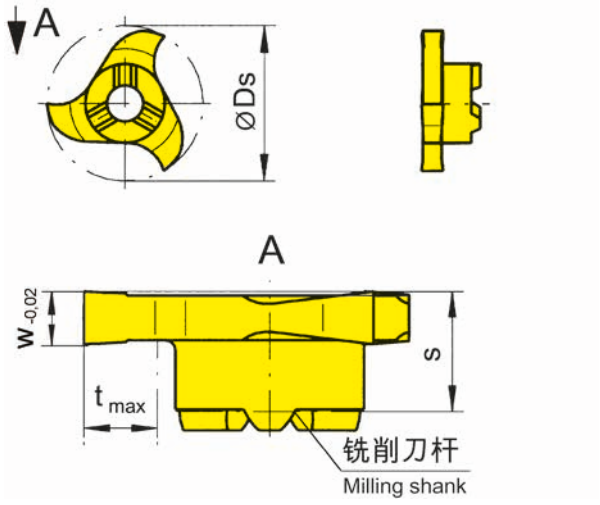

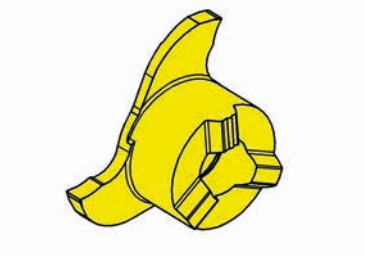

图示=右手型
Picture = right hand cutting version

硬质合金牌号
Carbide grades

▲ 库存
on stock

Δ 4周
4 weeks

产品型号 Part number	Ds	Nw	w	s	t_{max}	Z	HIS		AS45	TN35
311.0110.00	17.7	1.1	1.21	5.75	3.5	3	311090R			▲
311.0130.00	17.7	1.3	1.41	5.75	3.5	3	311090R		Δ	▲
311.0160.00	17.7	1.6	1.71	5.75	3.5	3	311090R		Δ	▲
								P	●	●
								M	●	●
								K	●	●
								N	o	●
								S	●	●
								H	-	-

z3

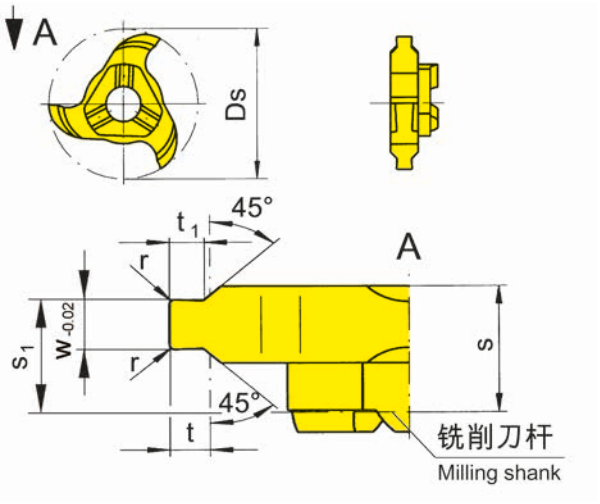

图示=右手型
Picture = right hand cutting version

硬质合金牌号
Carbide grades

▲ 库存
on stock

Δ 4周
4 weeks

产品型号 Part number	Ds	Nw	w	t_1	s	s_1	r	t_{max}	Z	HIS		AS45
311.1307.30	17.7	1.3	1.41	0.65	5.95	4.7	-	0.7	3	311090R		▲
311.1812.35	17.7	1.85	1.96	1.21	5.95	5	0.2	1.25	3	311090R		▲
											P	●
											M	●
											K	●
											N	o
											S	●
											H	-

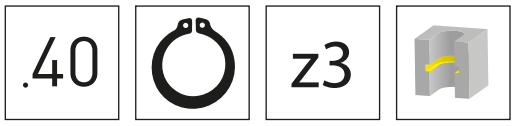

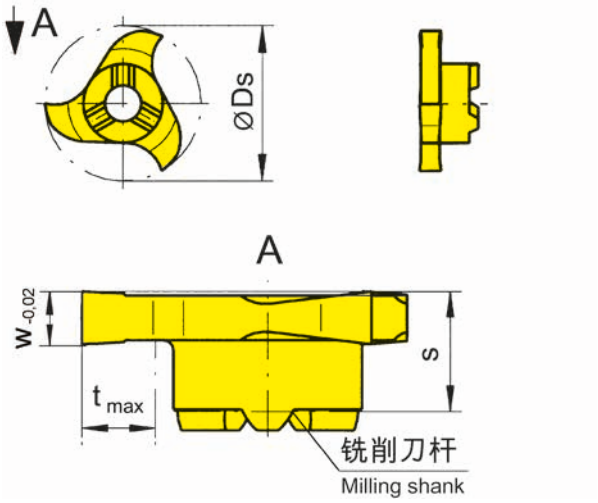

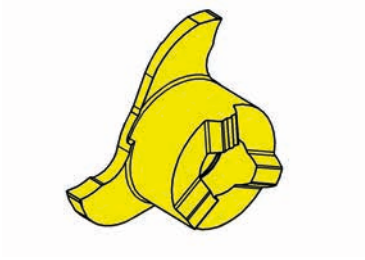

图示=右手型
Picture = right hand cutting version

硬质合金牌号
Carbide grades

▲ 库存
on stock

Δ 4周
4 weeks

产品型号 Part number	Ds	Nw	w	s	t_{max}	Z	HIS		TI25
311.0110.40	17.7	1.1	1.21	5.75	3.5	3	311090R		▲
311.0130.40	17.7	1.3	1.41	5.75	3.5	3	311090R		▲
311.0160.40	17.7	1.6	1.71	5.75	3.5	3	311090R		Δ
								P	-
								M	-
								K	-
								N	●
								S	-
								H	-

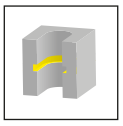

z3

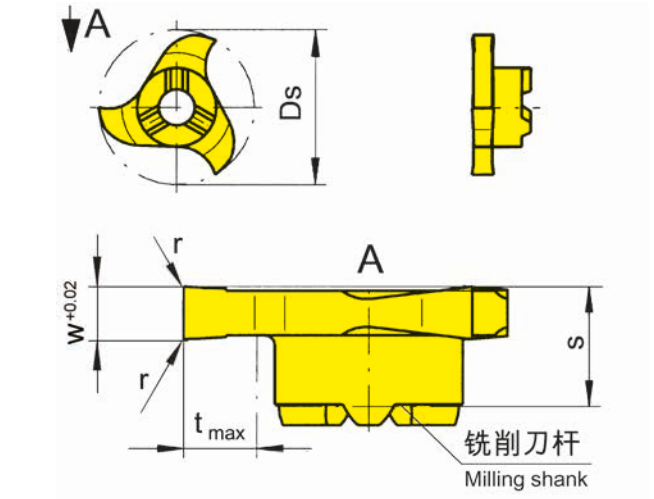

图示=右手型
Picture = right hand cutting version

硬质合金牌号
Carbide grades

▲ 库存
on stock

Δ 4周
4 weeks

产品型号 Part number	Ds	w	s	r	t_{max}	Z	HIS		MG12	AS45	TN35
311.0150.00	17.7	1.5	5.75	-	3.5	3	311090R			▲	▲
311.0200.00	17.7	2	5.75	0.2	3.5	3	311090R		Δ	▲	▲
311.0250.00	17.7	2.5	5.75	0.2	3.5	3	311090R			▲	▲
311.0300.00	17.7	3	5.75	0.2	3.5	3	311090R		▲	▲	▲
311.0400.00	17.7	4	5.75	0.2	3.5	3	311090R			▲	
								P	o	●	●
								M	-	●	●
								K	-	●	●
								N	-	o	●
								S	-	●	●
								H	-	-	-

.40 | z3

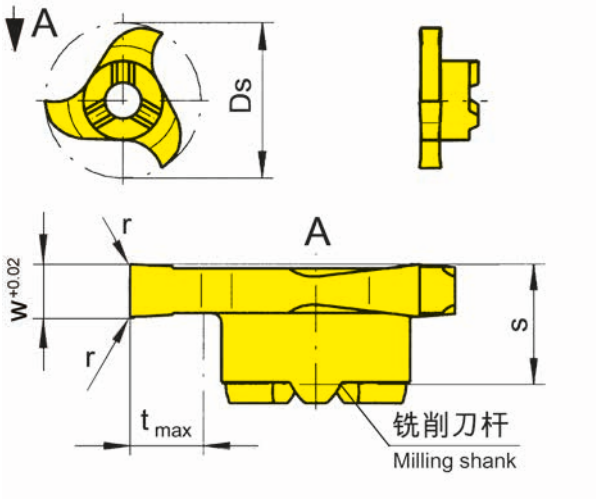

图示=右手型
Picture = right hand cutting version

硬质合金牌号
Carbide grades

▲ 库存
on stock

Δ 4周
4 weeks

产品型号 Part number	Ds	w	s	r	t_{max}	Z	HIS		TI25
311.0150.40	17.7	1.5	5.75	-	3.5	3	311090R		▲
311.0200.40	17.7	2	5.75	0.2	3.5	3	311090R		▲
311.0250.40	17.7	2.5	5.75	0.2	3.5	3	311090R		▲
311.0300.40	17.7	3	5.75	0.2	3.5	3	311090R		▲
311.0400.40	17.7	4	5.75	0.2	3.5	3	311090R		▲
								P	-
								M	-
								K	-
								N	●
								S	-
								H	-

z3
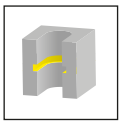

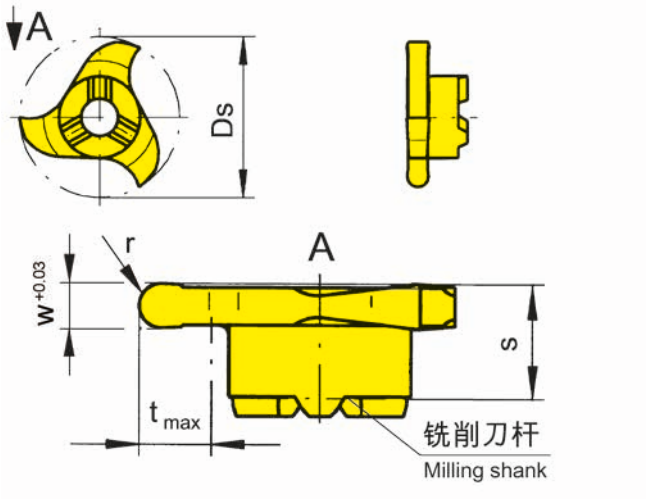

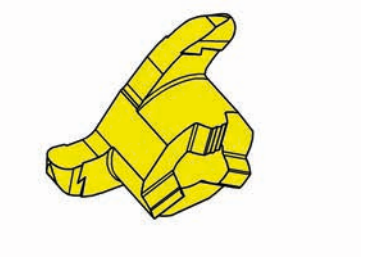

图示=右手型
Picture = right hand cutting version

硬质合金牌号
Carbide grades

▲ 库存
on stock

Δ 4周
4 weeks

产品型号 Part number	Ds	w	s	r	t_{max}	Z	HIS		AN25	AS45	RC45	TN35
311.0005.10	17.7	1	5.75	0.5	3.5	3	311090R		▲		▲	
311.0007.15	17.7	1.5	5.75	0.75	3.5	3	311090R			▲		
311.0010.20	17.7	2	5.75	1	3.5	3	311090R			▲		
311.0011.22	17.7	2.2	5.75	1.1	3.5	3	311090R			▲		▲
311.0015.30	17.7	3	5.75	1.5	3.5	3	311090R			▲		
311.0020.40	17.7	4	5.75	2	3.5	3	311090R			▲		
								P	●	●	●	●
								M	o	●	●	●
								K	-	●	●	●
								N	-	o	-	●
								S	-	●	-	●
								H	-	-	-	-

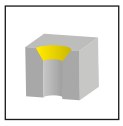

z3

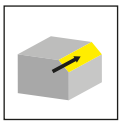

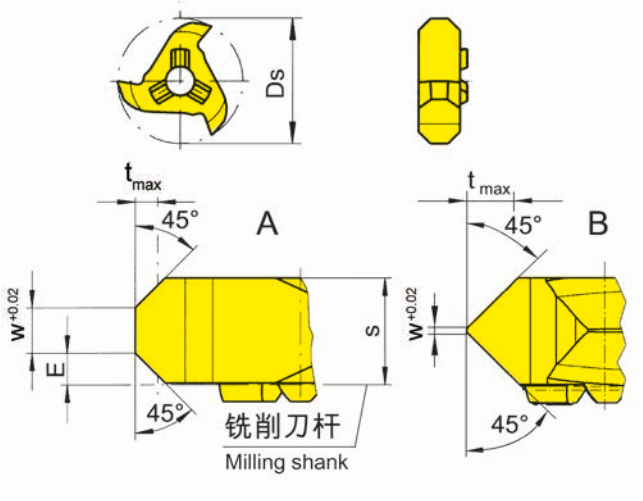

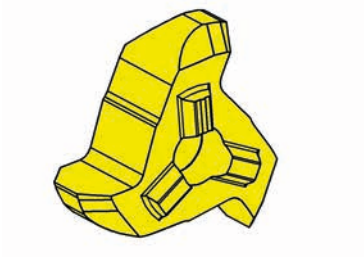

图示=右手型
Picture = right hand cutting version

硬质合金牌号
Carbide grades

▲ 库存
on stock

Δ 4周
4 weeks

产品型号 Part number	Ds	E	s	w	形式 Form	t_{max}	Z	HIS		TI25	TN35
311.4545.00	17.7	1.7	5.95	2.5	A	1.4	3	311090R			▲
311.4545.20	15	2.95	5.95	0.2	B	2.5	3	311090R		▲	▲
									P	●	●
									M	●	●
									K	●	●
									N	●	●
									S	●	●
									H	-	-

z6

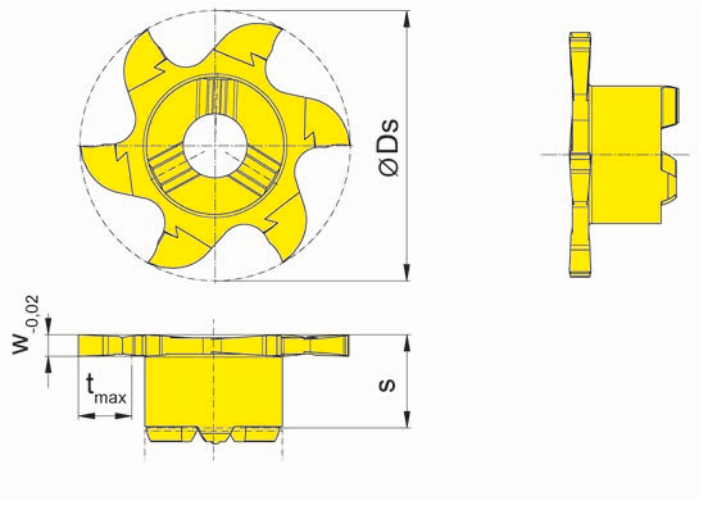

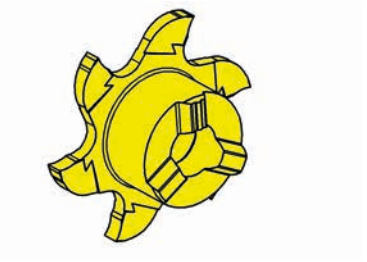

图示=右手型
Picture = right hand cutting version

硬质合金牌号
Carbide grades

▲ 库存
on stock

Δ 4周
4 weeks

产品型号 Part number	Ds	Nw	w	s	t_{max}	Z	HIS		AS45	TI25
611.0110.00	17.7	1.1	1.21	6.1	3.5	6	311090R			▲
611.0130.00	17.7	1.3	1.41	6.1	3.5	6	311090R		▲	▲
611.0160.00	17.7	1.6	1.71	6.1	3.5	6	311090R		▲	▲
								P	●	●
								M	●	●
								K	●	●
								N	o	●
								S	●	●
								H	-	-

z6

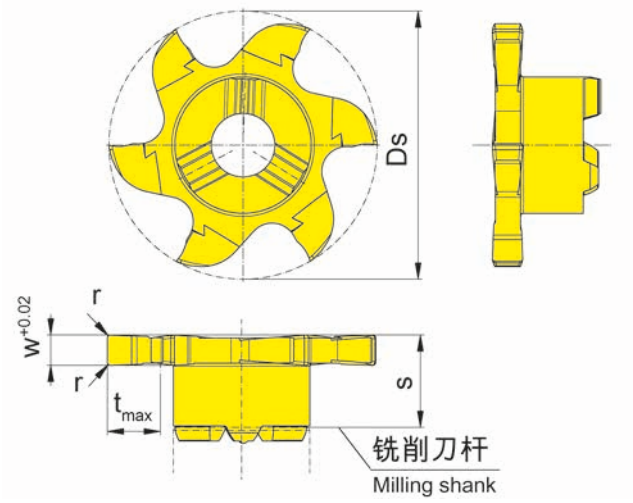

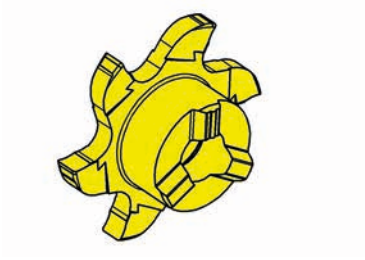

图示=右手型
Picture = right hand cutting version

硬质合金牌号
Carbide grades

▲ 库存
on stock

Δ 4周
4 weeks

产品型号 Part number	Ds	w	s	r	t_{max}	Z	HIS		AS45	TI25
611.0150.00	17.7	1.5	6.1	-	3.5	6	311090R		▲	▲
611.0200.00	17.7	2	6.1	0.2	3.5	6	311090R		▲	▲
611.0250.00	17.7	2.5	6.1	0.2	3.5	6	311090R		▲	▲
611.0300.00	17.7	3	6.1	0.2	3.5	6	311090R		▲	▲
611.0400.00	17.7	4	6.1	0.2	3.5	6	311090R		▲	
								P	●	●
								M	●	●
								K	●	●
								N	o	●
								S	●	●
								H	-	-

2.5mm槽宽以上的刀片是错齿的
from width of groove 2,5 mm toothing with cross-cut

z6

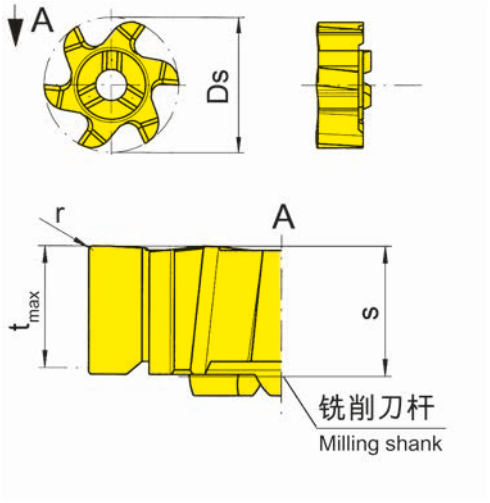

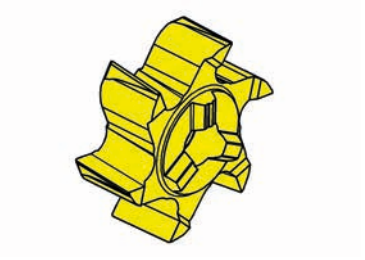

图示=右手型
Picture = right hand cutting version

硬质合金牌号
Carbide grades

▲ 库存
on stock

Δ 4周
4 weeks

产品型号 Part number	Ds	Z	r	t_{max}	s	HIS		AS45	TF45	TI25
611.PL61.62	17.7	6	0.2	5.7	6.1	311090R		▲	▲	▲
							P	●	●	●
							M	●	●	●
							K	●	●	●
							N	o	●	●
							S	●	●	●
							H	-	-	-

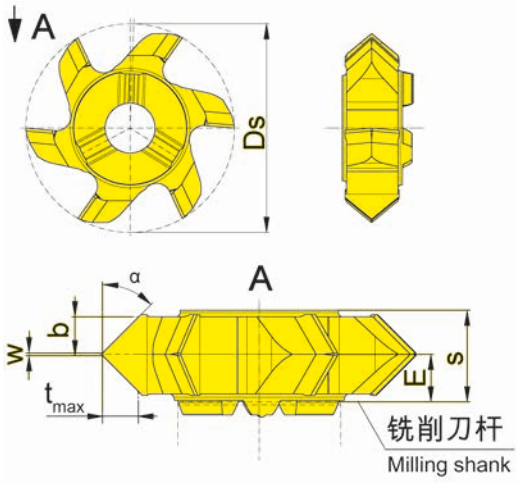

图示=右手型
Picture = right hand cutting version

硬质合金牌号
Carbide grades

▲ 库存
on stock

Δ 4周
4 weeks

产品型号 Part number	Ds	E	s	w	α	b	t_{max}	Z	HIS		AS45	TA45	TI25
611.1515.20	17.7	3.2	6.3	0.2	15°	2.8	0.75	6	311090R		▲	▲	
611.2020.20	17.7	3.2	6.3	0.2	20°	2.8	1	6	311090R		▲	▲	
611.3030.20	17.7	3.2	6.3	0.2	30°	2.8	1.6	6	311090R		▲	▲	
611.4545.20	17.7	3.2	6.3	0.2	45°	2.3	2.3	6	311090R		▲		▲
										P	●	●	●
										M	●	●	●
										K	●	●	●
										N	o	●	●
										S	●	●	●
										H	-	-	-

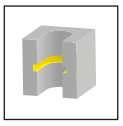

z9

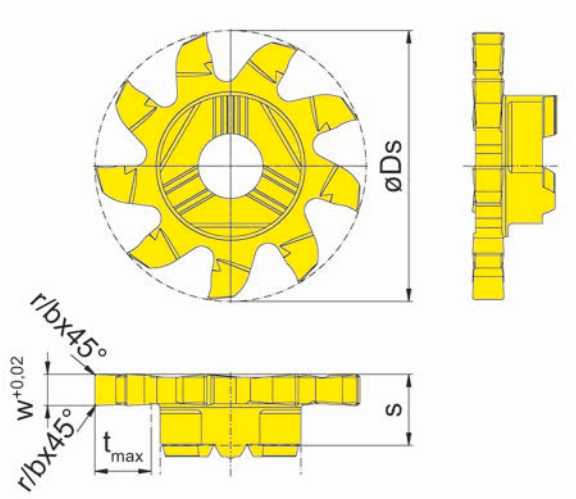

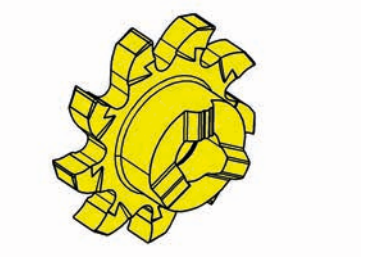

图示=右手型
Picture = right hand cutting version

硬质合金牌号
Carbide grades

▲ 库存
on stock

Δ 4周
4 weeks

产品型号 Part number	Ds	w	s	b x 45°	r	t_{max}	Z	HIS		EG55	IG65
911.0150.00	17.7	1.5	6.1	0.05	-	3.5	9	311090R		▲	Δ
911.0200.00	17.7	2	6.1	-	0.2	3.5	9	311090R		▲	Δ
911.0250.00	17.7	2.5	6.1	-	0.2	3.5	9	311090R		▲	Δ
911.0300.00	17.7	3	6.1	-	0.2	3.5	9	311090R		▲	Δ
									P	●	●
									M	o	●
									K	o	-
									N	-	-
									S	-	o
									H	-	-

槽铣削(圆弧插补铣削)
Groove Milling by circular interpolation

铣刀杆
Milling shank
M116

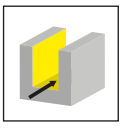

页/Page
112

刀片
Insert
116

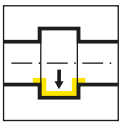

页/Page
113-114

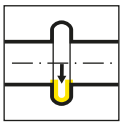

页/Page
115

M116

铣刀杆

带可转位刀片

孔径
非旋转 Ø 16 mm
旋转类 Ø 20.4 mm

Milling shank with exchangeable insert

from bore
non rotating Ø 16 mm
rotating Ø 20,4 mm

铣刀杆
Milling shank

M116

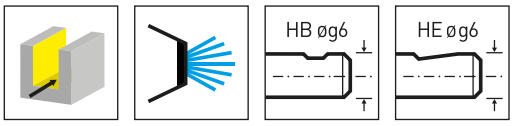

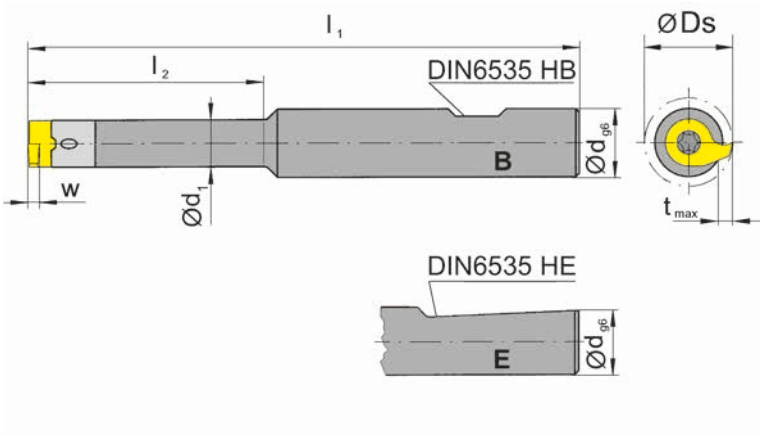

产品型号 Part number	d	l_1	l_2	d_1	形式 Form	HWS
M116.0012.01B	12	130	40	11	B	116110R • 116110L
M116.0012.02B	12	130	56	11	B	116110R • 116110L
M116.0016.01B	16	130	40	11	B	116110R • 116110L
M116.0016.02B	16	130	56	11	B	116110R • 116110L
M116.0016.03B	16	150	80	11	B	116110R • 116110L
M116.0016.01E	16	130	40	11	E	116110R • 116110L
M116.0016.03E	16	150	80	11	E	116110R • 116110L

w,Ds,tmax见刀片
w, Ds, tmax see inserts

注意Ø16mm条件:
只有当主轴停止并偏心通过孔进行背铣时。

Note from Ø 16 mm:
Only back face milling with oriented spindlestop offset of centerline.

配件
Spare Parts

铣刀杆 Milling shank	锁紧螺钉 Clamping Screw	TORX PLUS®扳手 TORX PLUS® Wrench
M116...	**5.13T20EP**	**T20PQ**

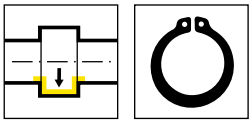

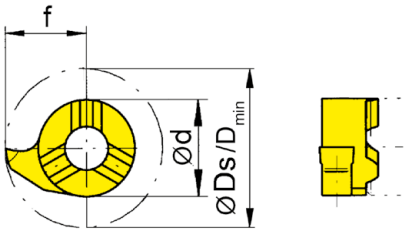

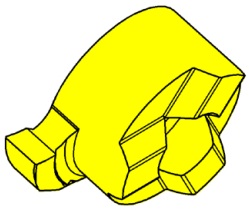

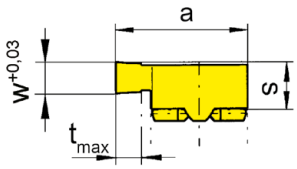

R=右手型-如图
R = right hand version shown

L=左手型
L = left hand version

▲ 库存
on stock

硬质合金牌号
Carbide grades

Δ 4周
4 weeks

产品型号 Part number	w	Nw	f	Ds	a	d	t_{max}	D_{min}	Z	HIS	MG12	EG55	TH35	TN35
R116.0110.00	1.19	1.1	10.2	20.4	15.7	11	4.3	16	1	116110R	▲	▲	▲	▲
R116.0130.00	1.39	1.3	10.2	20.4	15.7	11	4.3	16	1	116110R	▲	▲	▲	▲
R116.0160.00	1.69	1.6	10.2	20.4	15.7	11	4.3	16	1	116110R	▲	▲	▲	▲
L116.0110.00	1.19	1.1	10.2	20.4	15.7	11	4.3	16	1	116110L	▲		▲	▲
L116.0130.00	1.39	1.3	10.2	20.4	15.7	11	4.3	16	1	116110L	▲	▲	▲	▲
L116.0160.00	1.69	1.6	10.2	20.4	15.7	11	4.3	16	1	116110L	▲	▲	▲	▲
											P o	●	●	●
											M -	o	●	●
											K -	o	●	●
											N -	-	●	●
											S -	-	●	●
											H -	-	-	-

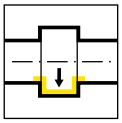

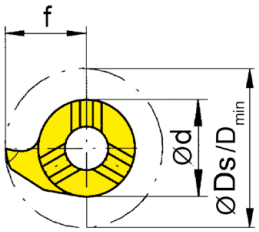

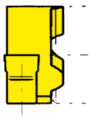

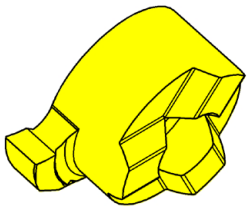

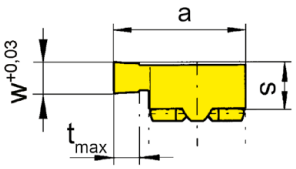

R=右手型-如图
R = right hand version shown

L=左手型
L = left hand version

▲ 库存
on stock

硬质合金牌号
Carbide grades

Δ 4周
4 weeks

产品型号 Part number	w	f	Ds	a	d	t_{max}	D_{min}	Z	HIS		MG12	EG55	TH35	TN35
R116.0200.00	2	10.2	20.4	15.7	11	4.3	16	1	116110R		▲	▲	▲	▲
R116.0250.00	2.5	10.2	20.4	15.7	11	4.3	16	1	116110R		▲	▲	▲	▲
R116.0300.00	3	10.2	20.4	15.7	11	4.3	16	1	116110R		▲	▲	▲	▲
R116.0350.00	3.5	10.2	20.4	15.7	11	4.3	16	1	116110R		▲	▲	▲	▲
R116.0400.00	4	10.2	20.4	15.7	11	4.3	16	1	116110R		▲	▲	▲	▲
L116.0200.00	2	10.2	20.4	15.7	11	4.3	16	1	116110L		▲	▲	▲	▲
L116.0250.00	2.5	10.2	20.4	15.7	11	4.3	16	1	116110L		▲		▲	▲
L116.0300.00	3	10.2	20.4	15.7	11	4.3	16	1	116110L		▲	▲	▲	▲
L116.0350.00	3.5	10.2	20.4	15.7	11	4.3	16	1	116110L		▲		▲	▲
L116.0400.00	4	10.2	20.4	15.7	11	4.3	16	1	116110L		▲		▲	▲

P	o	●	●	●
M	-	o	●	●
K	-	o	●	●
N	-	-	●	●
S	-	-	●	●
H	-	-	-	-

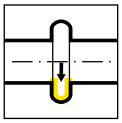

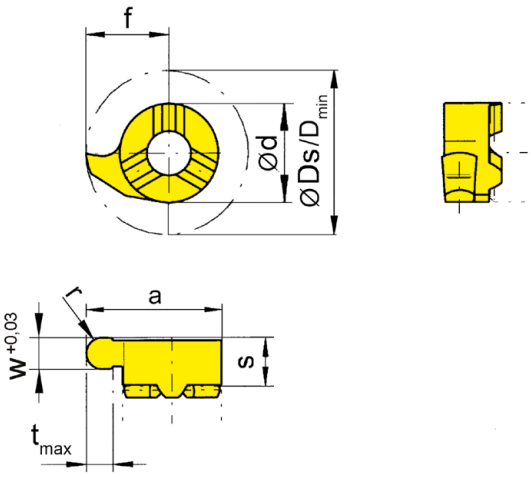

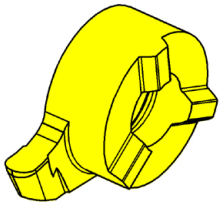

R=右手型-如图
R = right hand version shown

L=左手型
L = left hand version

硬质合金牌号
Carbide grades

▲ 库存
on stock

Δ 4周
4 weeks

产品型号 Part number	w	f	Ds	a	r	d	t_{max}	D_{min}	Z	HIS	MG12	EG55	TH35	TN35
R116.0009.18	1.8	10.2	20.4	15.7	0.9	11	4.3	16	1	116110R	▲	▲	▲	▲
R116.0011.22	2.2	10.2	20.4	15.7	1.1	11	4.3	16	1	116110R	▲	▲	▲	▲
R116.0015.30	3	10.2	20.4	15.7	1.5	11	4.3	16	1	116110R	▲	▲	▲	▲
R116.0020.40	4	10.2	20.4	15.7	2	11	4.3	16	1	116110R	Δ	▲	▲	▲
L116.0009.18	1.8	10.2	20.4	15.7	0.9	11	4.3	16	1	116110L	Δ	▲	▲	▲
L116.0011.22	2.2	10.2	20.4	15.7	1.1	11	4.3	16	1	116110L	Δ	▲	▲	▲
L116.0015.30	3	10.2	20.4	15.7	1.5	11	4.3	16	1	116110L	Δ	▲	▲	▲
L116.0020.40	4	10.2	20.4	15.7	2	11	4.3	16	1	116110L	Δ		▲	▲

P	o	●	●	●
M	-	o	●	●
K	-	o	●	●
N	-	-	●	●
S	-	-	●	●
H	-	-	-	-

铣刀杆
Milling shank
M313/M313.ST/
M313.ER

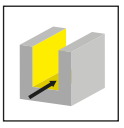

页/Page
118-123

常规刀柄
Basic Holder
WFB

页/Page
124

螺纹锁紧铣刀
Screw-in cutter
M313.M

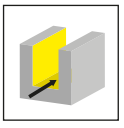

页/Page
125

刀片
Insert
313/L313/613/
713/913

页/Page
126-127, 129-
130, 138-139

页/Page
128, 132

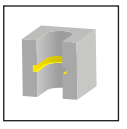

页/Page
131, 133-134,
137, 140, 147,
149

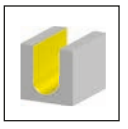

页/Page
135

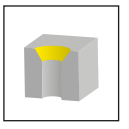

页/Page
136, 145-146

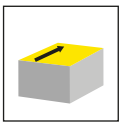

页/Page
141-143, 148

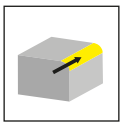

页/Page
144

M313

铣刀杆

带可转位刀片

孔径自Ø 22 mm

Milling shank with exchangeable insert

from bore Ø 22 mm

铣刀杆
Milling shank

M313

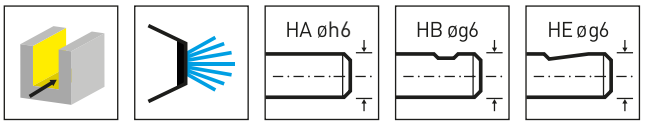

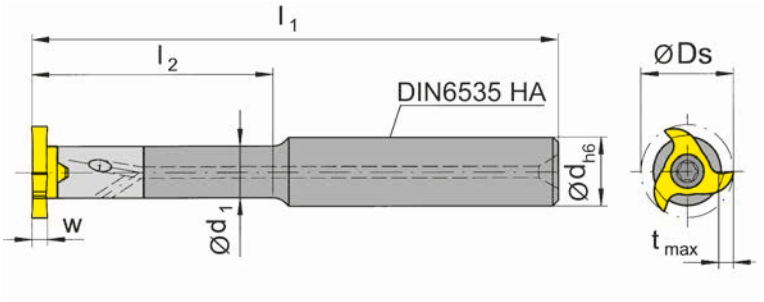

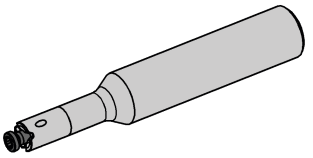

产品型号 Part number	d	l_1	l_2	d_1	形式 Form	HWS
M313.0012.01A	12	100	-	-	A	313113R • 313113L
M313.0012.02A	12	130	-	-	A	313113R • 313113L
M313.0016.01A	16	100	42	12	A	313113R • 313113L
M313.0016.02A	16	130	60	12	A	313113R • 313113L
M313.0016.03A	16	160	85	12	A	313113R • 313113L
M313.0012.01B	12	100	-	-	B	313113R • 313113L
M313.0012.02B	12	130	-	-	B	313113R • 313113L
M313.0016.01B	16	100	42	12	B	313113R • 313113L
M313.0016.02B	16	130	60	12	B	313113R • 313113L
M313.0016.03B	16	160	85	12	B	313113R • 313113L
M313.0012.01E	12	100	-	-	E	313113R • 313113L
M313.0012.02E	12	130	-	-	E	313113R • 313113L
M313.0016.01E	16	100	42	12	E	313113R • 313113L
M313.0016.02E	16	130	60	12	E	313113R • 313113L
M313.0016.03E	16	160	85	12	E	313113R • 313113L

w,Ds,tmax见刀片
w, Ds, tmax see inserts

配件
Spare Parts

铣刀杆 Milling shank	锁紧螺钉 Clamping Screw	TORX PLUS®扳手 TORX PLUS® Wrench
M313...	**5.14T20P**	**T20PQ**

铣刀杆
Milling shank

M313.ST

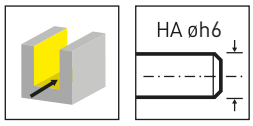

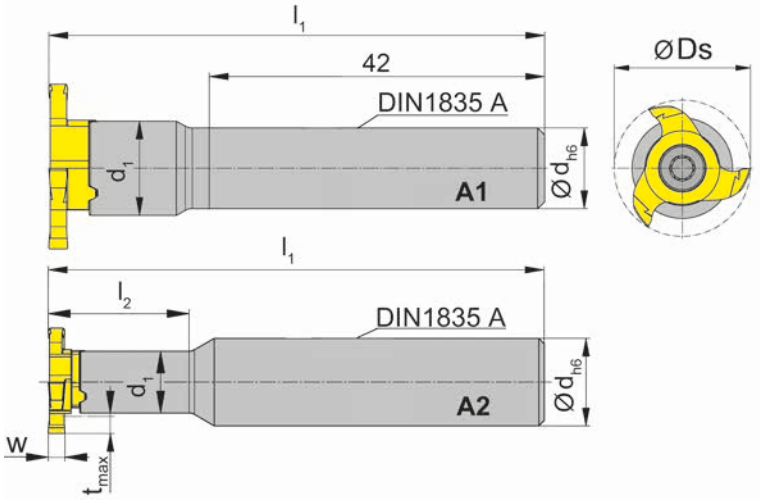

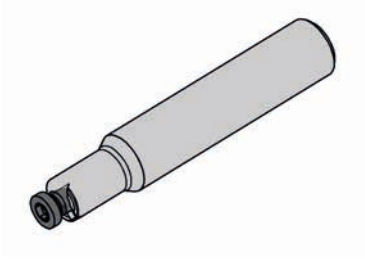

产品型号 Part number	d	l_1	l_2	d_1	形式 Form	HWS
M313.ST10.01A	10	60	-	11.3	A1	313113R • 313113L
M313.ST12.01A	12	70	18	11.3	A2	313113R • 313113L
M313.ST13.01A	13	70	26	11.3	A2	313113R • 313113L
M313.ST16.01A	16	80	26	11.3	A2	313113R • 313113L

w,Ds,tmax见刀片
w, Ds, tmax see inserts

配件
Spare Parts

铣刀杆 Milling shank	锁紧螺钉 Clamping Screw	TORX PLUS®扳手 TORX PLUS® Wrench
M313...	**5.14T20P**	**T20PQ**

铣刀杆
Milling shank

M313.ST

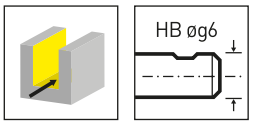

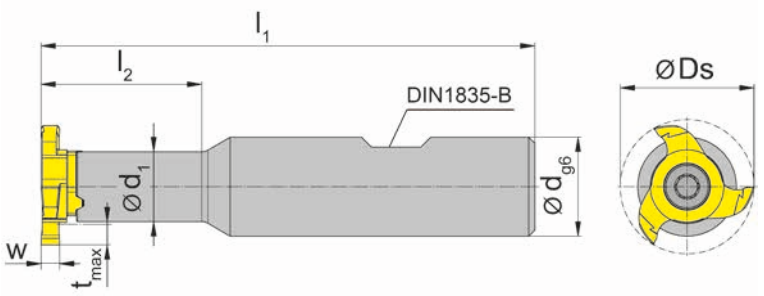

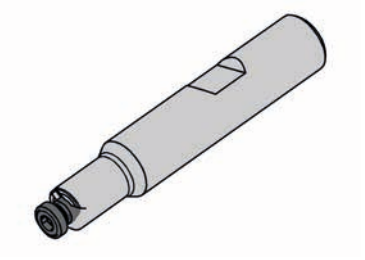

产品型号 Part number	d	l_1	l_2	d_1	形式 Form	HWS
M313.ST12.01B	12	70	18	11.3	B	313113R • 313113L
M313.ST16.01B	16	80	26	11.3	B	313113R • 313113L

w,Ds,tmax见刀片
w, Ds, tmax see inserts

配件
Spare Parts

铣刀杆 Milling shank	锁紧螺钉 Clamping Screw	TORX PLUS®扳手 TORX PLUS® Wrench
M313...	**5.14T20P**	**T20PQ**

M313.ER

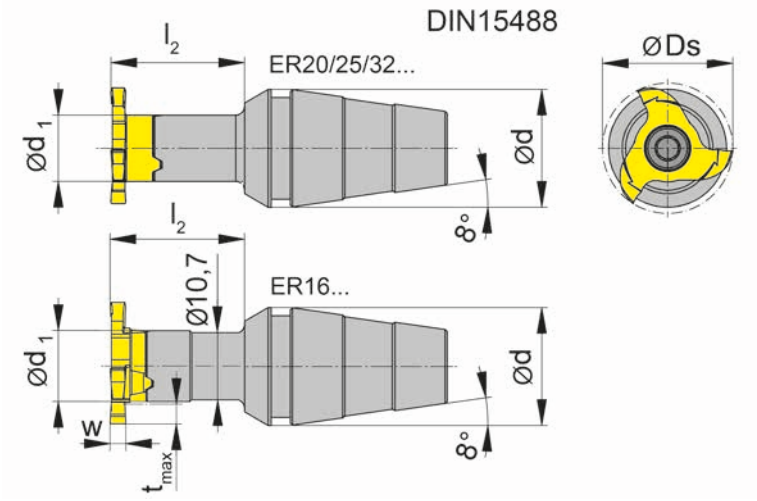

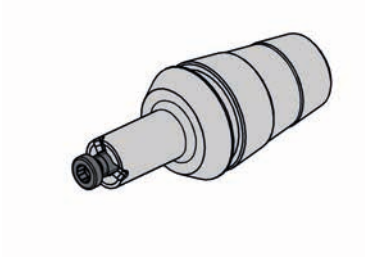

产品型号 Part number	d	l_2	d_1	锁紧螺母 Clamping nut	HWS
M313.ER16.01	16	20	11.3	ER16.6499/ERM16.6499	313113R • 313113L
M313.ER16.02	16	30	11.3	ER16.6499/ERM16.6499	313113R • 313113L
M313.ER20.01	20	20	11.3	ER20.6499/ERM20.6499	313113R • 313113L
M313.ER20.02	20	30	11.3	ER20.6499/ERM20.6499	313113R • 313113L
M313.ER25.02	25	30	11.3	ER25.6499	313113R • 313113L
M313.ER32.02	32	30	11.3	ER32.6499	313113R • 313113L

w,Ds,tmax见刀片
w, Ds, tmax see inserts

铣刀杆不包含夹紧螺母-需要单独订购！
Clamping nut is not combined with milling shank - separate order required!

配件
Spare Parts

铣刀杆 Milling shank	锁紧螺钉 Clamping Screw	TORX PLUS®扳手 TORX PLUS® Wrench
M313...	**5.14T20P**	**T20PQ**

铣刀杆
Milling shank

M313.ER

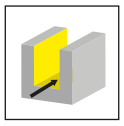

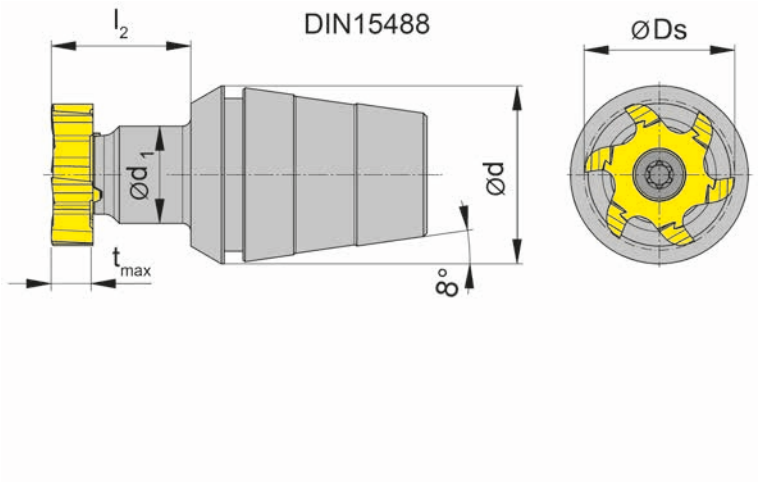

产品型号 Part number	d	l_2	d_1	锁紧螺母 Clamping nut	HWS
M313.ER25.14.01	25	19.7	14	ER25.6499	313113R • 313113L
M313.ER32.14.01	32	19.7	14	ER32.6499	313113R • 313113L

tmax和Ds见刀片
tmax and Ds see inserts

铣刀杆不包含夹紧螺母-需要单独订购！
Clamping nut is not combined with milling shank - separate order required!

配件
Spare Parts

铣刀杆 Milling shank	锁紧螺钉 Clamping Screw	TORX PLUS®扳手 TORX PLUS® Wrench
M313...	**5.14T20P**	**T20PQ**

铣刀杆
Milling shank

M313

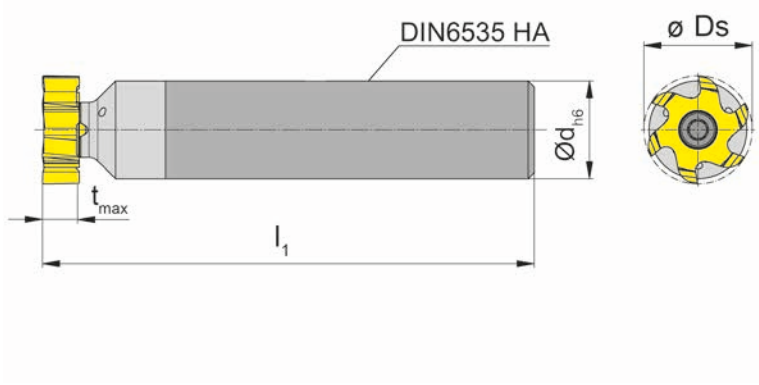

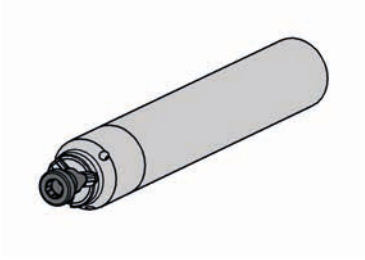

产品型号 Part number	d	l_1	形式 Form	HWS
M313.0016.D.00A	16	80	A	313113R • 313113L
M313.0020.D.00A	20	80	A	313113R • 313113L

tmax和Ds见刀片
tmax and Ds see inserts

配件
Spare Parts

铣刀杆 Milling shank	锁紧螺钉 Clamping Screw	TORX PLUS®扳手 TORX PLUS® Wrench
M313...	**5.14T20P**	**T20PQ**

WFB

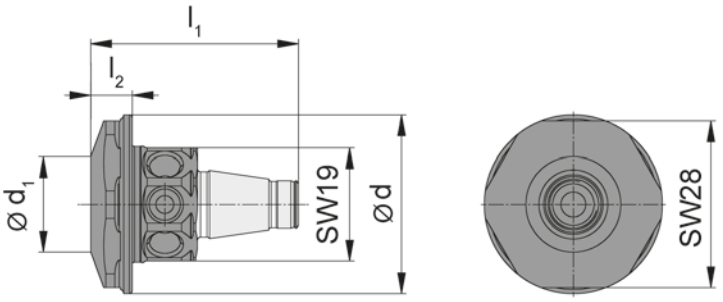

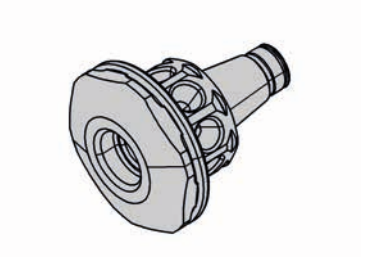

产品型号 Part number	l_1	l_2	d_1	d
WFB.2012.M081.01	35	7	16	30

配合螺纹锁紧型铣刀
for Screw-in cutter

螺纹锁紧铣刀
Screw-in cutter

M313.M

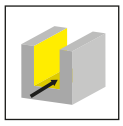

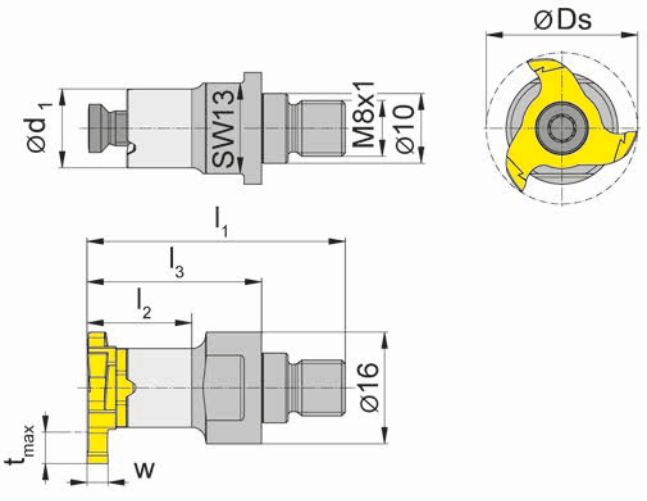

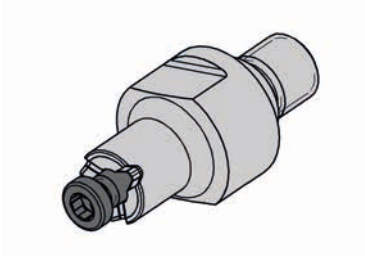

产品型号 Part number	l_1	l_2	l_3	d_1	SW	HWS	HMS
M313.M081.01	37	15	25	11.3	13	313113R • 313113L	8201

w,Ds,tmax见刀片
w, Ds, tmax see inserts

配件
Spare Parts

螺纹锁紧铣刀 Screw-in cutter	锁紧螺钉 Clamping Screw	TORX PLUS®扳手 TORX PLUS® Wrench
M313.M081.01	**5.14T20P**	**T20PQ**

z3

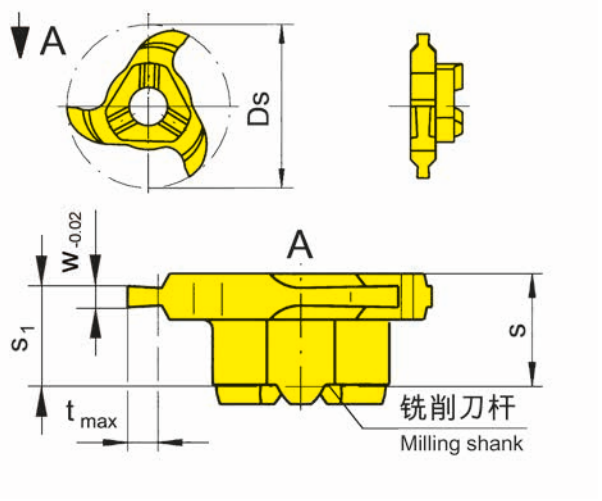

图示=右手型
Picture = right hand cutting version

硬质合金牌号
Carbide grades

▲ 库存
on stock

Δ 4周
4 weeks

产品型号 Part number	Ds	Nw	w	s	s_1	t_{max}	Z	HIS		MG12	EG55	TN35
313.0070.00	21.7	0.7	0.77	5.9	5.6	1.5	3	313113R			▲	▲
313.0080.00	21.7	0.8	0.87	5.9	5.6	1.7	3	313113R			▲	▲
313.0090.00	21.7	0.9	0.97	5.9	5.6	1.9	3	313113R		Δ	▲	▲
313.0100.00	21.7	1	1.07	5.9	5.6	2.2	3	313113R			▲	▲
313.0110.00	21.7	1.1	1.21	5.9	5.6	2.5	3	313113R			▲	▲
									P	o	●	●
									M	-	o	●
									K	-	o	●
									N	-	-	●
									S	-	-	●
									H	-	-	-

z3

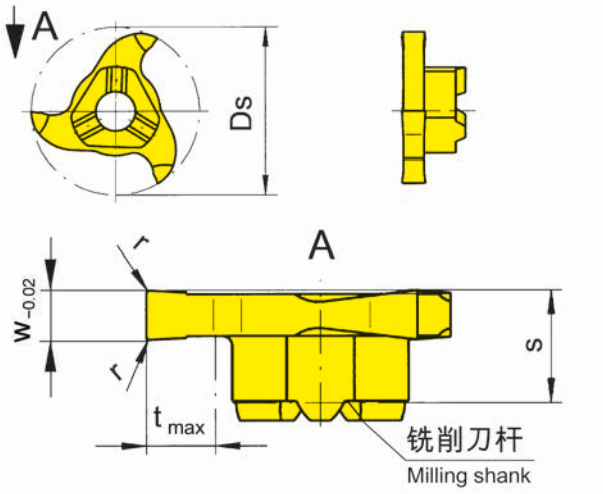

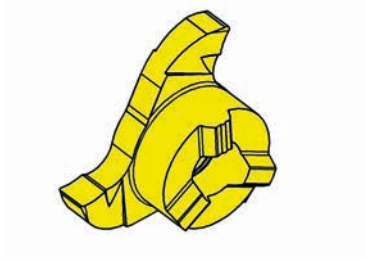

图示=右手型
Picture = right hand cutting version

硬质合金牌号
Carbide grades

▲ 库存
on stock

Δ 4周
4 weeks

产品型号 Part number	Ds	Nw	w	s	r	t_{max}	Z	HIS	MG12	AS45	EG55	TI25	TN35
313.0130.00	21.7	1.3	1.41	5.7	-	4.5	3	313113R	▲	▲	▲	▲	▲
313.0160.00	21.7	1.6	1.71	5.7	-	4.5	3	313113R	▲	▲	▲	▲	▲
313.0185.00	21.7	1.85	1.96	5.7	0.2	4.5	3	313113R	▲	▲	▲	▲	▲
313.0215.00	21.7	2.15	2.26	5.7	0.2	4.5	3	313113R	▲	▲	▲	▲	▲
313.0265.00	21.7	2.65	2.76	5.7	0.2	4.5	3	313113R	▲	▲	▲	▲	▲
313.0315.00	21.7	3.15	3.26	5.7	0.2	4.5	3	313113R	▲	▲	▲	▲	▲
313.0415.00	21.7	4.15	4.26	5.7	0.2	4.5	3	313113R	▲	▲	▲	▲	▲
313.0515.00	21.7	5.15	5.26	5.7	0.2	4.5	3	313113R	▲	▲	▲	▲	▲
P									o	●	●	●	●
M									-	●	o	●	●
K									-	●	o	●	●
N									-	o	-	●	●
S									-	●	-	●	●
H									-	-	-	-	-

可以提供浅切深的槽宽0.5mm以下的刀片。
Inserts for widths of groove tmax down to 0,5 mm can be delivered with reduced depth upon request.

刀片13.0415.00和313.0515.00
仅用于l2=max.42mm的刀杆
Inserts 313.0415.00 and 313.0515.00
only with toolholder dimension l2 = max. 42 mm

.40 | z3

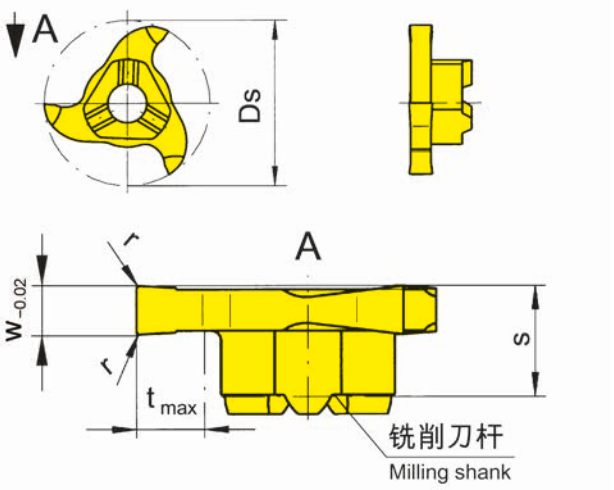

图示=右手型
Picture = right hand cutting version

硬质合金牌号
Carbide grades

▲ 库存
on stock

Δ 4周
4 weeks

产品型号 Part number	Ds	Nw	w	s	r	t_{max}	Z	HIS		MG12	TI25
313.0130.40	21.7	1.3	1.41	5.7	-	4.5	3	313113R			▲
313.0160.40	21.7	1.6	1.71	5.7	-	4.5	3	313113R			▲
313.0185.40	21.7	1.85	1.96	5.7	0.2	4.5	3	313113R			▲
313.0215.40	21.7	2.15	2.26	5.7	0.2	4.5	3	313113R			▲
313.0265.40	21.7	2.65	2.76	5.7	0.2	4.5	3	313113R			▲
313.0315.40	21.7	3.15	3.26	5.7	0.2	4.5	3	313113R			▲
313.0415.40	21.7	4.15	4.26	5.7	0.2	4.5	3	313113R		Δ	▲
313.0515.40	21.7	5.15	5.26	5.7	0.2	4.5	3	313113R		Δ	▲
									P	-	-
									M	-	-
									K	-	-
									N	o	●
									S	-	-
									H	-	-

刀片313.0415.40和313.0515.40
仅用于l2=max.42mm的刀杆
Inserts 313.0415.40 and 313.0515.40
only with toolholder dimension l2 = max. 42 mm

L313

z3

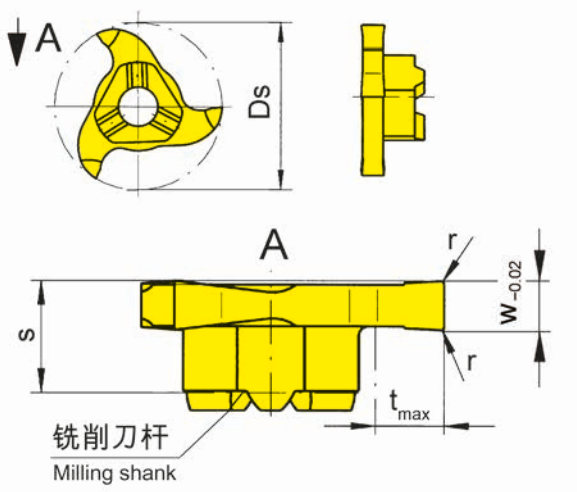

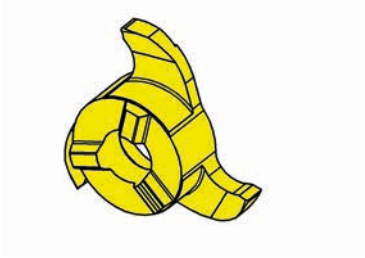

图示=左手型切削
Picture = left hand cutting version

硬质合金牌号
Carbide grades

▲ 库存
on stock

Δ 4周
4 weeks

产品型号 Part number	Ds	Nw	w	s	r	t_{max}	Z	HIS		AS45	EG55	TI25
L313.0130.00	21.7	1.3	1.41	5.7	-	4.5	3	313113L		Δ	Δ	
L313.0160.00	21.7	1.6	1.71	5.7	-	4.5	3	313113L		Δ	Δ	
L313.0185.00	21.7	1.85	1.96	5.7	0.2	4.5	3	313113L		Δ	Δ	
L313.0215.00	21.7	2.15	2.26	5.7	0.2	4.5	3	313113L		Δ	Δ	Δ
L313.0265.00	21.7	2.65	2.76	5.7	0.2	4.5	3	313113L		Δ	Δ	
L313.0315.00	21.7	3.15	3.26	5.7	0.2	4.5	3	313113L		Δ	Δ	
L313.0415.00	21.7	4.15	4.26	5.7	0.2	4.5	3	313113L		Δ	Δ	
L313.0515.00	21.7	5.15	5.26	5.7	0.2	4.5	3	313113L		Δ	Δ	
									P	●	●	●
									M	●	o	●
									K	●	o	●
									N	o	-	●
									S	●	-	●
									H	-	-	-

可以提供浅切深的槽宽0.5mm以下的刀片。
Inserts for widths of groove tmax down to 0,5 mm can be delivered with reduced depth upon request.

刀片313.0415.00和L313.0515.00
仅用于l2=max.42mm的刀杆
Inserts L313.0415.00 and L313.0515.00
only with toolholder dimension l2 = max. 42 mm

z3

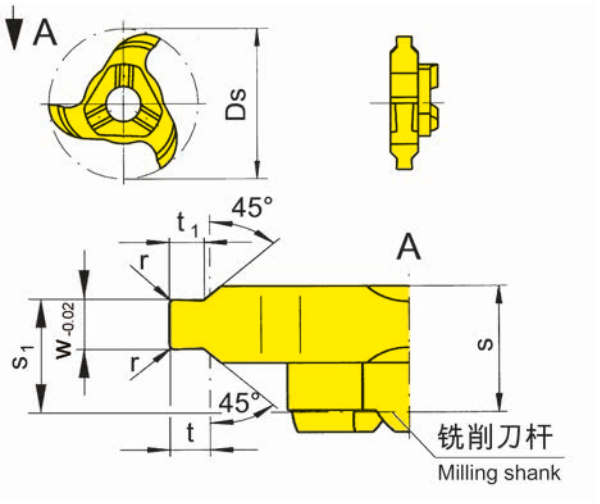

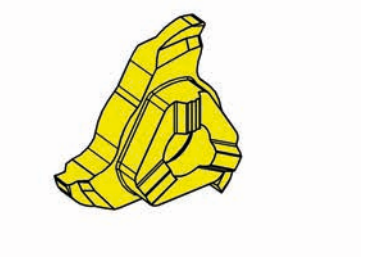

图示=右手型
Picture = right hand cutting version

硬质合金牌号
Carbide grades

▲ 库存
on stock

Δ 4周
4 weeks

产品型号 Part number	Ds	Nw	w	t_1	s	s_1	r	t_{max}	Z	HIS	AS45	EG55	TA45	TN35
313.1105.30	21.7	1.1	1.21	0.47	5.9	5.07	-	0.5	3	313113R		▲		▲
313.1307.30	21.7	1.3	1.41	0.65	5.9	5.17	-	0.7	3	313113R	Δ	▲		▲
313.1308.30	21.7	1.3	1.41	0.81	5.9	5.17	-	0.85	3	313113R		▲		▲
313.1609.35	21.7	1.6	1.71	0.81	5.9	5.07	-	0.85	3	313113R		▲		▲
313.1610.35	21.7	1.6	1.71	0.95	5.9	5.07	-	1	3	313113R	▲	▲		▲
313.1812.35	21.7	1.85	1.96	1.21	5.9	5.19	0.2	1.25	3	313113R	▲	▲		▲
313.2115.35	21.7	2.15	2.26	1.45	5.9	5.34	0.2	1.5	3	313113R	Δ	▲	Δ	▲
313.2616.45	21.7	2.65	2.76	1.45	5.9	5.09	0.2	1.5	3	313113R	▲	▲		▲
313.2617.45	21.7	2.65	2.76	1.7	5.9	5.09	0.2	1.75	3	313113R		▲		▲
313.3118.45	21.7	3.15	3.26	1.7	5.9	5.34	0.2	1.75	3	313113R	Δ	▲		▲
313.4120.55	21.7	4.15	4.26	1.95	5.9	5.34	0.2	2	3	313113R		▲		▲
313.4125.55	21.7	4.15	4.26	2.45	5.9	5.34	0.2	2.5	3	313113R		▲		▲

	AS45	EG55	TA45	TN35
P	●	●	●	●
M	●	o	●	●
K	●	o	●	●
N	o	-	●	●
S	●	-	●	●
H	-	-	-	-

刀片313.4120.55和313.4125.55
仅用于l2=max.42mm的刀杆
Inserts 313.4120.55 and 313.4125.55
only with toolholder dimension l2 = max. 42 mm

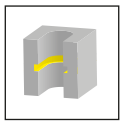

z3

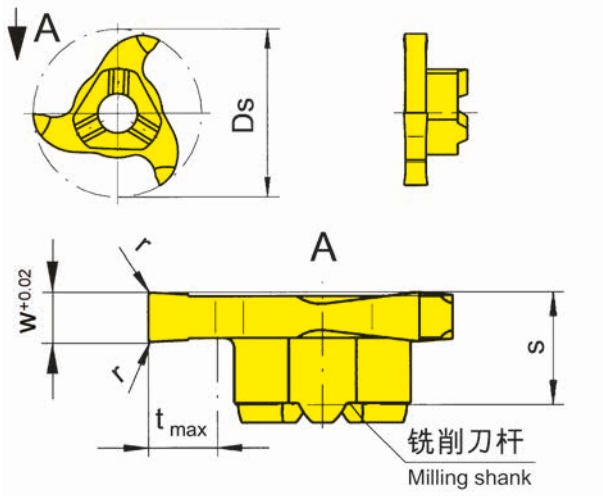

图示=右手型
Picture = right hand cutting version

硬质合金牌号
Carbide grades

▲ 库存
on stock

Δ 4周
4 weeks

产品型号 Part number	Ds	w	s	r	t_{max}	Z	HIS		MG12	AS45	EG55	TI25	TN35
313.0150.00	21.7	1.5	5.7	-	4.5	3	313113R		▲	▲	▲		▲
313.0150.01	21.7	1.5	5.7	0.1	4.5	3	313113R			▲	▲		
313.0200.00	21.7	2	5.7	0.2	4.5	3	313113R		▲	▲	▲		▲
313.0250.00	21.7	2.5	5.7	0.2	4.5	3	313113R		Δ	▲	▲	▲	▲
313.0300.00	21.7	3	5.7	0.2	4.5	3	313113R		▲	▲	▲		▲
313.0350.00	21.7	3.5	5.7	0.2	4.5	3	313113R		Δ	▲	▲	▲	
313.0400.00	21.7	4	5.7	0.2	4.5	3	313113R		▲	▲	▲		▲
313.0500.00	21.7	5	5.7	0.2	4.5	3	313113R			▲	▲		▲
313.0600.00	21.7	6	6.9	0.2	4.5	3	313113R		Δ	▲	▲		▲
								P	o	●	●	●	●
								M	-	●	o	●	●
								K	-	●	o	●	●
								N	-	o	-	●	●
								S	-	●	-	●	●
								H	-	-	-	-	-

可以提供浅切深的槽宽0.5mm以下的刀片。
Inserts for widths of groove tmax down to 0,5 mm can be delivered with reduced depth upon request.

刀片**313.0600.00**带断屑
Insert 313.0600.00 with chip divider!

.40 | z3

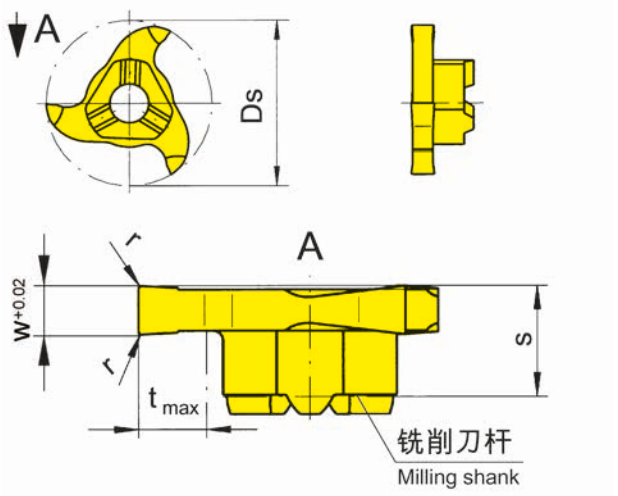

图示=右手型
Picture = right hand cutting version

硬质合金牌号
Carbide grades

▲ 库存
on stock

Δ 4周
4 weeks

产品型号 Part number	Ds	w	s	r	t_{max}	Z	HIS		TI25
313.0150.40	21.7	1.5	5.7	-	4.5	3	313113R		▲
313.0200.40	21.7	2	5.7	0.2	4.5	3	313113R		▲
313.0250.40	21.7	2.5	5.7	0.2	4.5	3	313113R		▲
313.0300.40	21.7	3	5.7	0.2	4.5	3	313113R		▲
313.0400.40	21.7	4	5.7	0.2	4.5	3	313113R		▲
								P	-
								M	-
								K	-
								N	●
								S	-
								H	-

L313

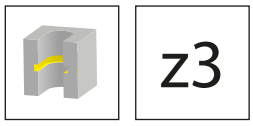

z3

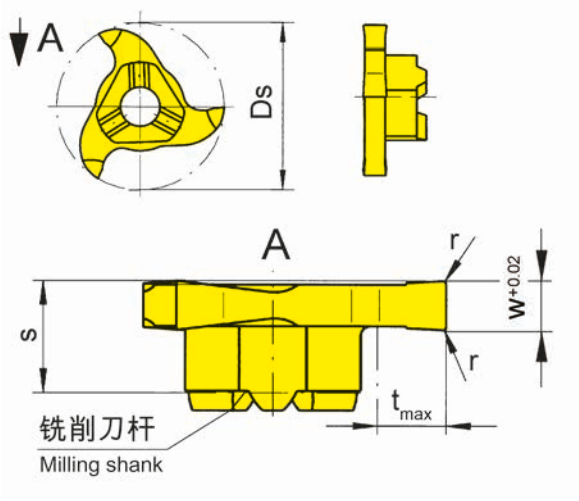

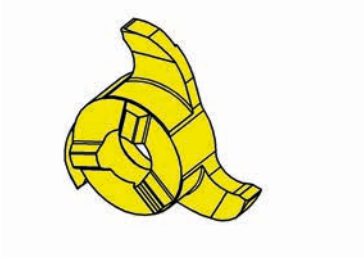

图示=左手型切削
Picture = left hand cutting version

硬质合金牌号
Carbide grades

▲ 库存
on stock

Δ 4周
4 weeks

产品型号 Part number	Ds	w	s	r	t_{max}	Z	HIS		MG12	AS45	EG55	TI25
L313.0150.00	21.7	1.5	5.7	-	4.5	3	313113L			Δ	Δ	
L313.0150.01	21.7	1.5	5.7	0.1	4.5	3	313113L			Δ	Δ	
L313.0200.00	21.7	2	5.7	0.2	4.5	3	313113L			Δ	Δ	
L313.0250.00	21.7	2.5	5.7	0.2	4.5	3	313113L			Δ	Δ	Δ
L313.0300.00	21.7	3	5.7	0.2	4.5	3	313113L			Δ	Δ	
L313.0350.00	21.7	3.5	5.7	0.2	4.5	3	313113L			Δ	Δ	Δ
L313.0400.00	21.7	4	5.7	0.2	4.5	3	313113L			▲	Δ	
L313.0500.00	21.7	5	5.7	0.2	4.5	3	313113L			Δ	Δ	
L313.0600.00	21.7	6	6.9	0.2	4.5	3	313113L		Δ	Δ	Δ	
								P	o	●	●	●
								M	-	●	o	●
								K	-	●	o	●
								N	-	o	-	●
								S	-	●	-	●
								H	-	-	-	-

可以提供浅切深的槽宽0.5mm以下的刀片。
Inserts for widths of groove tmax down to 0,5 mm can be delivered with reduced depth upon request.

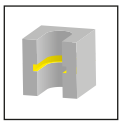

z3

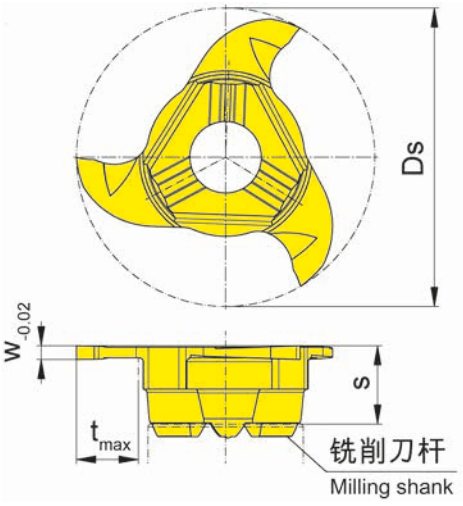

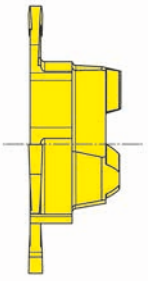

图示=右手型
Picture = right hand cutting version

硬质合金牌号
Carbide grades

▲ 库存
on stock

Δ 4周
4 weeks

产品型号 Part number	Ds	w	s	t_{max}	Z	HIS		EG55	TI25	TN35
313.0100.1.00	21.7	1	5.7	4.5	3	313113R		▲	▲	▲
							P	●	●	●
							M	o	●	●
							K	o	●	●
							N	-	●	●
							S	-	●	●
							H	-	-	-

z3

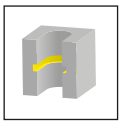

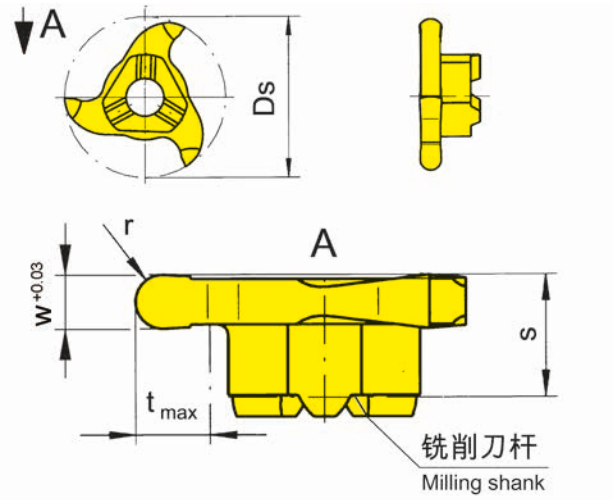

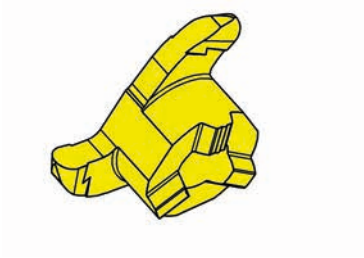

图示=右手型
Picture = right hand cutting version

硬质合金牌号
Carbide grades

▲ 库存
on stock

Δ 4周
4 weeks

产品型号 Part number	Ds	w	s	r	t_{max}	Z	HIS		AS45	EG55	TN35
313.0005.10	21.7	1	5.7	0.5	4.5	3	313113R			▲	▲
313.0007.15	21.7	1.5	5.7	0.75	4.5	3	313113R		▲	▲	
313.0010.20	21.7	2	5.7	1	4.5	3	313113R		▲	▲	▲
313.0014.28	21.7	2.8	5.7	1.4	4.5	3	313113R		▲	▲	▲
313.0015.30	21.7	3	5.7	1.5	4.5	3	313113R		▲	▲	▲
313.0020.40	21.7	4	5.7	2	4.5	3	313113R		▲	▲	▲
313.0025.50	21.7	5	5.7	2.5	4.5	3	313113R		▲	▲	▲
								P	●	●	●
								M	●	o	●
								K	●	o	●
								N	o	-	●
								S	●	-	●
								H	-	-	-

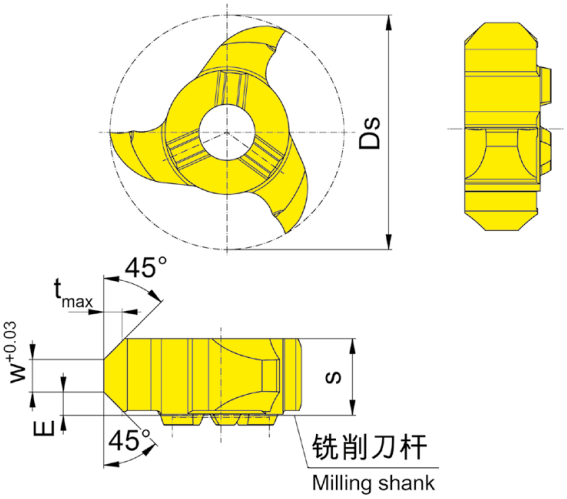

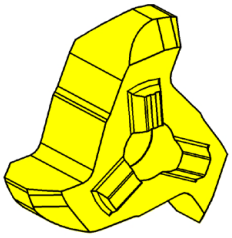

图示=右手型
Picture = right hand cutting version

▲ 库存
on stock

Δ 4周
4 weeks

硬质合金牌号
Carbide grades

产品型号 Part number	Ds	E	s	w	t_{max}	Z	HIS		EG55	TA45	TN35
313.4545.00	21.7	2.15	7.1	3	1.7	3	313113R		▲		▲
313.4545.30.00	21.7	3.6	9.4	2.6	3	3	313113R		▲	▲	
								P	●	●	●
								M	o	●	●
								K	o	●	●
								N	-	●	●
								S	-	●	●
								H	-	-	-

s = 7.1 mm 刀片使用螺钉 5.17T20P
s = 9.4 mm 刀片使用螺钉 5.13T20P
For Insert s = 7,1 mm use screw 5.17T20P
For Insert s = 9,4 mm use screw 5.13T20P

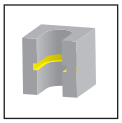

z6

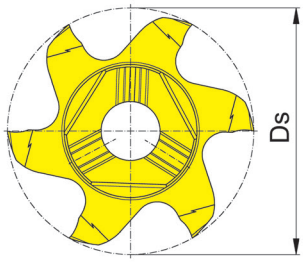

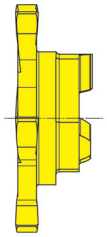

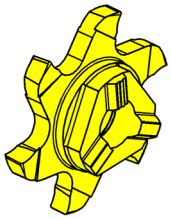

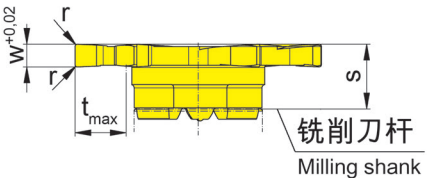

图示=右手型
Picture = right hand cutting version

硬质合金牌号
Carbide grades

▲ 库存
on stock

Δ 4周
4 weeks

产品型号 Part number	Ds	w	s	r	t_{max}	Z	HIS	AS45	EG55	TI25
613.0150.00	21.7	1.5	5.7	-	4.5	6	313113R	▲	▲	▲
613.0200.00	21.7	2	5.7	0.2	4.5	6	313113R	▲	▲	▲
613.0250.00	21.7	2.5	5.7	0.2	4.5	6	313113R	▲	▲	▲
613.0300.00	21.7	3	5.7	0.2	4.5	6	313113R	▲	▲	▲
613.0400.00	21.7	4	5.7	0.2	4.5	6	313113R	▲	▲	▲
613.0600.00	21.7	6	7.35	0.2	4.5	6	313113R		▲	
613.0800.00	21.7	8	9.15	0.2	4.5	6	313113R		▲	

	AS45	EG55	TI25
P	●	●	●
M	●	o	●
K	●	o	●
N	o	-	●
S	●	-	●
H	-	-	-

2.5mm槽宽以上的刀片是错齿的
from width of groove 2,5 mm toothing with cross-cut

刀片613.0400.00
仅用于l2=max.42mm的刀杆
Insert 613.0400.00
only with toolholder dimension l2 = max. 42 mm

B

z6

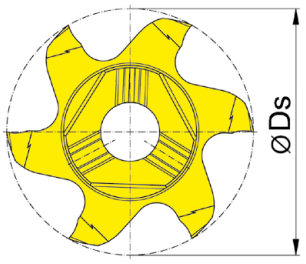

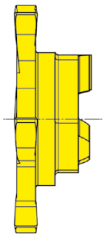

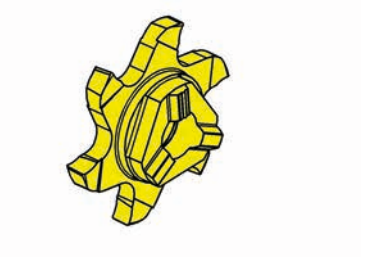

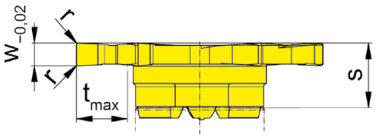

图示=右手型
Picture = right hand cutting version

硬质合金牌号
Carbide grades

▲ 库存
on stock

Δ 4周
4 weeks

产品型号 Part number	Ds	Nw	w	s	t_{max}	Z	HIS		AS45	EG55
613.0130.00	21.7	1.3	1.41	5.7	4.5	6	313113R		▲	▲
613.0215.00	21.7	2.15	2.26	5.7	4.5	6	313113R		▲	▲
613.0315.00	21.7	3.15	3.26	5.7	4.5	6	313113R		▲	▲
613.0415.00	21.7	4.15	4.26	5.7	4.5	6	313113R		▲	▲
613.0515.00	21.7	5.15	5.26	5.7	4.5	6	313113R		▲	▲
								P	●	●
								M	●	o
								K	●	o
								N	o	-
								S	●	-
								H	-	-

可以提供浅切深的槽宽0.5mm以下的刀片。
Inserts for widths of groove tmax down to 0,5 mm can be delivered with reduced depth upon request.

z6

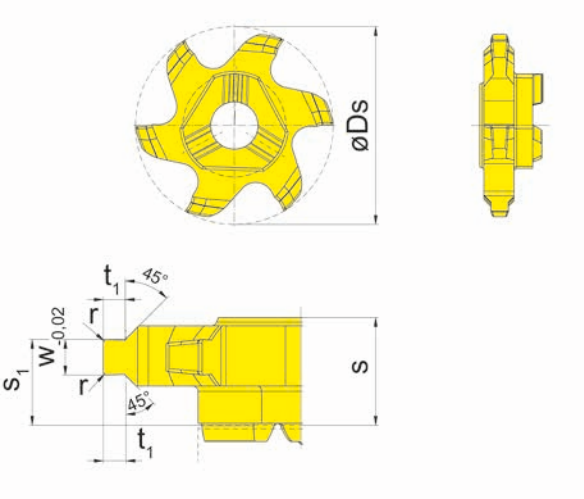

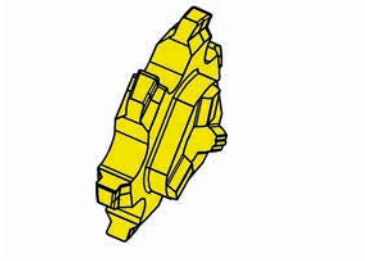

图示=右手型
Picture = right hand cutting version

硬质合金牌号
Carbide grades

▲ 库存
on stock

Δ 4周
4 weeks

产品型号 Part number	Ds	Nw	w	t_1	s	s_1	r	t_{max}	Z	HIS		AS45	EG55
613.1812.35	21.7	1.85	1.96	1.21	5.9	4.7	0.2	1.25	6	313113R			▲
613.2115.35	21.7	2.15	2.26	1.45	5.9	4.9	0.2	1.5	6	313113R		Δ	▲
											P	●	●
											M	●	o
											K	●	o
											N	o	-
											S	●	-
											H	-	-

z6

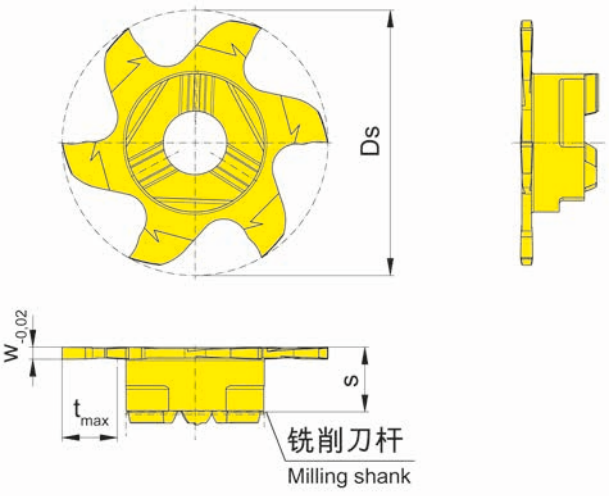

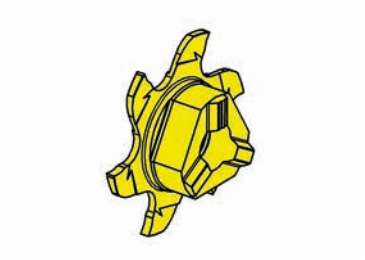

图示=右手型
Picture = right hand cutting version

硬质合金牌号
Carbide grades

▲ 库存
on stock

Δ 4周
4 weeks

产品型号 Part number	Ds	w	s	t_{max}	Z	HIS		EG55	TI25
613.0100.1.00	21.7	1	5.7	4.5	6	313113R		▲	▲
							P	●	●
							M	o	●
							K	o	●
							N	-	●
							S	-	●
							H	-	-

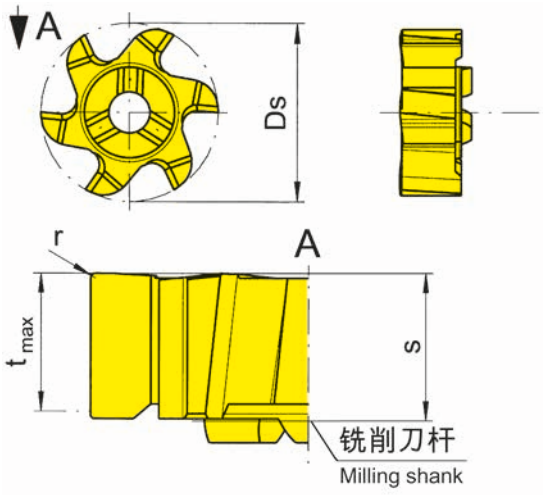

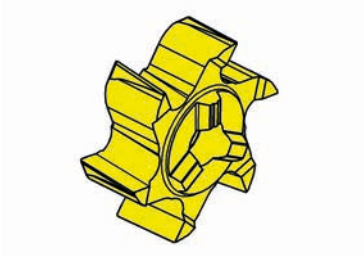

图示=右手型
Picture = right hand cutting version

硬质合金牌号
Carbide grades

▲ 库存
on stock

Δ 4周
4 weeks

产品型号 Part number	Ds	Z	r	t_{max}	s	HIS
613.PL61.62	21.7	6	0.2	5.7	6.1	313113R

	AS45	EG55	TF45	TI25
	▲	▲	▲	▲
P	●	●	●	●
M	●	o	●	●
K	●	o	●	●
N	o	-	●	●
S	●	-	●	●
H	-	-	-	-

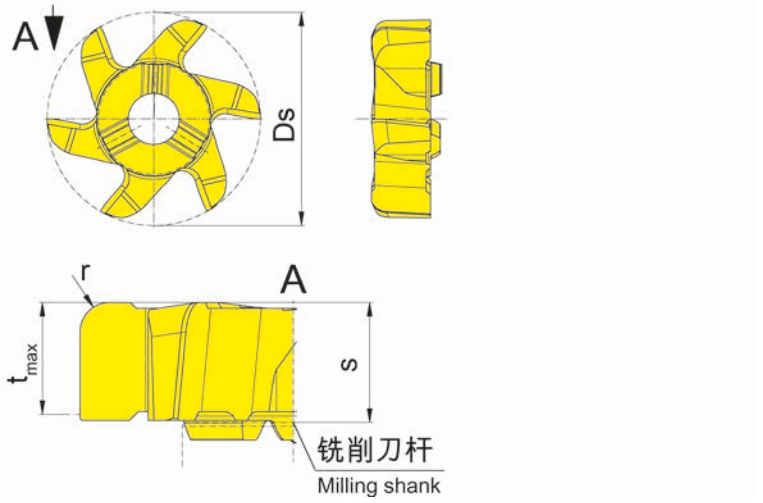

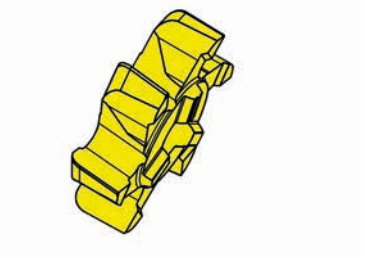

图示=右手型
Picture = right hand cutting version

▲ 库存
on stock

Δ 4周
4 weeks

硬质合金牌号
Carbide grades

产品型号 Part number	Ds	Z	r	t_{max}	s	HIS		AS45	EG55	TI25
613.PLT6.15	21.7	6	1.5	5.7	6.1	313113R		▲	▲	▲
							P	●	●	●
							M	●	o	●
							K	●	o	●
							N	o	-	●
							S	●	-	●
							H	-	-	-

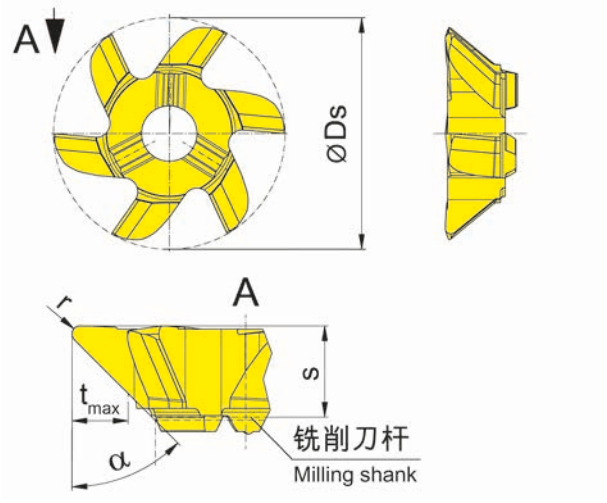

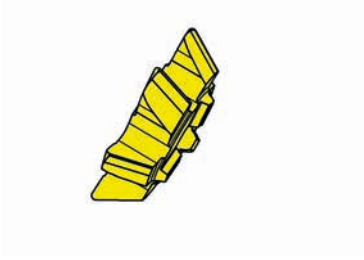

图示=右手型
Picture = right hand cutting version

硬质合金牌号
Carbide grades

▲ 库存
on stock

Δ 4周
4 weeks

产品型号 Part number	Ds	Z	r	α	t_{max}	s	HIS		AS45	EG55
613.0015.25	21.7	6	0.5	15°	1.1	5.7	313113R		▲	▲
613.0030.25	21.7	6	0.5	30°	2.3	5.7	313113R		▲	▲
613.0045.25	21.7	6	0.5	45°	3.5	5.7	313113R		▲	▲
								P	●	●
								M	●	o
								K	●	o
								N	o	-
								S	●	-
								H	-	-

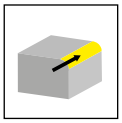

z6

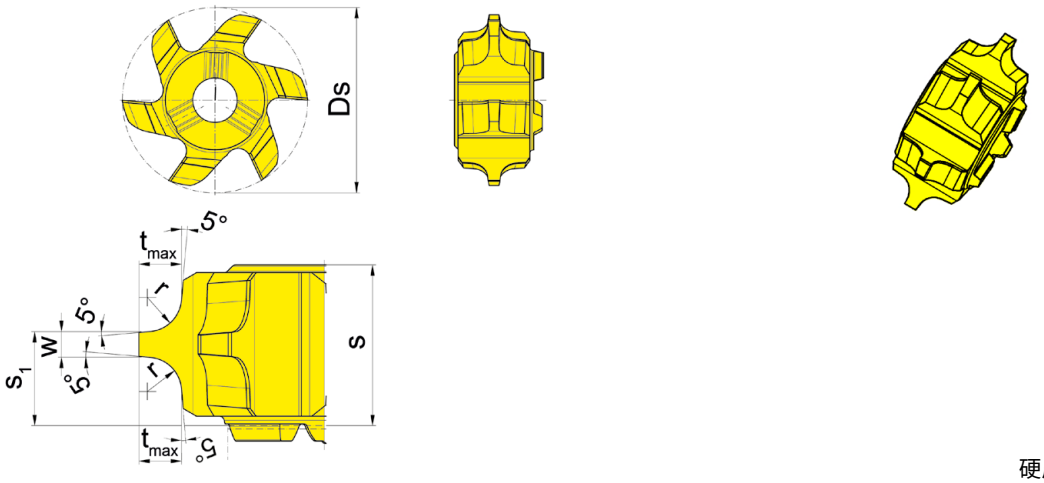

图示=右手型
Picture = right hand cutting version

硬质合金牌号
Carbide grades

▲ 库存
on stock

Δ 4周
4 weeks

产品型号 Part number	Ds	w	s	s_1	r	Z	HIS		AS45
613.R100.00	21.7	1.5	6.3	4	1	6	313113R		▲
613.R150.00	21.7	1.5	7.6	4.6	1.5	6	313113R		▲
613.R200.00	21.7	1.5	9.4	5.5	2	6	313113R		▲
613.R250.00	21.7	1.5	9.9	5.75	2.5	6	313113R		▲
613.R300.00	21.7	1.5	9.9	5.75	3	6	313113R		▲
								P	●
								M	●
								K	●
								N	o
								S	●
								H	-

s = 6.3 mm 刀片使用螺钉 5.14T20P
s = 7.6 mm 刀片使用螺钉 5.17T20P
s = 9.4-9.9 mm 刀片使用螺钉 5.13T20P
For Insert s = 6,3 mm use screw 5.14T20P
For Insert s = 7,6 mm use screw 5.17T20P
For Insert s = 9,4-9,9 mm use screw 5.13T20P

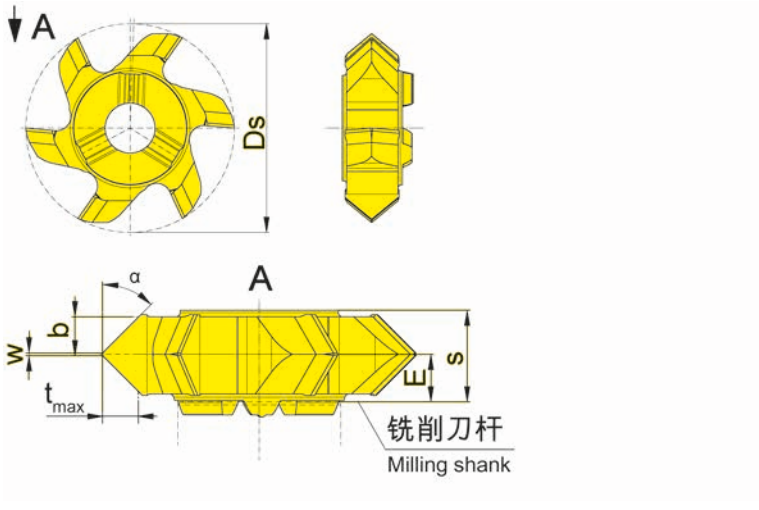

图示=右手型
Picture = right hand cutting version

硬质合金牌号
Carbide grades

▲ 库存
on stock

Δ 4周
4 weeks

产品型号 Part number	Ds	E	s	w	α	b	t_{max}	Z	HIS		EG55	TA45	TI25
613.1515.20	21.7	3.3	6.3	0.2	15°	2.7	0.75	6	313113R		▲	▲	
613.2020.20	21.7	3.3	6.3	0.2	20°	2.7	1	6	313113R		▲	▲	
613.3030.20	21.7	3.3	6.3	0.2	30°	2.7	1.6	6	313113R		▲	▲	
613.4545.20	21.7	3.3	6.3	0.2	45°	2.5	2.5	6	313113R		▲		▲
										P	●	●	●
										M	o	●	●
										K	o	●	●
										N	-	●	●
										S	-	●	●
										H	-	-	-

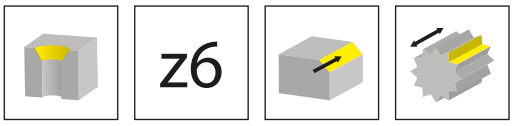

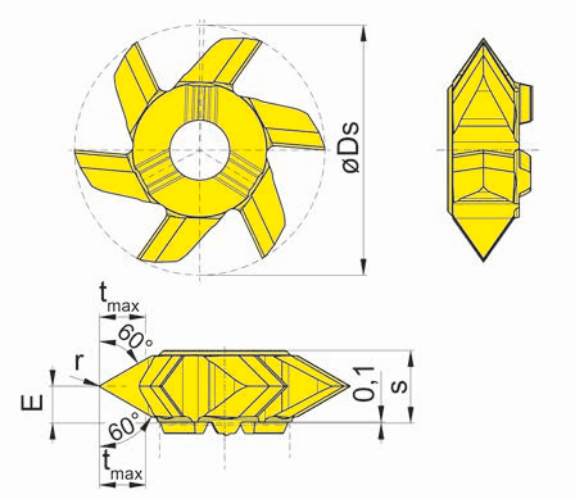

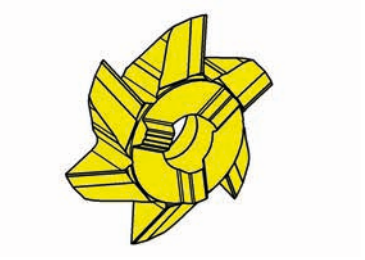

图示=右手型
Picture = right hand cutting version

硬质合金牌号
Carbide grades

▲ 库存
on stock

Δ 4周
4 weeks

产品型号 Part number	Ds	E	s	r	t_{max}	Z	HIS		AS45
613.6060.05	21.7	3.2	6.3	0.05	4	6	313113R		▲
								P	●
								M	●
								K	●
								N	o
								S	●
								H	-

z12

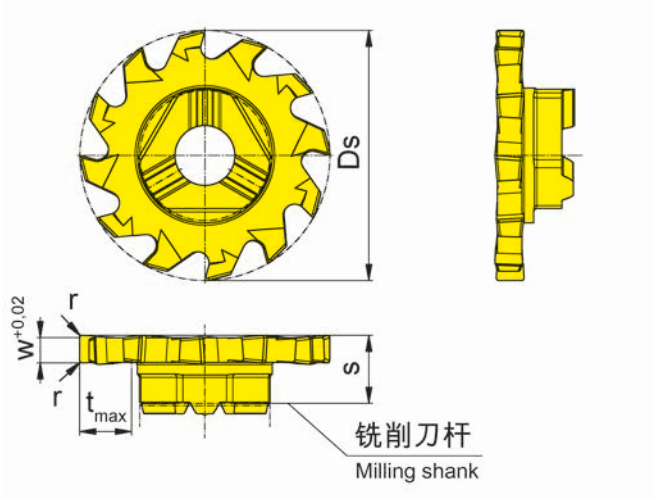

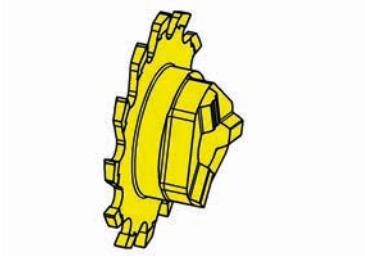

图示=右手型
Picture = right hand cutting version

硬质合金牌号
Carbide grades

▲ 库存
on stock

Δ 4周
4 weeks

产品型号 Part number	Ds	w	s	r	t_{max}	Z	HIS	AN25	EG35	EG55	IG35	TI25
713.0025.00	21.7	0.25	5.9	-	2.3	12	313113R		▲		Δ	
713.0030.00	21.7	0.3	5.9	-	2.3	12	313113R		▲		Δ	
713.0040.00	21.7	0.4	5.9	-	2.3	12	313113R	Δ		▲		
713.0050.00	21.7	0.5	5.9	-	2.8	12	313113R	Δ		▲		
713.0060.00	21.7	0.6	5.9	-	4.5	12	313113R		▲		Δ	
713.0070.00	21.7	0.7	5.9	-	4.5	12	313113R		▲		Δ	
713.0080.00	21.7	0.8	5.9	-	4.5	12	313113R	Δ		▲		
713.0090.00	21.7	0.9	5.9	-	4.5	12	313113R		▲		Δ	
713.0100.00	21.7	1	5.9	-	4.5	12	313113R			▲		▲
713.0150.00	21.7	1.5	5.9	-	4.5	12	313113R			▲		▲
713.0200.00	21.7	2	5.9	0.2	4.5	12	313113R			▲		▲
713.0250.00	21.7	2.5	5.9	0.2	4.5	12	313113R			▲		▲
713.0300.00	21.7	3	5.9	0.2	4.5	12	313113R			▲		▲

	AN25	EG35	EG55	IG35	TI25
P	●	●	●	-	●
M	o	●	o	●	●
K	-	o	o	-	●
N	-	-	-	-	●
S	-	-	-	●	●
H	-	-	-	-	-

2.0mm槽宽以上的刀片是错齿的
from width of groove 2 mm toothing with cross-cut

刀片
Insert

713

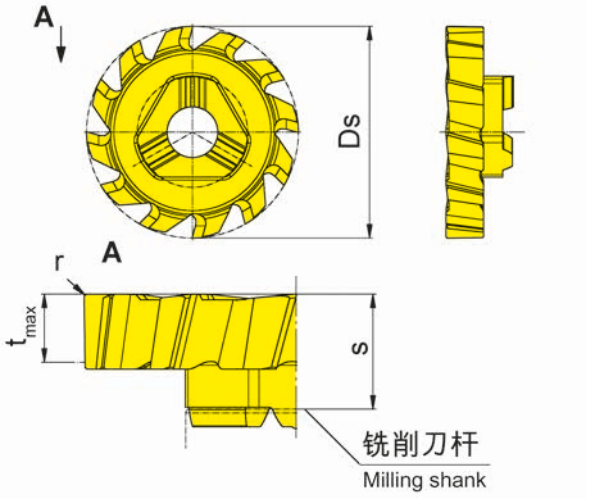

图示=右手型
Picture = right hand cutting version

硬质合金牌号
Carbide grades

▲ 库存
on stock

Δ 4周
4 weeks

产品型号 Part number	Ds	Z	r	t_{max}	s	HIS		EG55	TI25
713.PL35.15.02	21.7	12	0.2	3.5	5.9	313113R		▲	▲
							P	●	●
							M	o	●
							K	o	●
							N	-	●
							S	-	●
							H	-	-

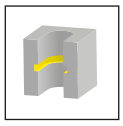

z9

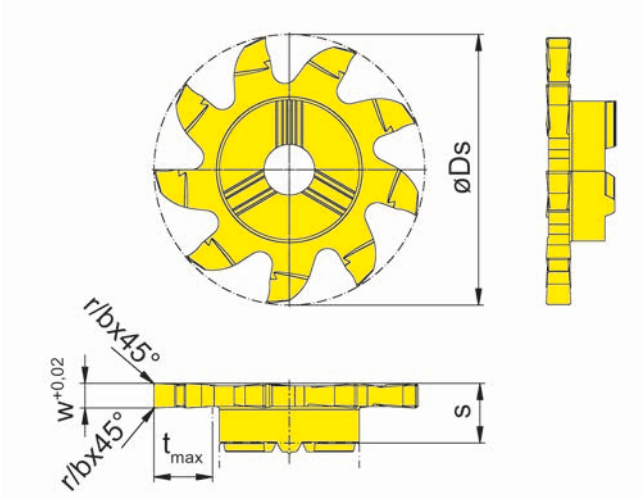

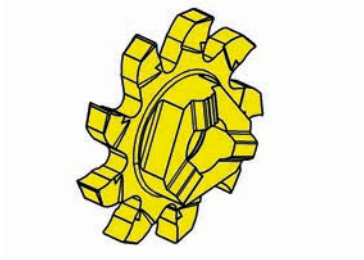

图示=右手型
Picture = right hand cutting version

硬质合金牌号
Carbide grades

▲ 库存
on stock

Δ 4周
4 weeks

产品型号 Part number	Ds	w	s	b x 45°	r	t_{max}	Z	HIS		EG55	IG65
913.0150.00	21.7	1.5	5.7	0.05	-	4.5	9	313113R		▲	Δ
913.0200.00	21.7	2	5.7	-	0.2	4.5	9	313113R		▲	Δ
913.0250.00	21.7	2.5	5.7	-	0.2	4.5	9	313113R		▲	Δ
913.0300.00	21.7	3	5.7	-	0.2	4.5	9	313113R		▲	Δ
									P	●	●
									M	o	●
									K	o	-
									N	-	-
									S	-	o
									H	-	-

槽铣削(圆弧插补铣削)
Groove Milling by circular interpolation

铣刀杆
Milling shank
M328/M328.ST/
M328.ER

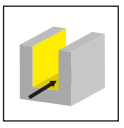

页/Page
152-157

常规刀柄
Basic Holder
WFB

页/Page
158

螺纹锁紧铣刀
Screw-in cutter
M328.M

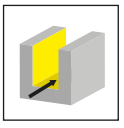

页/Page
159

刀片
Insert
325/328/628/928

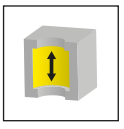

页/Page
160

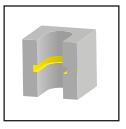

页/Page
161, 164-165,
170-172, 175

页/Page
162, 169

页/Page
163

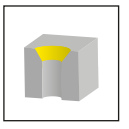

页/Page
166, 174

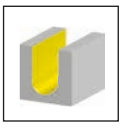

页/Page
167-168

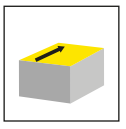

页/Page
173

M328

铣刀杆

带可转位刀片

孔径自Ø 28 mm

Milling shank with exchangeable insert

frome bore Ø 28 mm

铣刀杆
Milling shank

M328

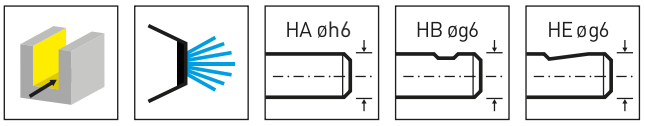

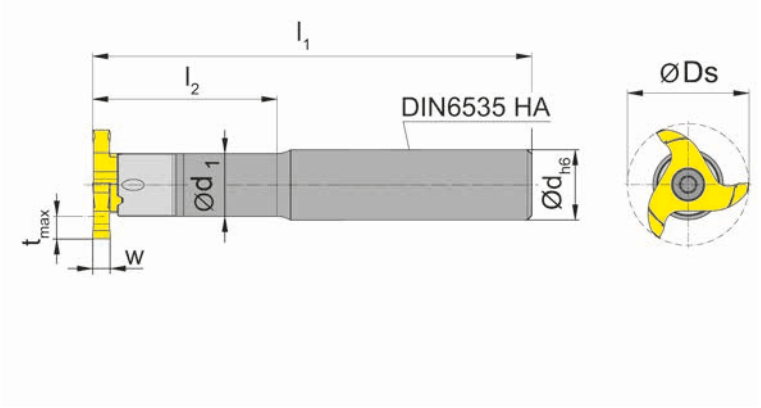

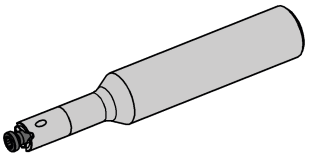

产品型号 Part number	d	l_1	l_2	d_1	形式 Form	HWS
M328.0016.01A	16	100	42	14.3	A	328143R
M328.0016.02A	16	130	60	14.3	A	328143R
M328.0016.03A	16	160	85	14.3	A	328143R
M328.0020.01A	20	100	42	14.3	A	328143R
M328.0020.02A	20	130	60	14.3	A	328143R
M328.0020.03A	20	160	85	14.3	A	328143R
M328.0016.01B	16	100	42	14.3	B	328143R
M328.0016.02B	16	130	60	14.3	B	328143R
M328.0016.03B	16	160	85	14.3	B	328143R
M328.0020.01B	20	100	42	14.3	B	328143R
M328.0020.02B	20	130	60	14.3	B	328143R
M328.0020.03B	20	160	85	14.3	B	328143R
M328.0016.01E	16	100	42	14.3	E	328143R
M328.0016.02E	16	130	60	14.3	E	328143R
M328.0016.03E	16	160	85	14.3	E	328143R
M328.0020.01E	20	100	42	14.3	E	328143R
M328.0020.02E	20	130	60	14.3	E	328143R
M328.0020.03E	20	160	85	14.3	E	328143R

w,Ds,tmax见刀片
w, Ds, tmax see inserts

配件
Spare Parts

铣刀杆 Milling shank	锁紧螺钉 Clamping Screw	TORX PLUS®扳手 TORX PLUS® Wrench
M328...	**5.14T20P**	**T20PQ**

铣刀杆
Milling shank

M328

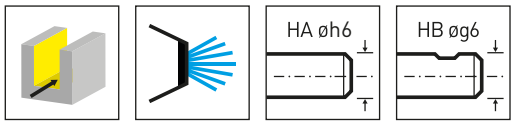

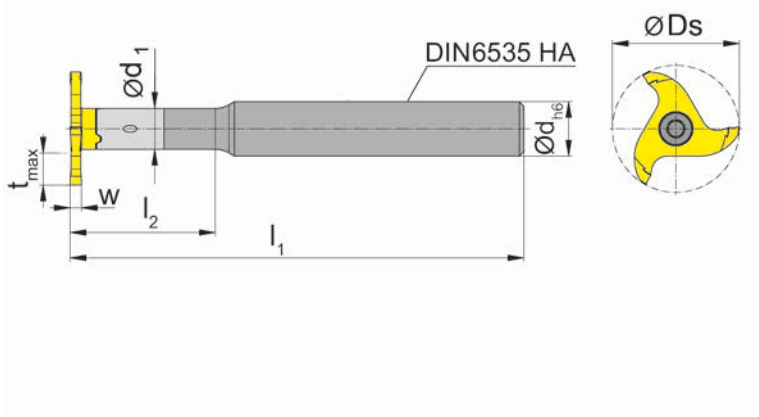

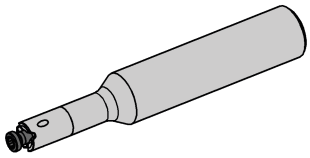

产品型号 Part number	d	l_1	l_2	d_1	形式 Form	HWS
M328.0909.01A	9	114.3	-	9	A	328114R
M328.0912.01A	12	100	32	9	A	328114R
M328.0912.01B	12	100	32	9	B	328114R

w,Ds,tmax见刀片
w, Ds, tmax see inserts

M328.0909.01A=无内冷!
Toolholder M328.0909.01A = no through coolant supply!

配件
Spare Parts

铣刀杆 Milling shank	锁紧螺钉 Clamping Screw	TORX PLUS®扳手 TORX PLUS® Wrench
M328...	**5.14T20P**	**T20PQ**

铣刀杆
Milling shank

M328.ST

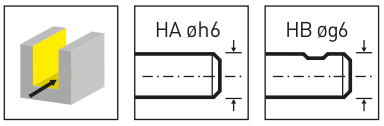

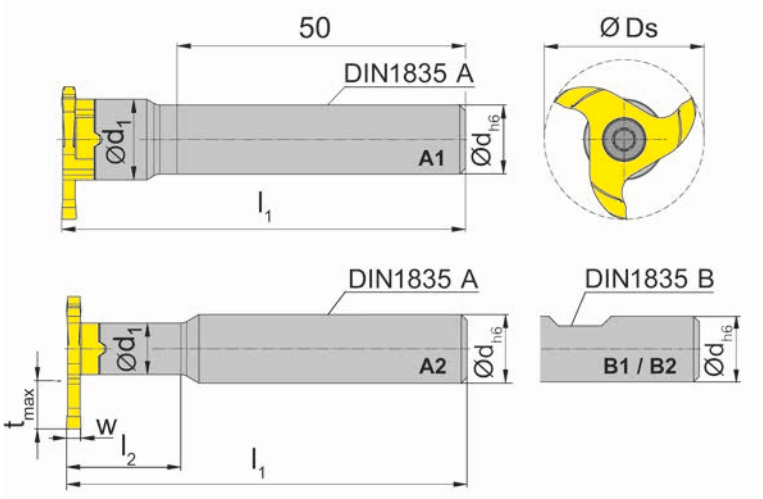

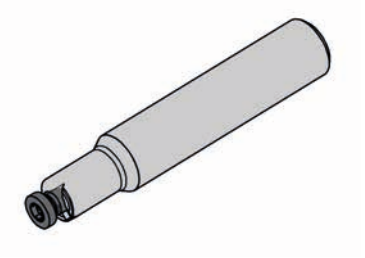

产品型号 Part number	d	l_1	l_2	d_1	形式 Form	HWS
M328.ST12.01A	12	70	-	14	A1	328143R
M328.ST13.01A	13	70	-	14	A1	328143R
M328.ST12.2.01A	12	70	20	9	A2	328114R
M328.ST16.01A	16	90	36	14	A2	328143R
M328.ST20.01A	20	100	36	14	A2	328143R
M328.ST12.01B	12	70	-	14	B1	328143R
M328.ST12.2.01B	12	70	20	9	B2	328114R
M328.ST16.01B	16	90	36	14	B2	328143R
M328.ST20.01B	20	100	36	14	B2	328143R

w,Ds,tmax见刀片
w, Ds, tmax see inserts

配件
Spare Parts

铣刀杆 Milling shank	锁紧螺钉 Clamping Screw	TORX PLUS®扳手 TORX PLUS® Wrench
M328...	**5.14T20P**	**T20PQ**

铣刀杆
Milling shank

M328.ER

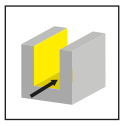

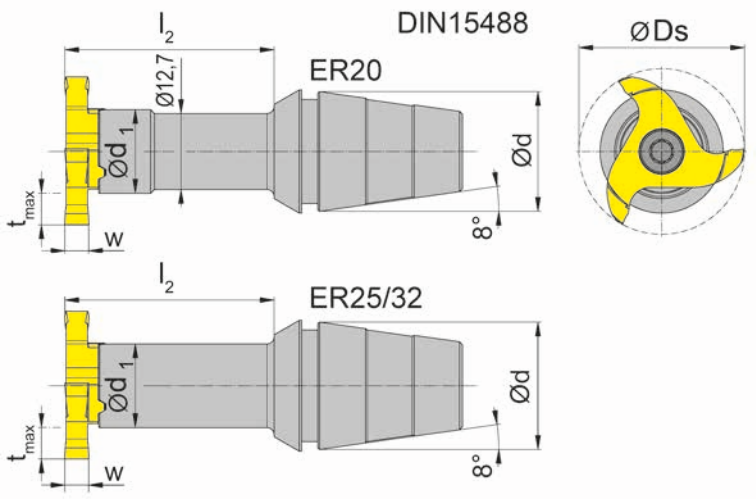

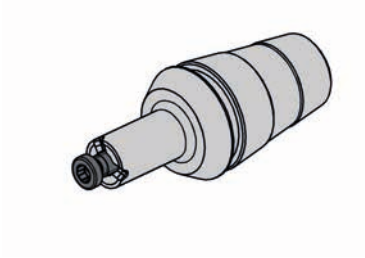

产品型号 Part number	d	l_2	d_1	锁紧螺母 Clamping nut	HWS
M328.ER20.02	20	35	14	ER20.6499/ERM20.6499	328143R
M328.ER25.02	25	35	14	ER25.6499	328143R
M328.ER32.02	32	35	14	ER32.6499	328143R

w,Ds,tmax见刀片
w, Ds, tmax see inserts

铣刀杆不包含夹紧螺母-需要单独订购！
Clamping nut is not combined with milling shank - separate order required!

配件
Spare Parts

铣刀杆 Milling shank	锁紧螺钉 Clamping Screw	TORX PLUS®扳手 TORX PLUS® Wrench
M328...	**5.14T20P**	**T20PQ**

铣刀杆
Milling shank

M328.ER

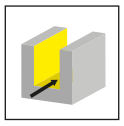

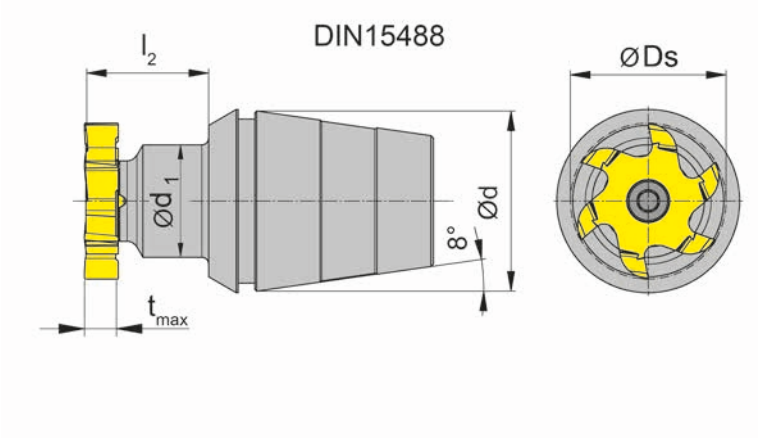

产品型号 Part number	d	l_2	d_1	锁紧螺母 Clamping nut	HWS
M328.ER25.16.01	25	21.7	15	ER25.6499	328143R
M328.ER32.16.01	32	21.7	20	ER32.6499	328143R

tmax和Ds见刀片
tmax and Ds see inserts

铣刀杆不包含夹紧螺母-需要单独订购！
Clamping nut is not combined with milling shank - separate order required!

配件
Spare Parts

铣刀杆 Milling shank	锁紧螺钉 Clamping Screw	TORX PLUS®扳手 TORX PLUS® Wrench
M328...	**5.14T20P**	**T20PQ**

铣刀杆
Milling shank

M328

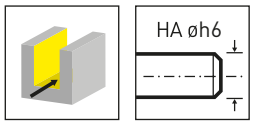

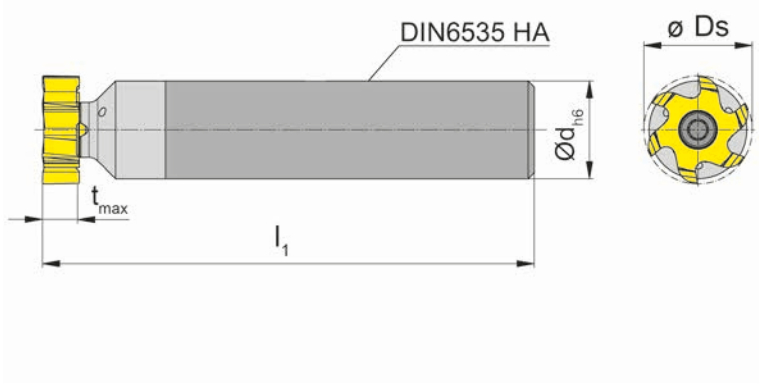

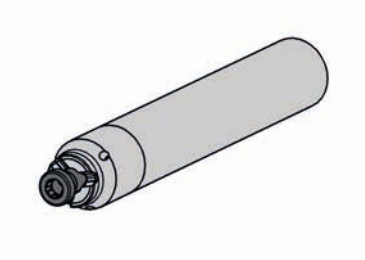

产品型号 Part number	d	l_1	形式 Form	HWS
M328.0016.D.00A	16	80	A	328143R
M328.0020.D.00A	20	80	A	328143R

tmax和Ds见刀片
tmax and Ds see inserts

配件
Spare Parts

铣刀杆 Milling shank	锁紧螺钉 Clamping Screw	TORX PLUS®扳手 TORX PLUS® Wrench
M328...	**5.14T20P**	**T20PQ**

WFB

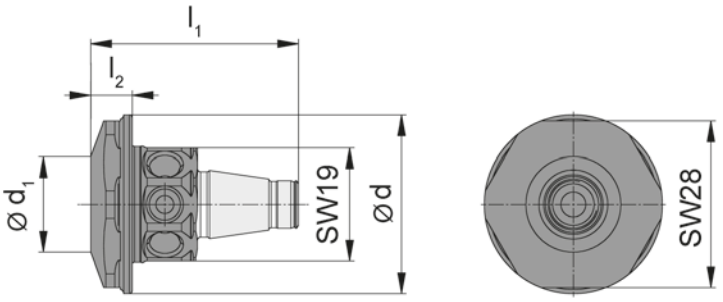

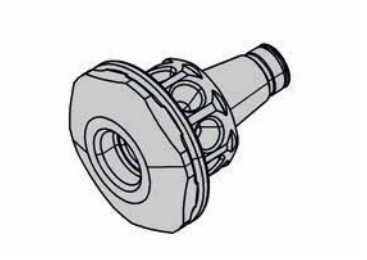

产品型号 Part number	l_1	l_2	d_1	d
WFB.2012.M081.01	35	7	16	30

配合螺纹锁紧型铣刀
for Screw-in cutter

螺纹锁紧铣刀
Screw-in cutter

M328.M

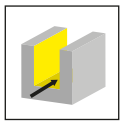

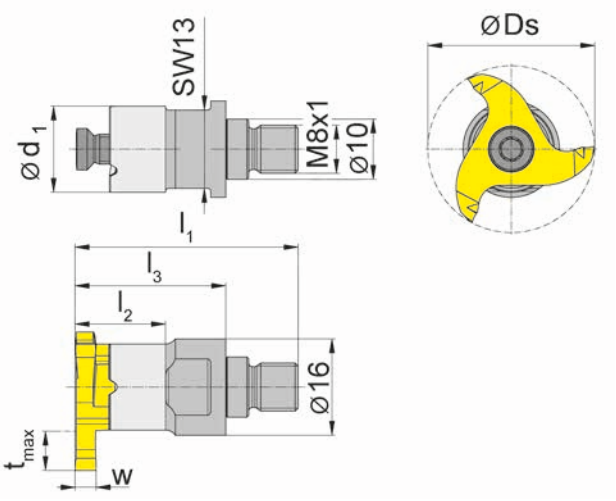

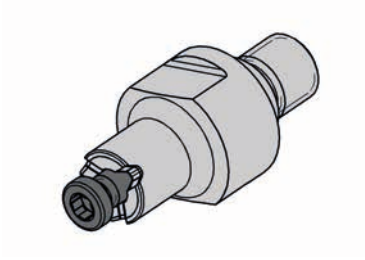

产品型号 Part number	l_1	l_2	l_3	d_1	SW	HWS
M328.M081.01	37	15	25	14.3	13	328143R

w,Ds,tmax见刀片
w, Ds, tmax see inserts

配件
Spare Parts

螺纹锁紧铣刀 Screw-in cutter	锁紧螺钉 Clamping Screw	TORX PLUS®扳手 TORX PLUS® Wrench
M328.M081.01	**5.14T20P**	**T20PQ**

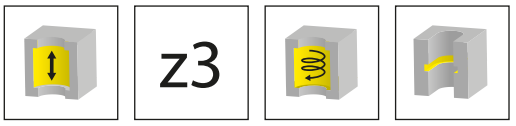

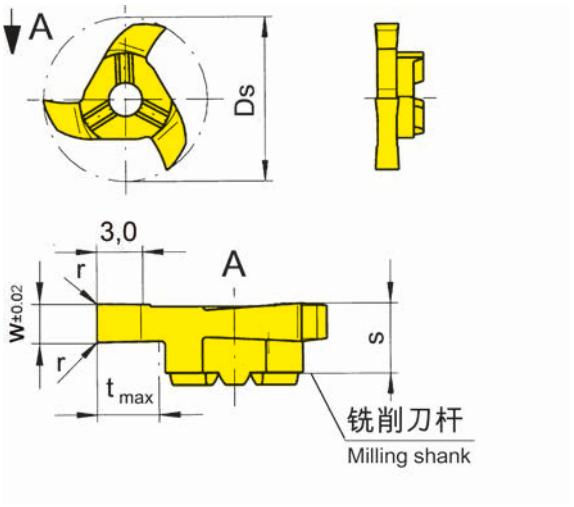

硬质合金牌号
Carbide grades

图示=右手型
Picture = right hand cutting version

▲ 库存
on stock

Δ 4周
4 weeks

产品型号 Part number	Ds	w	s	r	t_{max}	Z	HIS		AS45	TN35
325.0350.52	24.8	3.5	5.7	0.2	5	3	328143R		▲	▲
								P	●	●
								M	●	●
								K	●	●
								N	o	●
								S	●	●
								H	-	-

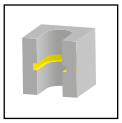

z3

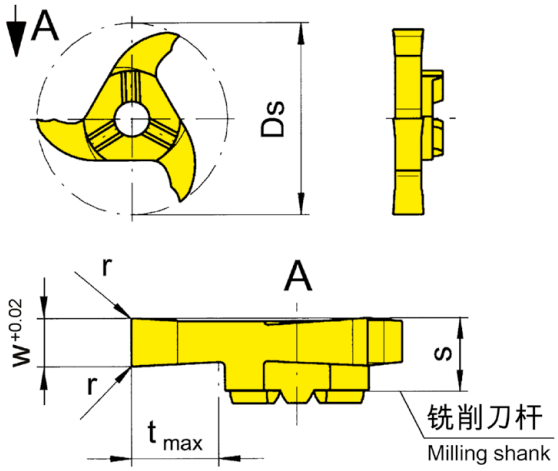

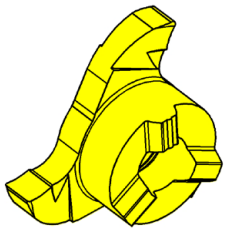

图示=右手型
Picture = right hand cutting version

硬质合金牌号
Carbide grades

▲ 库存
on stock

Δ 4周
4 weeks

产品型号 Part number	Ds	w	s	r	t_{max}	Z	HIS	AS45	TN35
328.0200.00	27.7	2	5.7	0.2	6.5	3	328143R	▲	▲
328.0250.00	27.7	2.5	5.7	0.2	6.5	3	328143R	▲	▲
328.0300.00	27.7	3	5.7	0.2	6.5	3	328143R	▲	▲
328.0350.00	27.7	3.5	5.7	0.2	6.5	3	328143R	▲	▲
328.0400.00	27.7	4	5.7	0.2	6.5	3	328143R	▲	▲
328.0500.00	27.7	5	5.7	0.2	6.5	3	328143R	▲	▲
328.0600.00	27.7	6	7	0.2	6.5	3	328143R	▲	▲
328.1000.00	27.7	10	10	0.2	6.5	3	328143R	▲	▲

	AS45	TN35
P	●	●
M	●	●
K	●	●
N	o	●
S	●	●
H	-	-

刀片328.1000.00错齿设计（有效齿数为1），刀片328.0600.00断屑槽设计（有效齿数为3）！
Insert 328.1000.00 with staggered tooth (Z=1) and insert 328.0600.00 with chip divider (Z=3)!

s = 5.7 mm 刀片使用螺钉 5.14T20P
s = 7 mm 刀片使用螺钉 5.17T20P
s = 10 mm 刀片使用螺钉 5.13T20P
For Insert s = 5.7 mm use screw 5.14T20P
For Insert w = 7 mm use screw 5.17T20P
For Insert w = 10 mm use screw 5.13T20P

z3

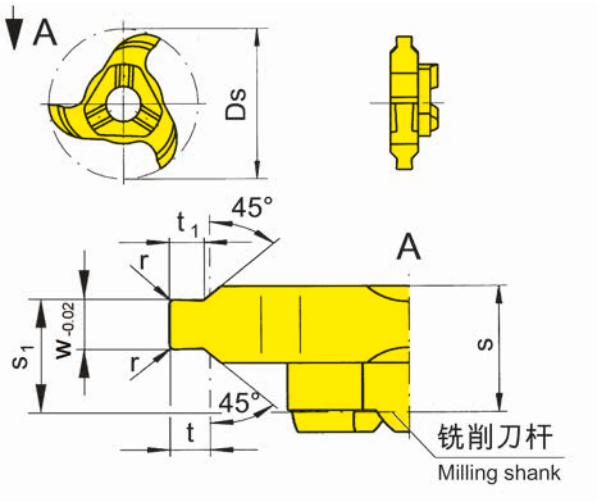

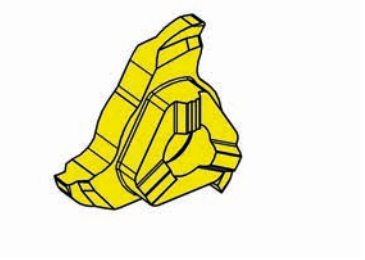

图示=左手型切削
Picture = left hand cutting version

硬质合金牌号
Carbide grades

▲ 库存
on stock

Δ 4周
4 weeks

产品型号 Part number	Ds	Nw	w	t_1	s	s_1	r	t_{max}	Z	HIS		AS45
328.1307.30	27.7	1.3	1.41	0.65	5.95	4.9	-	0.7	3	328143R		▲
328.1812.35	27.7	1.85	1.96	1.21	5.95	5.1	0.2	1.25	3	328143R		▲
											P	●
											M	●
											K	●
											N	o
											S	●
											H	-

.40 | z3

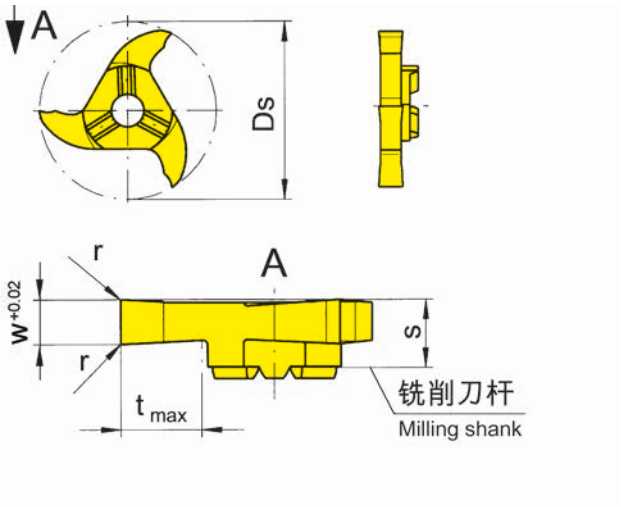

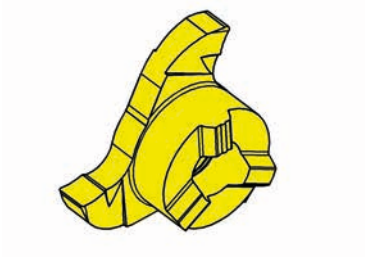

硬质合金牌号
Carbide grades

图示=右手型
Picture = right hand cutting version

▲ 库存
on stock

Δ 4周
4 weeks

产品型号 Part number	Ds	w	s	r	t_{max}	Z	HIS		TI25
328.0250.40	27.7	2.5	5.7	0.2	6.5	3	328143R		▲
328.0300.40	27.7	3	5.7	0.2	6.5	3	328143R		▲
328.0350.40	27.7	3.5	5.7	0.2	6.5	3	328143R		▲
328.0400.40	27.7	4	5.7	0.2	6.5	3	328143R		▲

P	-
M	-
K	-
N	●
S	-
H	-

可以提供浅切深的槽宽0.5mm以下的刀片。
Inserts for widths of groove tmax down to 0,5 mm can be delivered with reduced depth upon request.

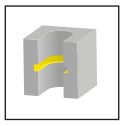

z3

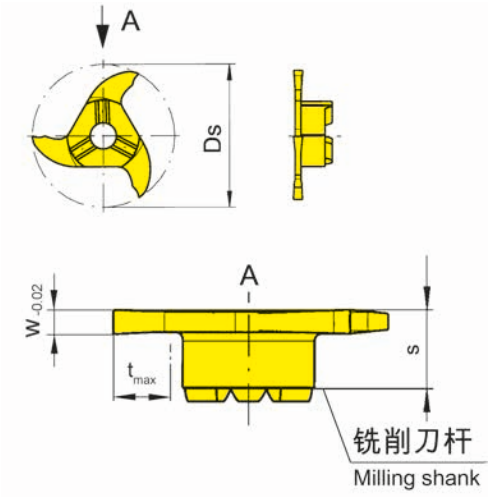

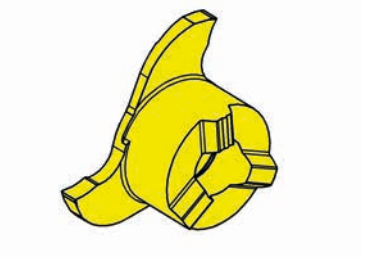

图示=右手型
Picture = right hand cutting version

硬质合金牌号
Carbide grades

▲ 库存
on stock

Δ 4周
4 weeks

产品型号 Part number	Ds	w	s	t_{max}	Z	HIS		TI25	TN35
328.0082.1.00	27.7	0.82	5.7	5	3	328143R		▲	▲
							P	●	●
							M	●	●
							K	●	●
							N	●	●
							S	●	●
							H	-	-

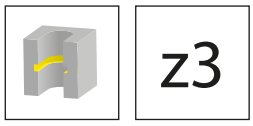

z3

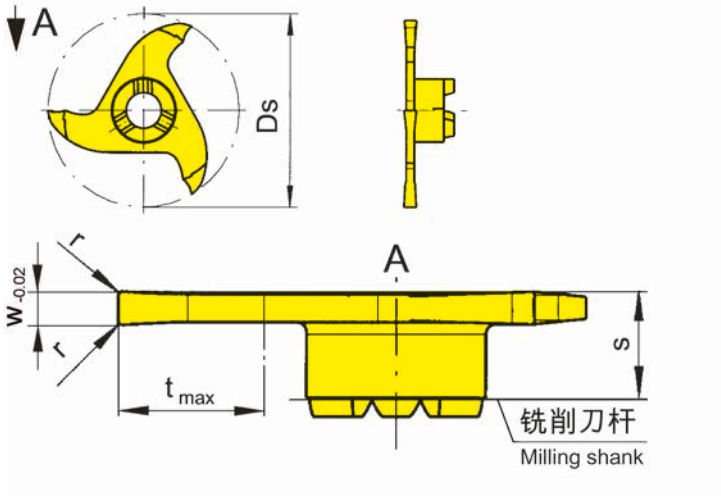

图示=右手型
Picture = right hand cutting version

硬质合金牌号
Carbide grades

▲ 库存
on stock

Δ 4周
4 weeks

产品型号 Part number	Ds	w	s	r	t_{max}	Z	HIS		AS45	TI25	TN35
328.0110.2.00	28	1.1	5.7	0.2	9.3	3	328114R			▲	▲
328.0120.2.00	28	1.2	5.7	0.2	9.3	3	328114R			▲	▲
328.0132.2.00	28	1.32	5.7	0.15	9.3	3	328114R			▲	▲
328.0150.2.00	28	1.5	5.7	0.2	9.3	3	328114R		▲	▲	▲
328.0160.2.00	28	1.6	5.7	0.2	9.3	3	328114R		▲	▲	▲
328.0200.2.00	28	2	5.7	0.2	9.3	3	328114R		▲	▲	▲
328.0250.2.00	28	2.5	5.7	0.2	9.3	3	328114R		▲	▲	▲
								P	●	●	●
								M	●	●	●
								K	●	●	●
								N	o	●	●
								S	●	●	●
								H	-	-	-

刀片
Insert

328

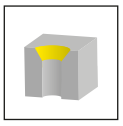

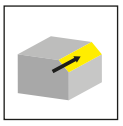

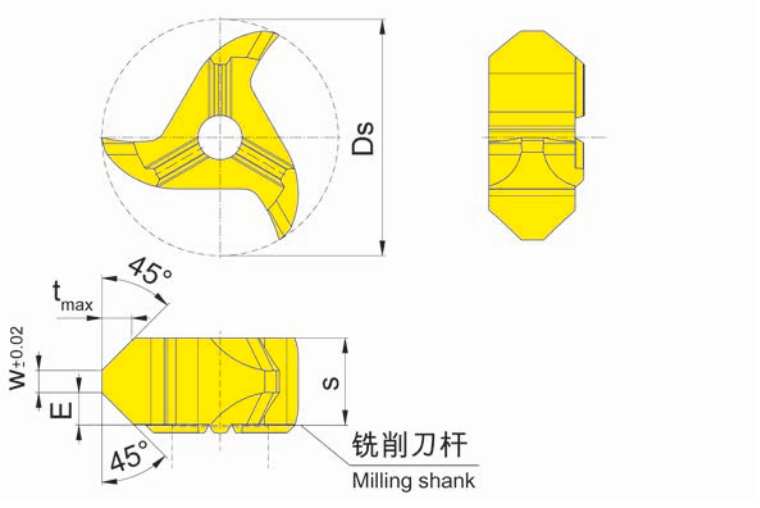

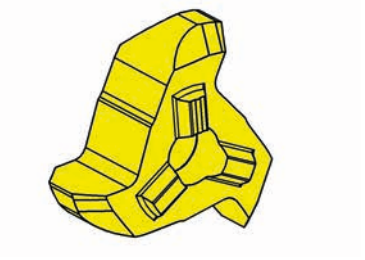

图示=右手型
Picture = right hand cutting version

硬质合金牌号
Carbide grades

▲ 库存
on stock

Δ 4周
4 weeks

产品型号 Part number	Ds	E	s	w	t_{max}	Z	HIS		TA45
328.4545.35.00	27.7	3.8	10.2	2.6	3.5	3	328143R		▲
								P	●
								M	●
								K	●
								N	●
								S	●
								H	-

刀片**328.4545.35.00** 必须使用加长螺钉 5.13T20P.
For insert 328.4545.35.00 please use only the longer screw 5.13T20P.

z3

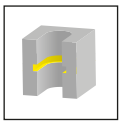

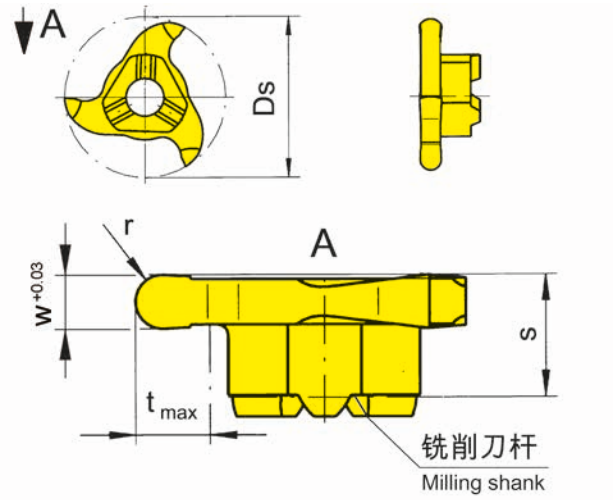

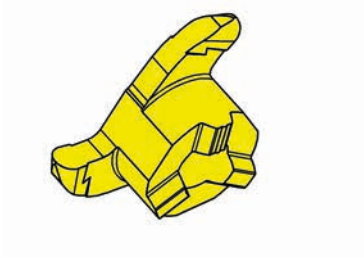

图示=右手型
Picture = right hand cutting version

硬质合金牌号
Carbide grades

▲ 库存
on stock

Δ 4周
4 weeks

产品型号 Part number	Ds	w	s	r	t_{max}	Z	HIS		AS45
328.0010.20	27.7	2	5.7	1	6.5	3	328143R		▲
328.0014.28	27.7	2.8	5.7	1.4	6.5	3	328143R		▲
328.0015.30	27.7	3	5.7	1.5	6.5	3	328143R		▲
328.0020.40	27.7	4	5.7	2	6.5	3	328143R		▲
								P	●
								M	●
								K	●
								N	o
								S	●
								H	-

z6

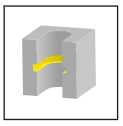

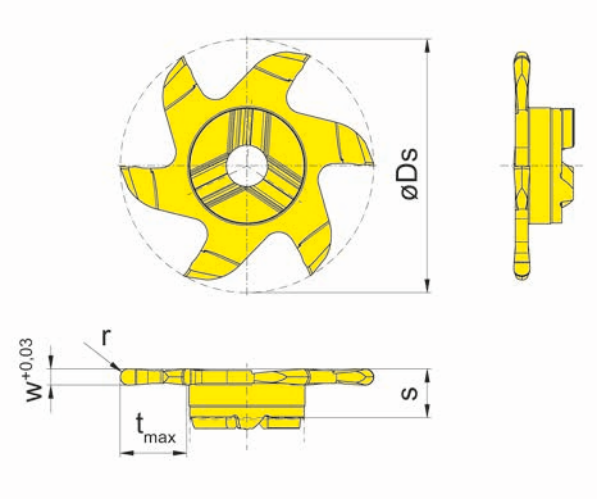

硬质合金牌号
Carbide grades

图示=右手型
Picture = right hand cutting version

▲ 库存
on stock

Δ 4周
4 weeks

产品型号 Part number	Ds	w	s	r	t_{max}	Z	HIS		AS45
628.0010.20	27.7	2	6.1	1	6.5	6	328143R		▲
628.0015.30	27.7	3	6.1	1.5	6.5	6	328143R		▲
628.0020.40	27.7	4	6.1	2	6.5	6	328143R		▲
								P	●
								M	●
								K	●
								N	o
								S	●
								H	-

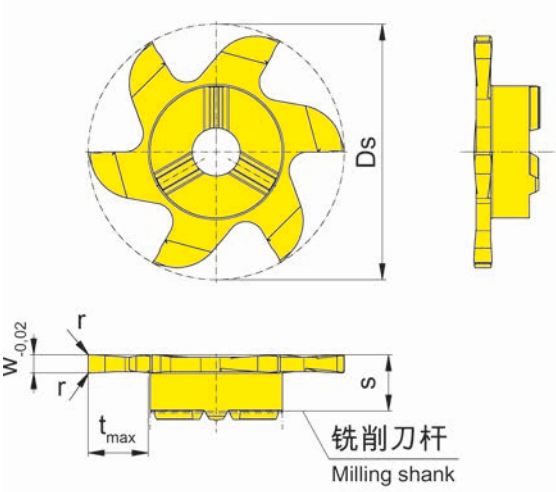

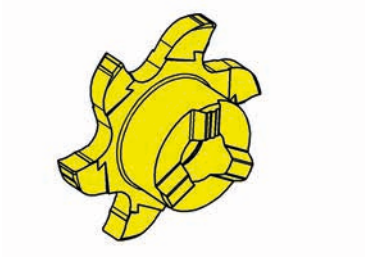

图示=右手型
Picture = right hand cutting version

▲ 库存
on stock

Δ 4周
4 weeks

硬质合金牌号
Carbide grades

产品型号 Part number	Ds	Nw	w	s	r	t_{max}	Z	HIS		AN25	AS45	RC25	TI25
628.0080.00	27.7	0.8	0.8	6.1	-	6.5	6	328143R		Δ		▲	
628.0130.00	27.7	1.3	1.41	6.1	-	6.5	6	328143R			▲		▲
628.0160.00	27.7	1.6	1.71	6.1	-	6.5	6	328143R			▲		▲
628.0185.00	27.7	1.85	1.96	6.1	0.2	6.5	6	328143R			▲		▲
628.0215.00	27.7	2.15	2.26	6.1	0.2	6.5	6	328143R			▲		▲
628.0265.00	27.7	2.65	2.76	6.1	0.2	6.5	6	328143R			▲		▲
									P	●	●	●	●
									M	o	●	●	●
									K	-	●	●	●
									N	-	o	-	●
									S	-	●	-	●
									H	-	-	-	-

z6

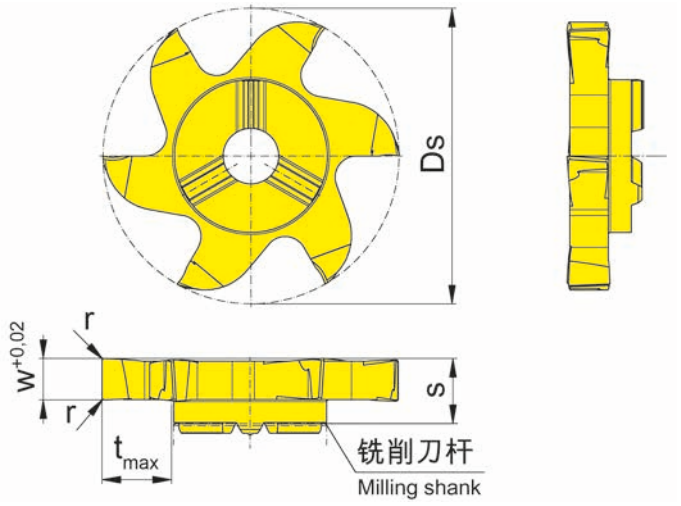

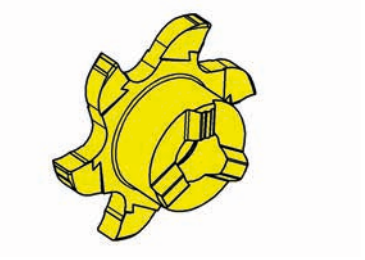

图示=右手型
Picture = right hand cutting version

硬质合金牌号
Carbide grades

▲ 库存
on stock

Δ 4周
4 weeks

产品型号 Part number	Ds	w	s	r	t_{max}	Z	HIS		AS45	TH35	TI25
628.0150.00	27.7	1.5	6.1	-	6.5	6	328143R		▲		
628.0200.00	27.7	2	6.1	0.2	6.5	6	328143R		▲		
628.0250.00	27.7	2.5	6.1	0.2	6.5	6	328143R		▲		▲
628.0300.00	27.7	3	6.1	0.2	6.5	6	328143R		▲		▲
628.0350.00	27.7	3.5	6.1	0.2	6.5	6	328143R		▲		▲
628.0400.00	27.7	4	6.1	0.2	6.5	6	328143R		▲	▲	▲
								P	●	●	●
								M	●	●	●
								K	●	●	●
								N	o	●	●
								S	●	●	●
								H	-	-	-

可以提供浅切深的槽宽0.5mm以下的刀片。
Inserts for widths of groove tmax down to 0,5 mm can be delivered with reduced depth upon request.

刀片628.0400.00
仅用于l2=max.42mm的刀杆
Insert 628.0400.00
only with toolholder dimension l2 = max. 42 mm

z6

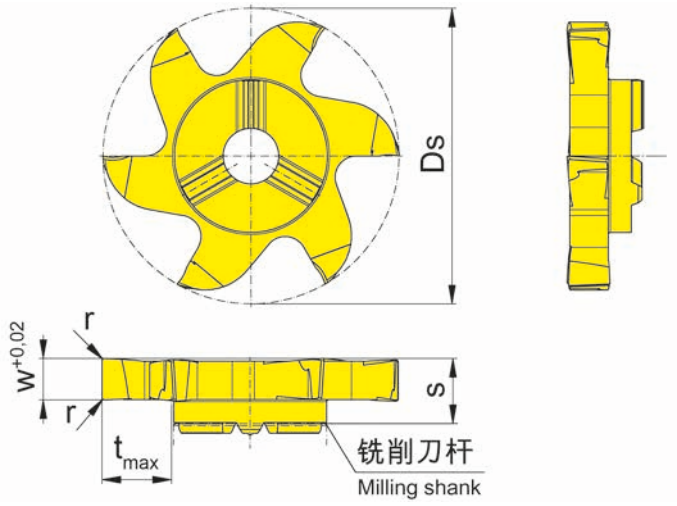

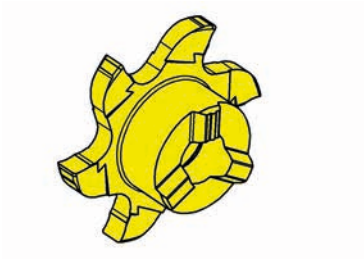

图示=右手型
Picture = right hand cutting version

硬质合金牌号
Carbide grades

▲ 库存
on stock

Δ 4周
4 weeks

产品型号 Part number	Ds	w	s	r	t_{max}	Z	HIS		AS45
628.0300.04	27.7	3	6.1	0.4	6.5	6	328143R		▲
628.0300.08	27.7	3	6.1	0.8	6.5	6	328143R		▲
628.0400.04	27.7	4	6.1	0.4	6.5	6	328143R		▲
628.0400.08	27.7	4	6.1	0.8	6.5	6	328143R		▲
								P	●
								M	●
								K	●
								N	o
								S	●
								H	-

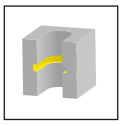

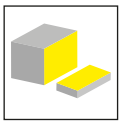

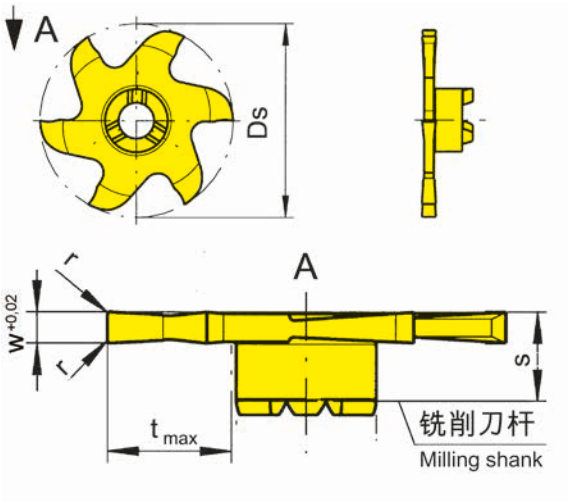

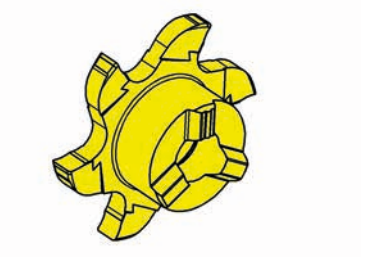

图示=右手型
Picture = right hand cutting version

硬质合金牌号
Carbide grades

▲ 库存
on stock

Δ 4周
4 weeks

产品型号 Part number	Ds	w	s	r	t_{max}	Z	HIS		AS45	TI25
628.0100.2.00	28	1	6.1	-	9.3	6	328114R			▲
628.0120.2.00	28	1.2	6.1	-	9.3	6	328114R			▲
628.0150.2.00	28	1.5	6.1	-	9.3	6	328114R		▲	▲
628.0160.2.00	28	1.6	6.1	-	9.3	6	328114R		▲	▲
628.0200.2.00	28	2	6.1	0.2	9.3	6	328114R		▲	▲
628.0240.2.00	28	2.4	6.1	0.2	9.3	6	328114R		▲	▲
628.0250.2.00	28	2.5	6.1	0.2	9.3	6	328114R		▲	▲
								P	●	●
								M	●	●
								K	●	●
								N	o	●
								S	●	●
								H	-	-

z6

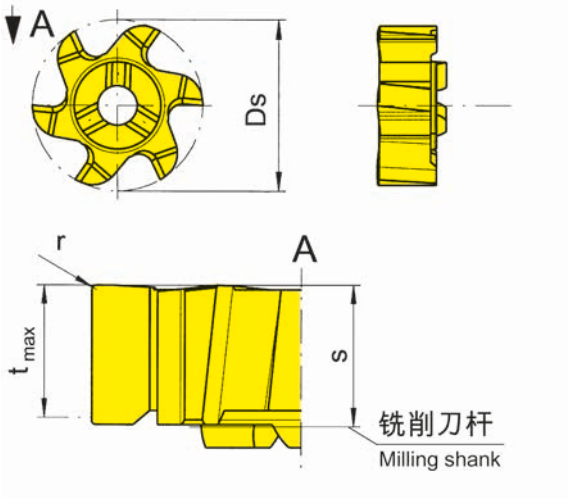

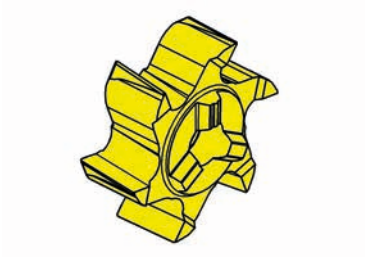

图示=右手型
Picture = right hand cutting version

硬质合金牌号
Carbide grades

▲ 库存
on stock

Δ 4周
4 weeks

产品型号 Part number	Ds	Z	r	t_{max}	s	HIS		AS45	TF45	TI25
628.PL61.62	27.7	6	0.2	5.7	6.1	328143R		▲	▲	▲
							P	●	●	●
							M	●	●	●
							K	●	●	●
							N	o	●	●
							S	●	●	●
							H	-	-	-

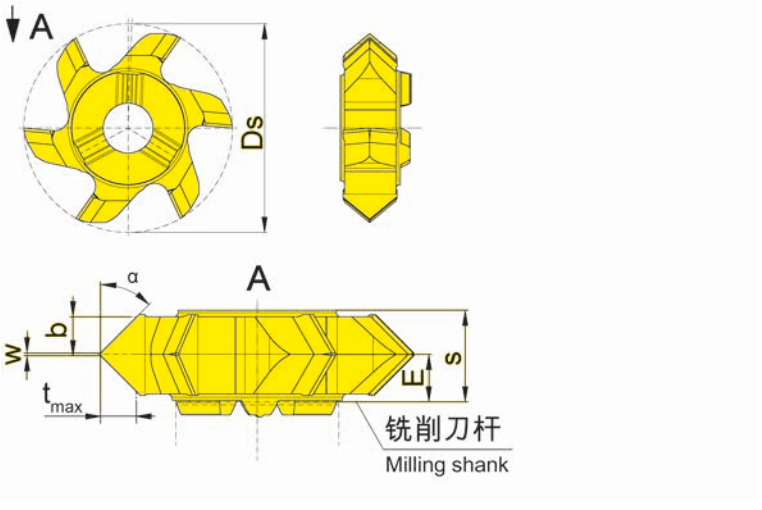

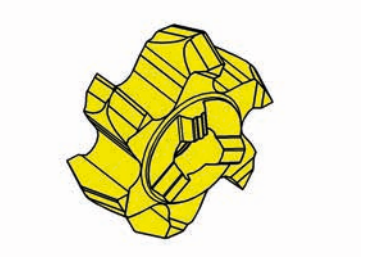

图示=右手型
Picture = right hand cutting version

硬质合金牌号
Carbide grades

▲ 库存
on stock

Δ 4周
4 weeks

产品型号 Part number	Ds	E	s	w	α	b	t_{max}	Z	HIS		AS45	TA45
628.1515.20	27.7	3.2	6.3	0.2	15°	2.8	0.75	6	328143R		▲	
628.2020.20	27.7	3.2	6.3	0.2	20°	2.8	1	6	328143R		▲	
628.3030.20	27.7	3.2	6.3	0.2	30°	2.8	1.6	6	328143R		▲	▲
628.4545.20	27.7	3.2	6.3	0.2	45°	2.8	2.8	6	328143R		▲	▲
										P	●	●
										M	●	●
										K	●	●
										N	o	●
										S	●	●
										H	-	-

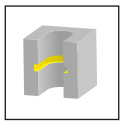

z9

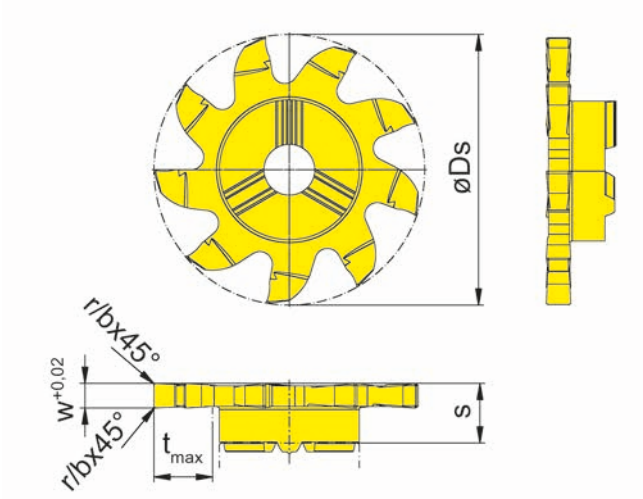

图示=右手型
Picture = right hand cutting version

硬质合金牌号
Carbide grades

▲ 库存
on stock

Δ 4周
4 weeks

产品型号 Part number	Ds	w	s	b x 45°	r	t_{max}	Z	HIS		EG55	IG65
928.0150.00	27.7	1.5	6.1	0.05	-	6.5	9	328143R		▲	Δ
928.0200.00	27.7	2	6.1	-	0.2	6.5	9	328143R		▲	Δ
928.0250.00	27.7	2.5	6.1	-	0.2	6.5	9	328143R		▲	Δ
928.0300.00	27.7	3	6.1	-	0.2	6.5	9	328143R		▲	Δ
									P	●	●
									M	o	●
									K	o	-
									N	-	-
									S	-	o
									H	-	-

槽铣削(圆弧插补铣削)
Groove Milling by circular interpolation

铣刀杆
Milling shank
M332/M332.ST/
M332.ER

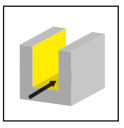

页/Page
178-181

常规刀柄
Basic Holder
WFB

页/Page
182

螺纹锁紧铣刀
Screw-in cutter
M332.M

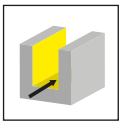

页/Page
183

刀片
Insert
332/632/636/932
939

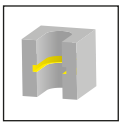

页/Page
184-185, 189-
190, 193-197

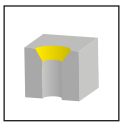

页/Page
186

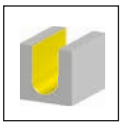

页/Page
187-188

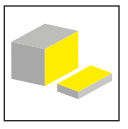

页/Page
191-192, 198

M332

铣刀杆

带可转位刀片

孔径自Ø 32 mm

Milling shank with exchangeable insert

from bore Ø 32 mm

铣刀杆
Milling shank

M332

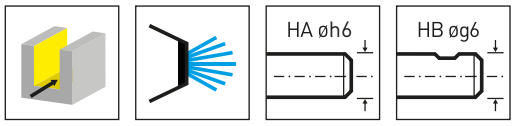

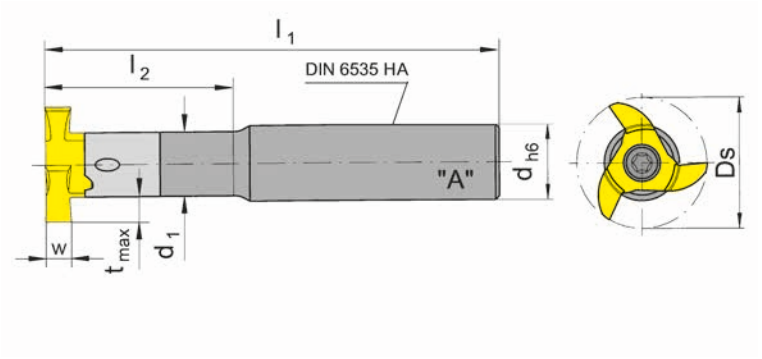

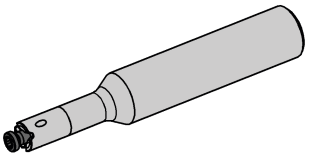

图示=右手型
Picture = right hand cutting version

产品型号 Part number	d	l_1	l_2	d_1	形式 Form	HWS
M332.0016.01A	16	100	42	14.3	A	332143R
M332.0016.02A	16	130	60	14.3	A	332143R
M332.0016.03A	16	160	85	14.3	A	332143R
M332.0020.01A	20	100	42	14.3	A	332143R
M332.0020.02A	20	130	60	14.3	A	332143R
M332.0020.03A	20	160	85	14.3	A	332143R
M332.0016.01B	16	100	42	14.3	B	332143R
M332.0016.02B	16	130	60	14.3	B	332143R
M332.0016.03B	16	160	85	14.3	B	332143R
M332.0020.01B	20	100	42	14.3	B	332143R
M332.0020.02B	20	130	60	14.3	B	332143R
M332.0020.03B	20	160	85	14.3	B	332143R

w,Ds,tmax见刀片
w, Ds, tmax see inserts

配件
Spare Parts

铣刀杆 Milling shank	锁紧螺钉 Clamping Screw	TORX PLUS®扳手 TORX PLUS® Wrench
M332...	**5.17T20P**	**T20PQ**

铣刀杆
Milling shank

M332

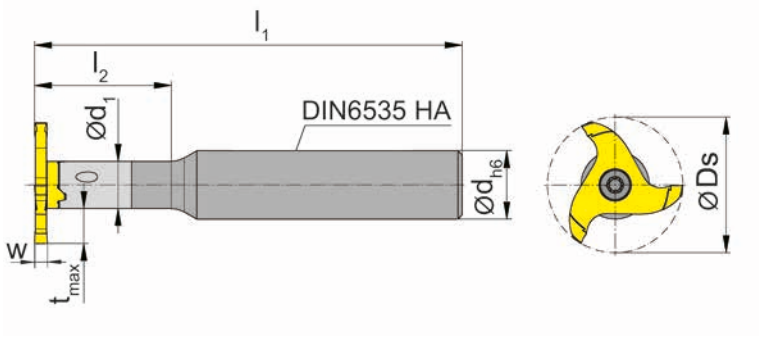

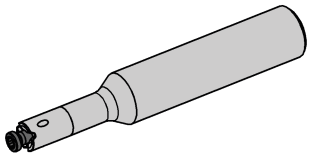

图示=右手型
Picture = right hand cutting version

产品型号 Part number	d	l_1	l_2	d_1	形式 Form	HWS
M332.0012.2.01A	12	100	32	11	A	332110R
M332.0012.3.00A	12	100	-	12	A	332120R
M332.0016.2.02A	16	130	68	11	A	332110R
M332.0016.2.01A	16	100	32	11	A	332110R

w,Ds,tmax见刀片
w, Ds, tmax see inserts

配件
Spare Parts

铣刀杆 Milling shank	锁紧螺钉 Clamping Screw	TORX PLUS®扳手 TORX PLUS® Wrench
M332...	**5.17T20P**	**T20PQ**

铣刀杆
Milling shank

M332.ST

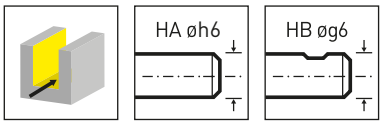

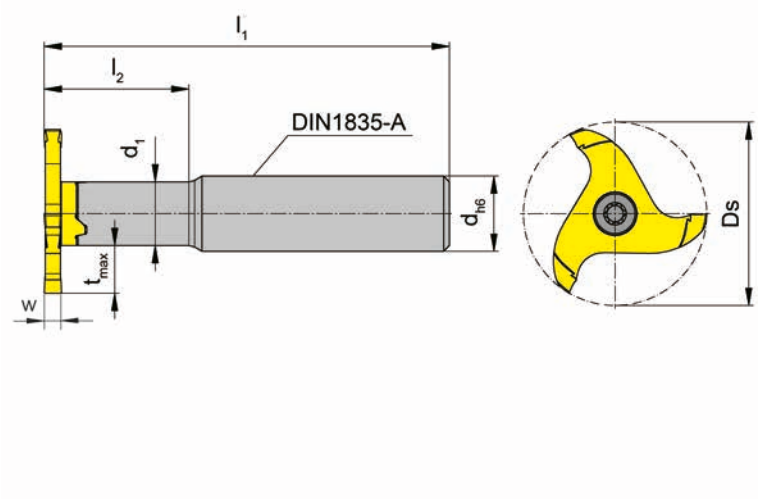

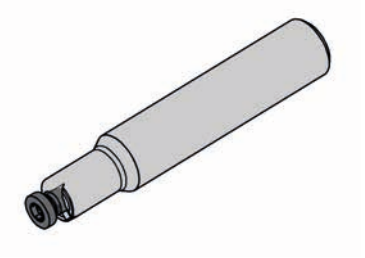

图示=右手型
Picture = right hand cutting version

产品型号 Part number	d	l_1	l_2	d_1	形式 Form	HWS
M332.ST10.2.01A	10	70	25	11	A	332110R
M332.ST12.2.01A	12	70	25	11	A	332110R
M332.ST13.2.01A	13	70	25	11	A	332110R
M332.ST16.01A	16	90	36	14.3	A	332143R
M332.ST20.01A	20	100	36	14.3	A	332143R
M332.ST12.2.01B	12	70	25	11	B	332110R
M332.ST16.01B	16	90	36	14.3	B	332143R

w,Ds,tmax见刀片
w, Ds, tmax see inserts

铣刀杆 M332.ST12.2.01A和 M332.ST13.2.01A适用于增加铣削深度的刀片！
Milling shanks M332.ST12.2.01A, M332.ST12.2.01B and M332.ST13.2.01A are usable for inserts with increased milling depth!

配件
Spare Parts

铣刀杆 Milling shank	锁紧螺钉 Clamping Screw	TORX PLUS®扳手 TORX PLUS® Wrench
M332...	**5.17T20P**	**T20PQ**

铣刀杆
Milling shank

M332.ER

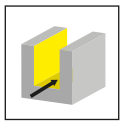

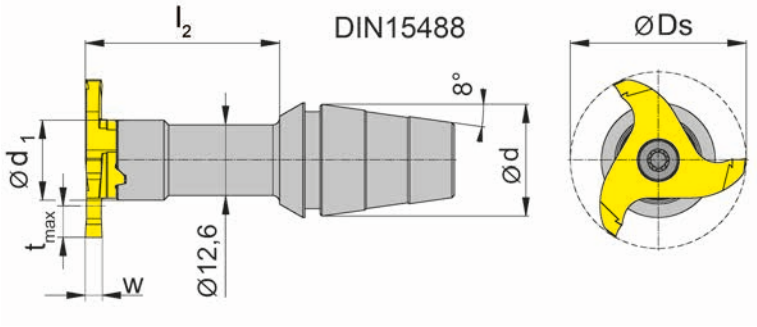

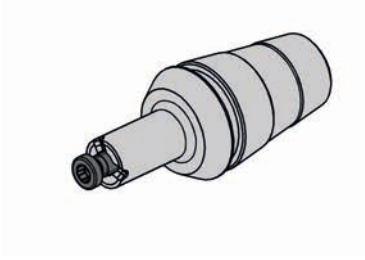

图示=右手型
Picture = right hand cutting version

产品型号 Part number	d	l_2	d_1	锁紧螺母 Clamping nut	HWS
M332.ER20.02	20	35	14.3	ER20.6499/ERM20.6499	332143R

w,Ds,tmax见刀片
w, Ds, tmax see inserts

铣刀杆不包含夹紧螺母-需要单独订购!
Clamping nut is not combined with milling shank - separate order required!

配件
Spare Parts

铣刀杆 Milling shank	锁紧螺钉 Clamping Screw	TORX PLUS®扳手 TORX PLUS® Wrench
M332.ER20.02	**5.17T20P**	**T20PQ**

WFB

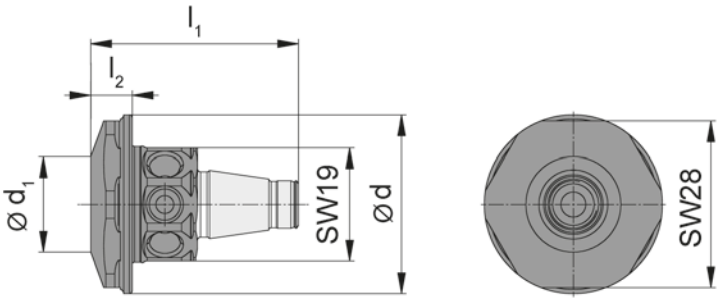

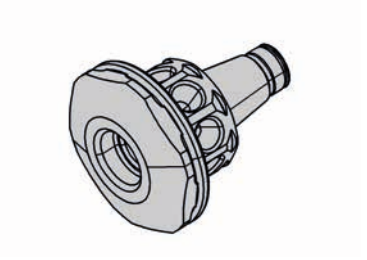

产品型号 Part number	l_1	l_2	d_1	d
WFB.2012.M081.01	35	7	16	30

配合螺纹锁紧型铣刀
for Screw-in cutter

螺纹锁紧铣刀
Screw-in cutter

M332.M

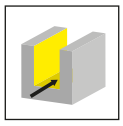

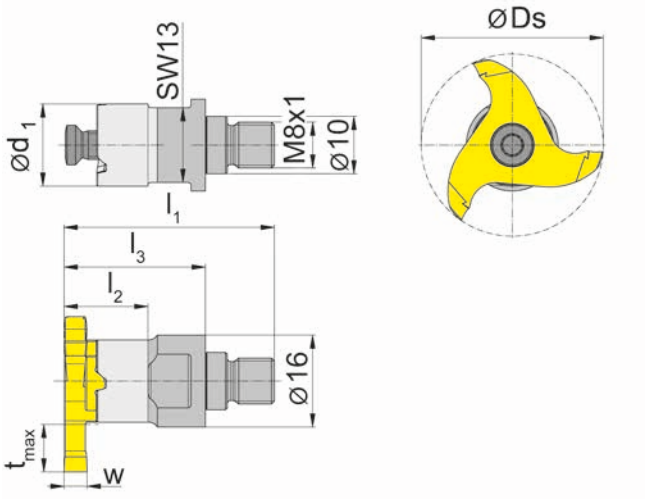

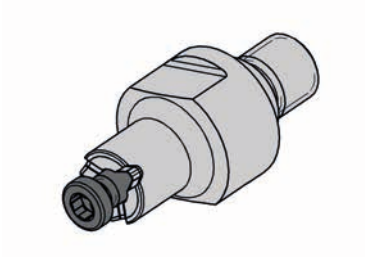

产品型号 Part number	l_1	l_2	l_3	d_1	SW	HWS	HMS
M332.M081.01	37	15	25	14.3	13	332143R	08001

w,Ds,tmax见刀片
w, Ds, tmax see inserts

配件
Spare Parts

螺纹锁紧铣刀 Screw-in cutter	锁紧螺钉 Clamping Screw	TORX PLUS®扳手 TORX PLUS® Wrench
M332.M081.01	**5.17T20P**	**T20PQ**

z3

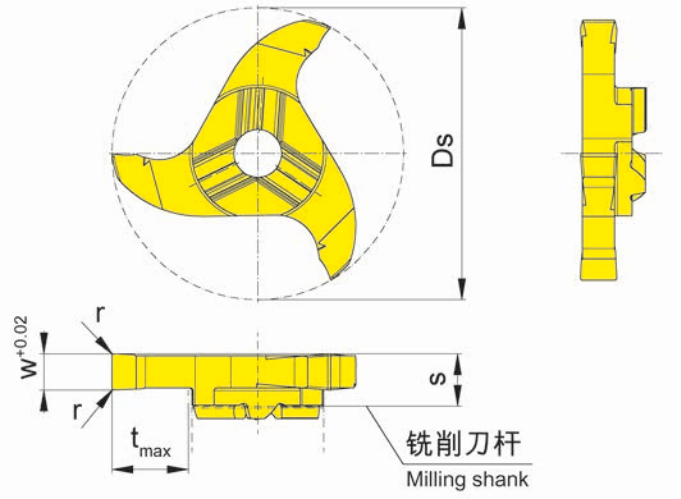

图示=右手型
Picture = right hand cutting version

硬质合金牌号
Carbide grades

▲ 库存
on stock

Δ 4周
4 weeks

产品型号 Part number	Ds	w	s	r	t_{max}	Z	HIS		AS45	TI25
332.0200.00	31.7	2	5.7	0.2	8.3	3	332143R		Δ	▲
332.0250.00	31.7	2.5	5.7	0.2	8.3	3	332143R		Δ	▲
332.0300.00	31.7	3	5.7	0.2	8.3	3	332143R		▲	▲
332.0350.00	31.7	3.5	5.7	0.2	8.3	3	332143R		▲	
332.0400.00	31.7	4	5.7	0.2	8.3	3	332143R		▲	▲
								P	●	●
								M	●	●
								K	●	●
								N	o	●
								S	●	●
								H	-	-

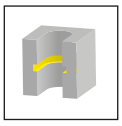

z3

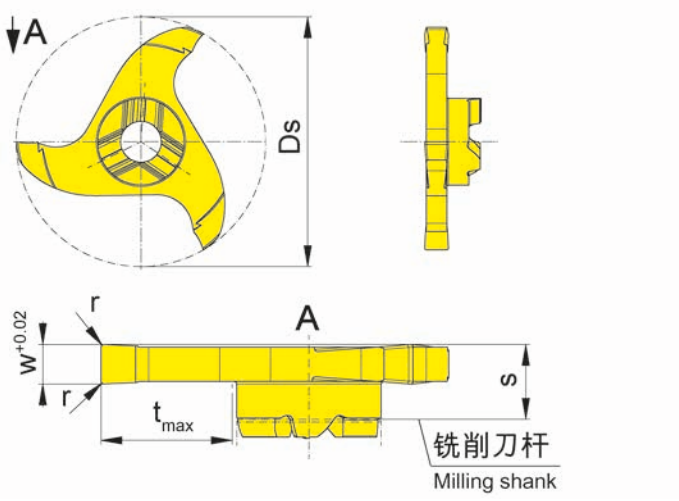

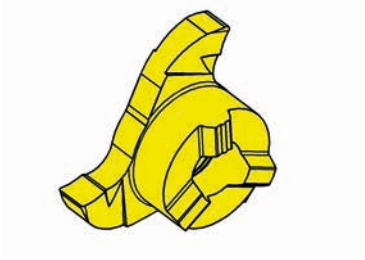

图示=右手型
Picture = right hand cutting version

硬质合金牌号
Carbide grades

▲ 库存
on stock

Δ 4周
4 weeks

产品型号 Part number	Ds	w	s	r	t_{max}	Z	HIS		AS45	TI25
332.0150.2.00	31.7	1.5	5.7	0.2	10	3	332110R		Δ	▲
332.0160.2.00	31.7	1.6	5.7	0.2	10	3	332110R		Δ	▲
332.0200.2.00	31.7	2	5.7	0.2	10	3	332110R		▲	▲
332.0250.2.00	31.7	2.5	5.7	0.2	10	3	332110R		▲	▲
332.0300.2.00	31.7	3	5.7	0.2	10	3	332110R		▲	▲
								P	●	●
								M	●	●
								K	●	●
								N	o	●
								S	●	●
								H	-	-

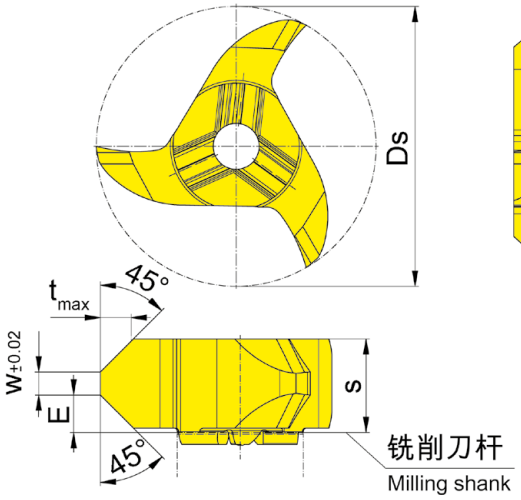

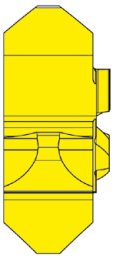

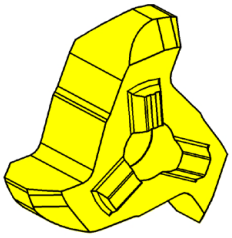

图示=右手型
Picture = right hand cutting version

硬质合金牌号
Carbide grades

▲ 库存
on stock

Δ 4周
4 weeks

产品型号 Part number	Ds	E	s	w	t_{max}	Z	HIS		TA45
332.4545.35.00	31.7	4.25	10.6	2.6	3.5	3	332143R		▲
								P	●
								M	●
								K	●
								N	●
								S	●
								H	-

s = 10.6 mm 刀片使用螺钉 5.13T20P
For Insert s = 10,6 mm use screw 5.13T20P

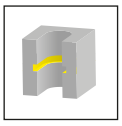

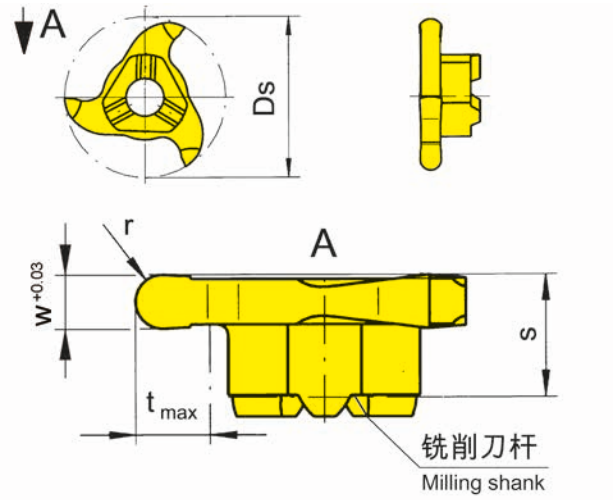

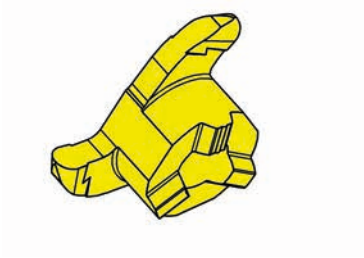

图示=右手型
Picture = right hand cutting version

硬质合金牌号
Carbide grades

▲ 库存
on stock

Δ 4周
4 weeks

产品型号 Part number	Ds	w	s	r	t_{max}	Z	HIS		AS45
332.0010.20	31.7	2	5.7	1	8.3	3	332143R		▲
332.0015.30	31.7	3	5.7	1.5	8.3	3	332143R		▲
332.0020.40	31.7	4	5.7	2	8.3	3	332143R		▲
								P	●
								M	●
								K	●
								N	o
								S	●
								H	-

z6

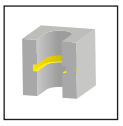

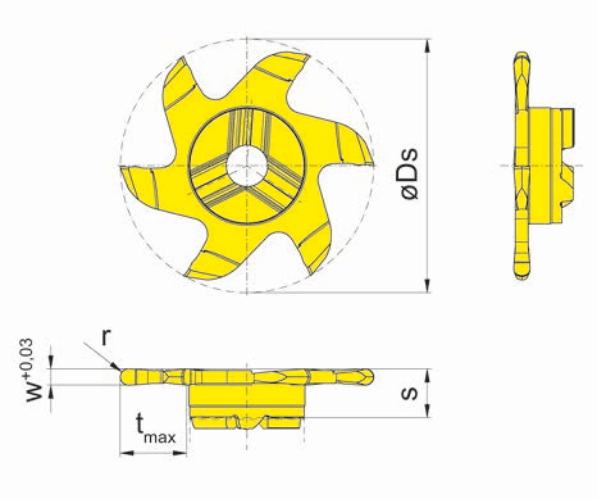

图示=右手型
Picture = right hand cutting version

硬质合金牌号
Carbide grades

▲ 库存
on stock

Δ 4周
4 weeks

产品型号 Part number	Ds	w	s	r	t_{max}	Z	HIS		AS45
632.0010.20	31.7	2	6.1	1	8.3	6	332143R		▲
632.0015.30	31.7	3	6.1	1.5	8.3	6	332143R		▲
632.0020.40	31.7	4	6.1	2	8.3	6	332143R		▲
								P	●
								M	●
								K	●
								N	o
								S	●
								H	-

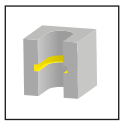

z6

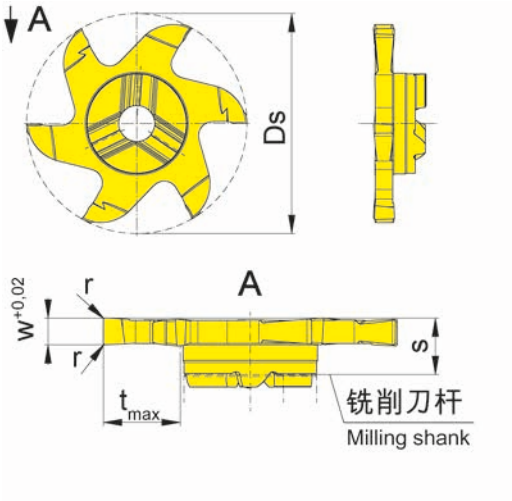

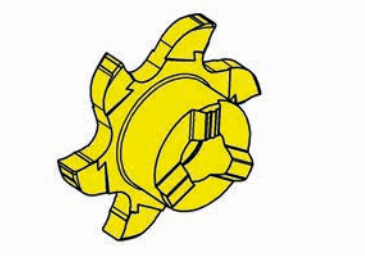

图示=右手型
Picture = right hand cutting version

硬质合金牌号
Carbide grades

▲ 库存
on stock

Δ 4周
4 weeks

产品型号 Part number	Ds	w	s	r	t_{max}	Z	HIS		AS45	TA45
632.0200.00	31.7	2	6.1	0.2	8.3	6	332143R		▲	▲
632.0250.00	31.7	2.5	6.1	0.2	8.3	6	332143R		▲	▲
632.0300.00	31.7	3	6.1	0.2	8.3	6	332143R		▲	▲
632.0400.00	31.7	4	6.1	0.2	8.3	6	332143R		▲	▲
								P	●	●
								M	●	●
								K	●	●
								N	o	●
								S	●	●
								H	-	-

z6

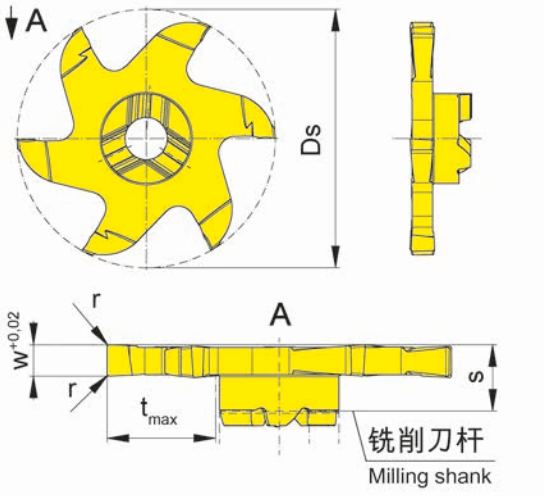

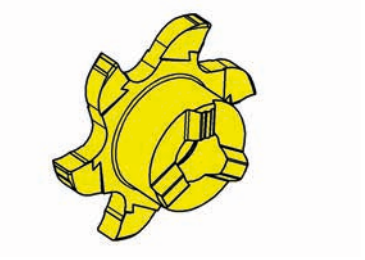

图示=右手型
Picture = right hand cutting version

硬质合金牌号
Carbide grades

▲ 库存
on stock

Δ 4周
4 weeks

产品型号 Part number	Ds	w	s	r	t_{max}	Z	HIS		AS45	TA45
632.0100.2.00	31.7	1	6.1	-	10	6	332110R		▲	
632.0120.2.00	31.7	1.2	6.1	0.1	10	6	332110R		▲	
632.0150.2.00	31.7	1.5	6.1	0.2	10	6	332110R		▲	▲
632.0160.2.00	31.7	1.6	6.1	0.2	10	6	332110R		▲	▲
632.0200.2.00	31.7	2	6.1	0.2	10	6	332110R		▲	▲
632.0250.2.00	31.7	2.5	6.1	0.2	10	6	332110R		▲	▲
632.0300.2.00	31.7	3	6.1	0.2	10	6	332110R		▲	▲
								P	●	●
								M	●	●
								K	●	●
								N	o	●
								S	●	●
								H	-	-

z6

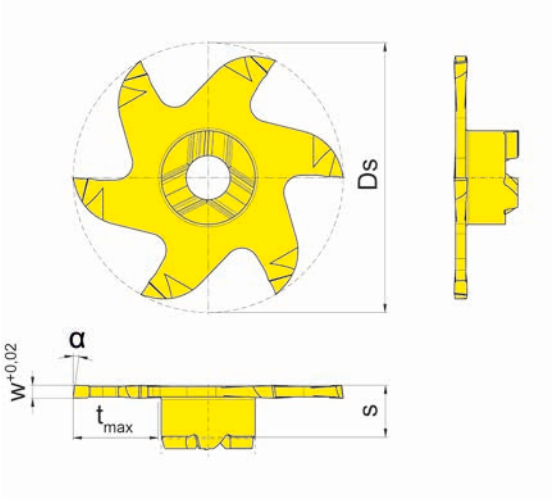

图示=右手型
Picture = right hand cutting version

硬质合金牌号
Carbide grades

▲ 库存
on stock

Δ 4周
4 weeks

产品型号 Part number	Ds	w	s	α	t_{max}	Z	HIS		AN25	RC25
632.L810.2.00	31.7	1	6.1	8°	10	6	332110R		▲	▲
632.L815.2.00	31.7	1.5	6.1	8°	10	6	332110R		▲	▲
632.L820.2.00	31.7	2	6.1	8°	10	6	332110R		▲	▲
								P	●	●
								M	o	●
								K	-	●
								N	-	-
								S	-	-
								H	-	-

z6

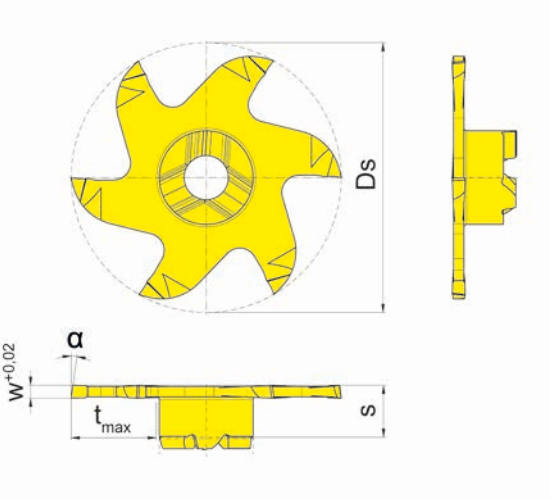

图示=右手型
Picture = right hand cutting version

硬质合金牌号
Carbide grades

▲ 库存
on stock

Δ 4周
4 weeks

产品型号 Part number	Ds	w	s	α	t_{max}	Z	HIS		AN25	RC25
636.L810.2.00	35.7	1	6.1	8°	12	6	332110R		▲	▲
636.L815.2.00	35.7	1.5	6.1	8°	12	6	332110R		▲	▲
636.L820.2.00	35.7	2	6.1	8°	12	6	332110R		▲	▲
								P	●	●
								M	o	●
								K	-	●
								N	-	-
								S	-	-
								H	-	-

2.5mm槽宽以上的刀片是错齿的
from width of groove 2,5 mm toothing with cross-cut

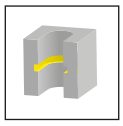

z6

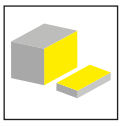

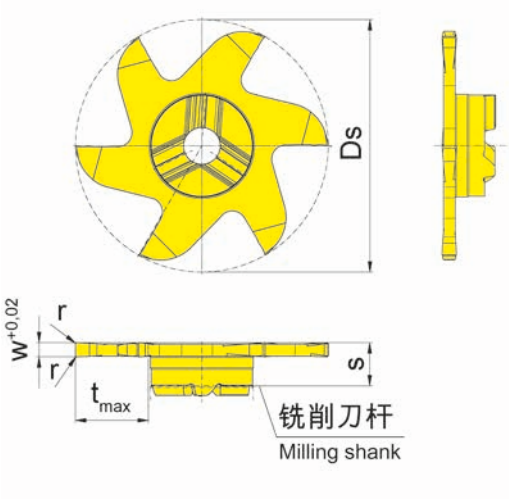

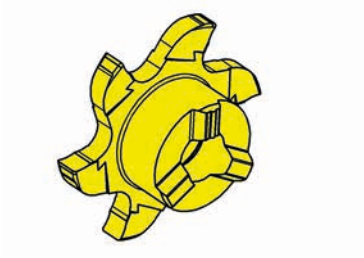

图示=右手型
Picture = right hand cutting version

硬质合金牌号
Carbide grades

▲ 库存
on stock

Δ 4周
4 weeks

产品型号 Part number	Ds	w	s	r	t_{max}	Z	HIS		AS45	TA45
636.0150.00	35.7	1.5	6.1	0.1	10.2	6	332143R		▲	▲
636.0200.00	35.7	2	6.1	0.2	10.2	6	332143R		▲	▲
636.0250.00	35.7	2.5	6.1	0.2	10.2	6	332143R		▲	▲
636.0300.00	35.7	3	6.1	0.2	10.2	6	332143R		▲	▲
								P	●	●
								M	●	●
								K	●	●
								N	o	●
								S	●	●
								H	-	-

请考虑刀杆定位面直径Ø d_1
Please consider pocket seat Ø d1 of the miling shank!

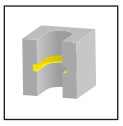

z6

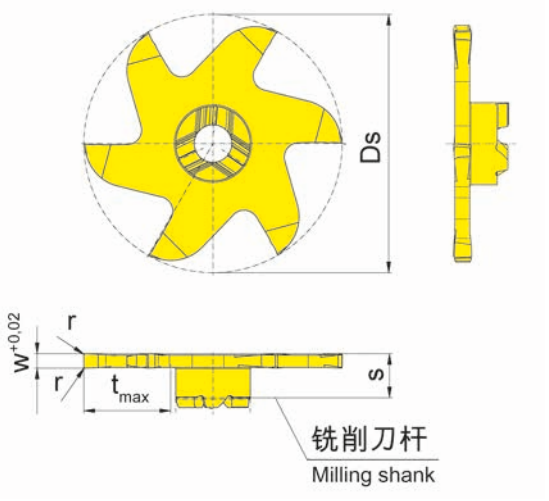

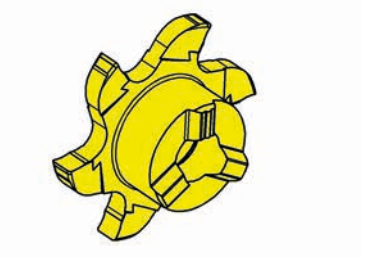

图示=右手型
Picture = right hand cutting version

硬质合金牌号
Carbide grades

▲ 库存
on stock

Δ 4周
4 weeks

产品型号 Part number	Ds	w	s	r	t_{max}	Z	HIS		AS45	TA45
636.0110.2.00	35.7	1.1	6.1	0.1	12	6	332110R		▲	
636.0130.2.00	35.7	1.3	6.1	0.1	12	6	332110R		▲	
636.0150.2.00	35.7	1.5	6.1	0.1	12	6	332110R		▲	▲
636.0200.2.00	35.7	2	6.1	0.2	12	6	332110R		▲	▲
636.0250.2.00	35.7	2.5	6.1	0.2	12	6	332110R		▲	▲
								P	●	●
								M	●	●
								K	●	●
								N	o	●
								S	●	●
								H	-	-

2.5mm槽宽以上的刀片是错齿的
from width of groove 2,5 mm toothing with cross-cut

请考虑刀杆定位面直径Ø d_1
Please consider pocket seat Ø d1 of the miling shank!

z9

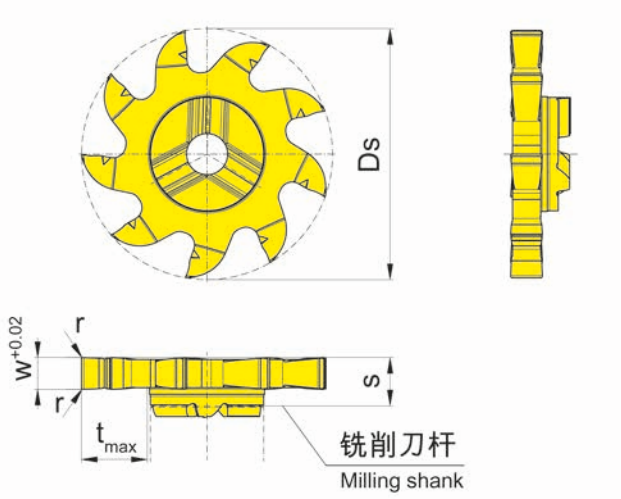

图示=右手型
Picture = right hand cutting version

硬质合金牌号
Carbide grades

▲ 库存
on stock

Δ 4周
4 weeks

产品型号 Part number	Ds	w	s	r	t_{max}	Z	HIS		AS45
932.0200.00	31.7	2	6.1	0.2	8.3	9	332143R		▲
932.0250.00	31.7	2.5	6.1	0.2	8.3	9	332143R		▲
932.0300.00	31.7	3	6.1	0.2	8.3	9	332143R		▲
932.0400.00	31.7	4	6.1	0.2	8.3	9	332143R		▲
								P	●
								M	●
								K	●
								N	o
								S	●
								H	-

z9

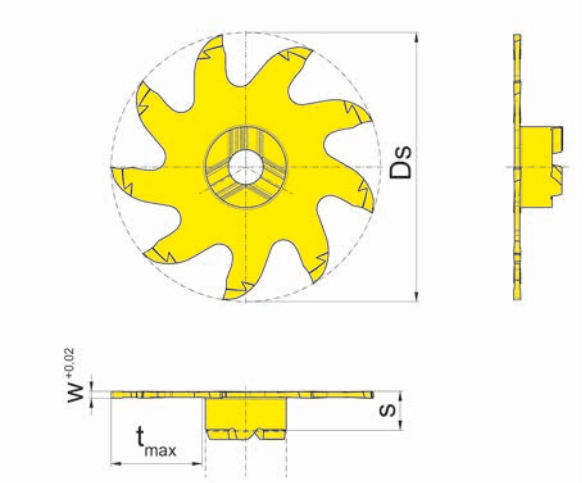

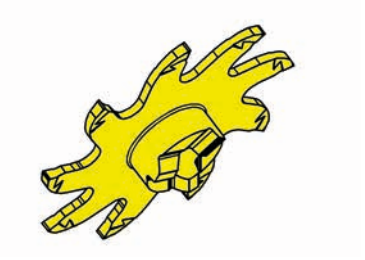

图示=右手型
Picture = right hand cutting version

硬质合金牌号
Carbide grades

▲ 库存
on stock

Δ 4周
4 weeks

产品型号 Part number	Ds	w	s	t_{max}	Z	HIS		AN25	RC25
939.0100.3.00	40	1	5.8	13.5	9	332120R		▲	▲
939.0150.3.00	40	1.5	5.8	13.5	9	332120R		▲	▲
939.0200.3.00	40	2	5.8	13.5	9	332120R		▲	▲
939.0250.3.00	40	2.5	5.8	13.5	9	332120R		▲	▲
							P	●	●
							M	o	●
							K	-	●
							N	-	-
							S	-	-
							H	-	-

z9

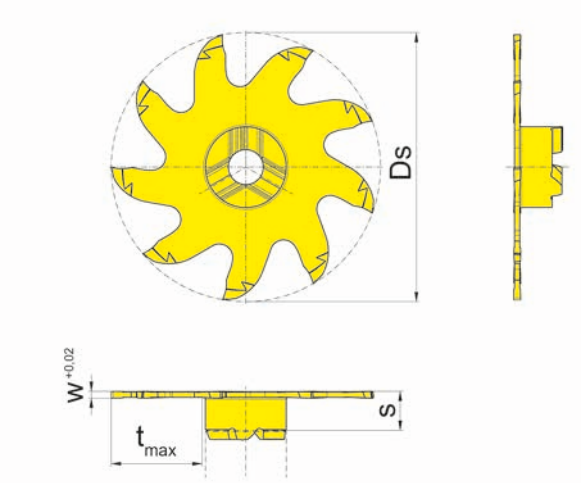

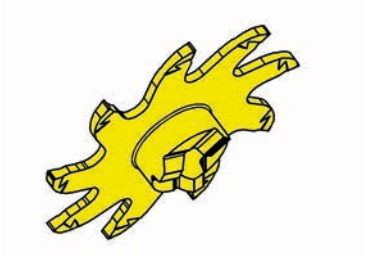

图示=右手型
Picture = right hand cutting version

硬质合金牌号
Carbide grades

▲ 库存
on stock

Δ 4周
4 weeks

产品型号 Part number	Ds	w	s	t_{max}	Z	HIS		AN25	RC25
939.0040.4.00	40	0.4	5.8	14	9	332110R		▲	▲
939.0050.4.00	40	0.5	5.8	14	9	332110R		▲	▲
939.0060.4.00	40	0.6	5.8	14	9	332110R		▲	▲
939.0070.4.00	40	0.7	5.8	14	9	332110R		▲	▲
939.0080.4.00	40	0.8	5.8	14	9	332110R		▲	▲
939.0090.4.00	40	0.9	5.8	14	9	332110R		▲	▲
939.0100.4.00	40	1	5.8	14	9	332110R		▲	▲
939.0150.4.00	40	1.5	5.8	14	9	332110R		▲	▲
							P	●	●
							M	o	●
							K	-	●
							N	-	-
							S	-	-
							H	-	-

z9

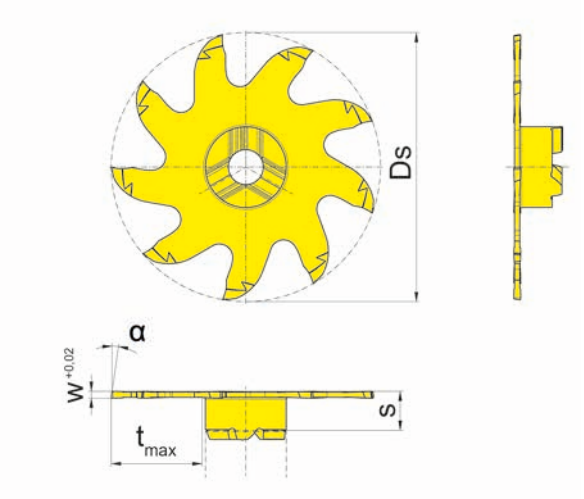

图示=右手型
Picture = right hand cutting version

硬质合金牌号
Carbide grades

▲ 库存
on stock

Δ 4周
4 weeks

产品型号 Part number	Ds	w	s	α	t_{max}	Z	HIS		AN25	RC25
939.L810.3.00	40	1	5.8	8°	13.5	9	332120R		▲	▲
939.L810.4.00	40	1	5.8	8°	14	9	332110R		▲	Δ
939.L815.4.00	40	1.5	5.8	8°	14	9	332110R		▲	Δ
								P	●	●
								M	o	●
								K	-	●
								N	-	-
								S	-	-
								H	-	-

铣刀杆
Milling shank
M335

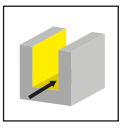

页/Page
202

刀片
Insert
335

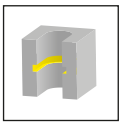

页/Page
203

M335

铣刀杆

带可转位刀片

孔径自Ø 35 mm

Milling shank with exchangeable insert

from bore Ø 35 mm

铣刀杆
Milling shank

M335

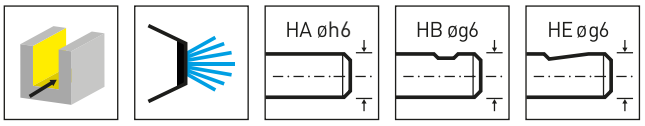

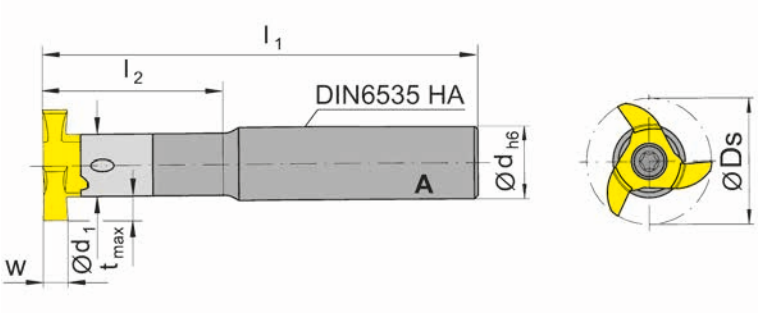

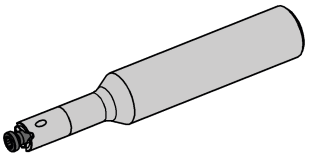

图示=右手型
Picture = right hand cutting version

产品型号 Part number	d	l_1	l_2	d_1	形式 Form	HWS
M335.0020.01A	20	100	40	17.5	A	335175R
M335.0020.02A	20	130	60	17.5	A	335175R
M335.0020.03A	20	150	80	17.5	A	335175R
M335.0020.01B	20	100	40	17.5	B	335175R
M335.0020.02B	20	130	60	17.5	B	335175R
M335.0020.02E	20	130	60	17.5	E	335175R

w,Ds,tmax见刀片
w, Ds, tmax see inserts

配件
Spare Parts

铣刀杆 Milling shank	锁紧螺钉 Clamping Screw	TORX PLUS®扳手 TORX PLUS® Wrench
M335...	**6.17T25P**	**T25PQ**

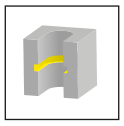

z3

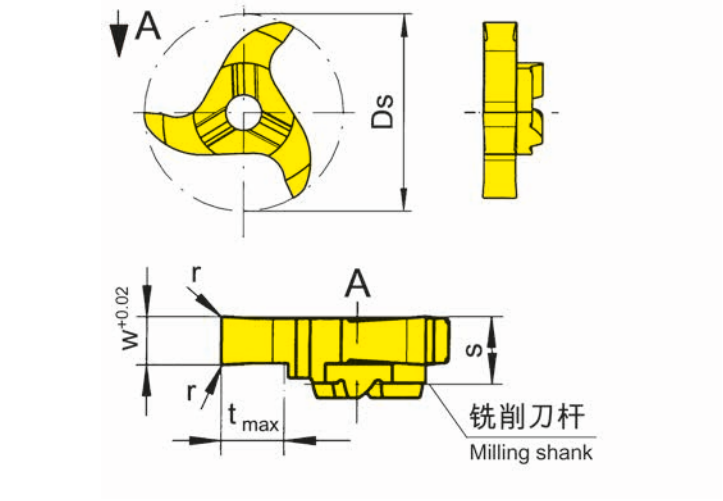

图示=右手型
Picture = right hand cutting version

硬质合金牌号
Carbide grades

▲ 库存
on stock

Δ 4周
4 weeks

产品型号 Part number	Ds	w	s	r	t_{max}	Z	HIS		AS45	TI25
335.0200.00	34.7	2	8.7	0.2	8	3	335175R		▲	▲
335.0300.00	34.7	3	8.7	0.2	8	3	335175R		▲	▲
335.0400.00	34.7	4	8.7	0.2	8	3	335175R		▲	▲
335.0500.00	34.7	5	8.7	0.2	8	3	335175R		▲	▲
335.0600.00	34.7	6	8.7	0.2	8	3	335175R		▲	▲
								P	●	●
								M	●	●
								K	●	●
								N	o	●
								S	●	●
								H	-	-

根据要求:
8.0-15.0mm宽度刀片仅用于特殊轮廓刀片，而且要取决于被加工工件的材质。
Upon request:
Insert widths of 8,0 - 15,0 mm are only available as special profiled inserts.Use of these widths depend from the workpiece material to be machined.

B

铣刀杆
Milling shank
M620

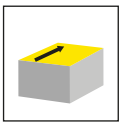

页/Page
206

刀片
Insert
620

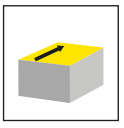

页/Page
207-208

M620

铣刀杆

带可转位刀片

切削刃Ø 21.7 mm

Milling shank with exchangeable insert

Cutting edge Ø 21,7 mm

铣刀杆
Milling shank

M620

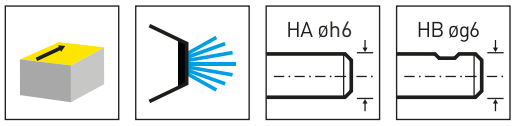

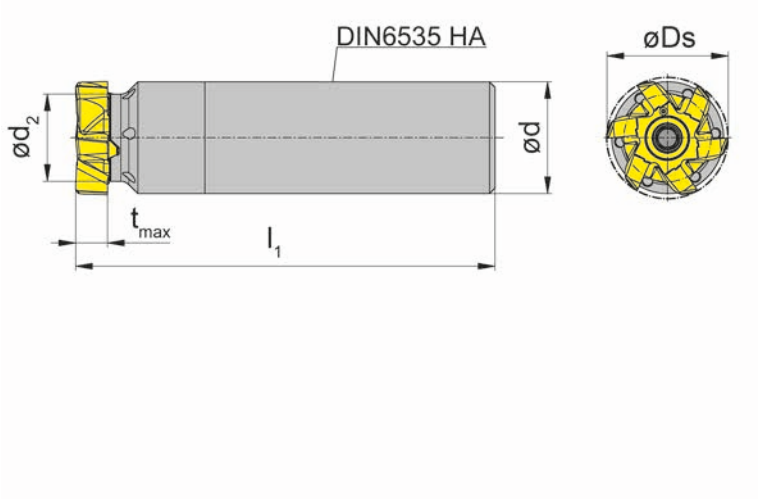

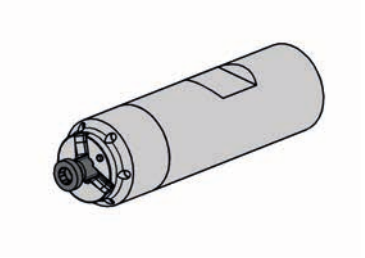

产品型号 Part number	Ds	d	l_1	d_2	形式 Form	HWS
M620.0020.D.00A	21.7	20	75	15.6	A	620156R
M620.0020.D.00B	21.7	20	75	15.6	B	620156R
M620.0020.D.04A	21.7	20	130	15.6	A	620156R
M620.0020.D.04B	21.7	20	130	15.6	B	620156R

tmax见刀片
tmax see inserts

配件
Spare Parts

铣刀杆 Milling shank	锁紧螺钉 Clamping Screw	TORX PLUS®扳手 TORX PLUS® Wrench
M620...	**5.14T20P**	**T20PQ**

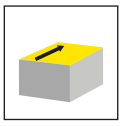

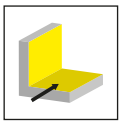

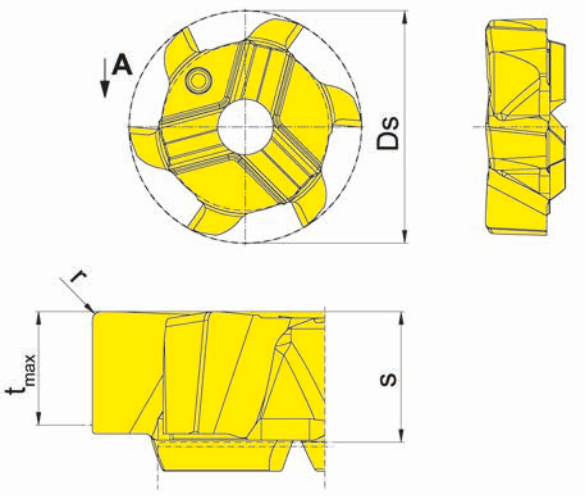

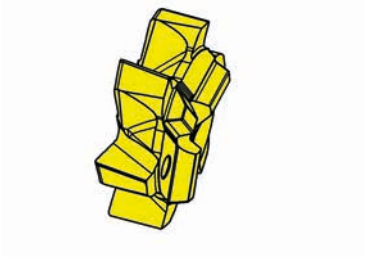

硬质合金牌号
Carbide grades

▲ 库存
on stock

Δ 4周
4 weeks

产品型号 Part number	Ds	Z	r	t_{max}	s	HIS		AS45
620.PL53.64	21.7	6	0.4	5.3	6.1	620156R		▲
							P	●
							M	●
							K	●
							N	o
							S	●
							H	-

z6

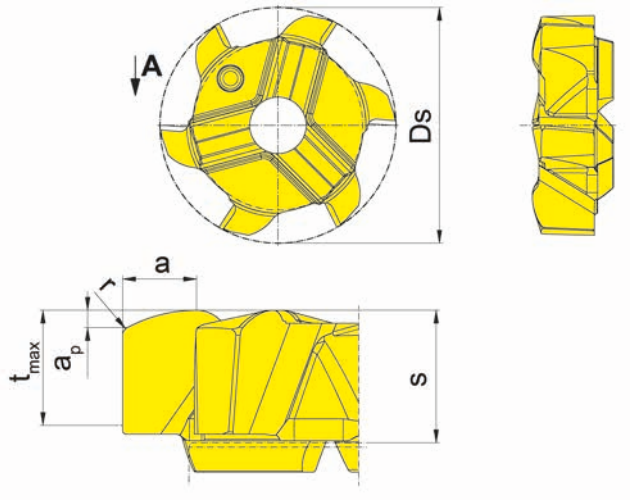

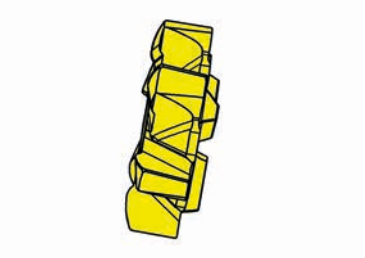

硬质合金牌号
Carbide grades

▲ 库存
on stock

Δ 4周
4 weeks

产品型号 Part number	Ds	a	Z	r	t_{max}	a_p	s	HIS		AS45
620.HV08.04	21.7	4.4	6	0.4	5.3	0.8	6.1	620156R		▲
									P	●
									M	●
									K	●
									N	o
									S	●
									H	-

高进给铣削
High Feed Milling

切入角 Diving angle	理论圆角半径r_{th}=编程半径 theoretical corner radius r_{th}= programming radius	最大偏差 max. difference
1°	1,15 mm	0,43 mm

C

M275

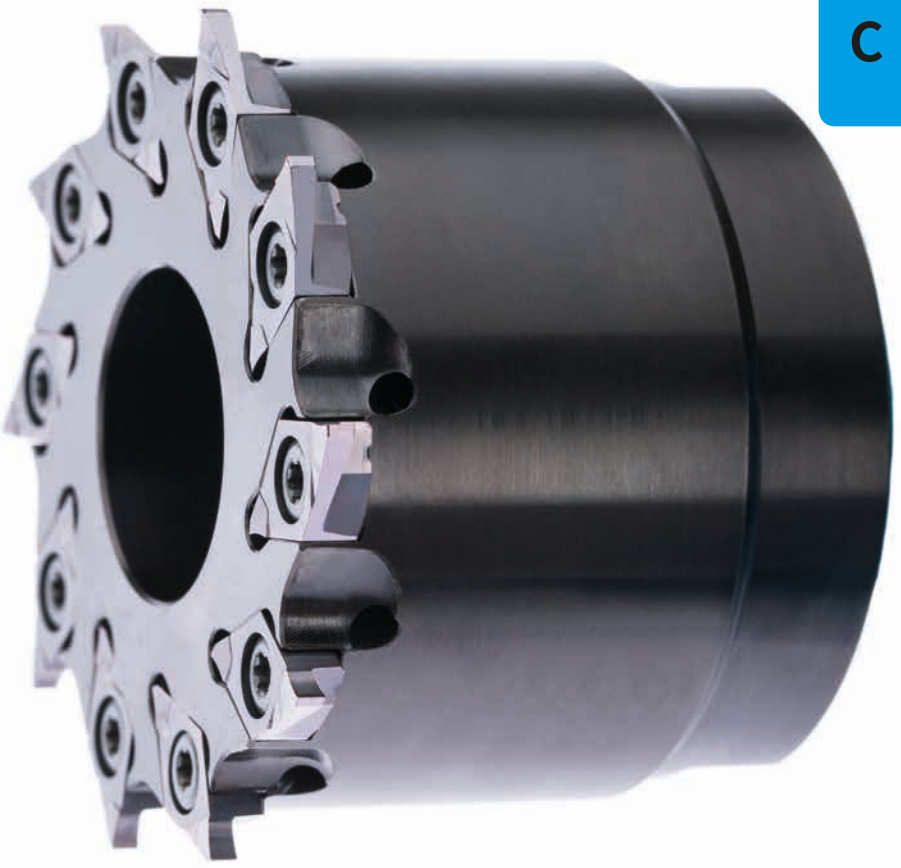

槽铣刀

切削刃自 Ø 31 mm

Groove milling cutter

from cutting edge Ø 31 mm

槽铣削(圆弧插补铣削)
Groove Milling by circular interpolation

杆式铣刀
End Mill
M275

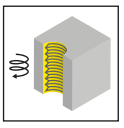

页/Page
211

螺纹锁紧铣刀
Screw-in cutter
M275

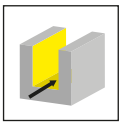

页/Page
212

芯轴刀柄式铣刀
Arbour Mounted Cutter
M275

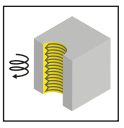

页/Page
213

盘铣刀
Disc Milling Cutter
M275

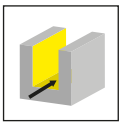

页/Page
214

可转位刀片
Indexable insert
S275/RS275

页/Page
215-216

页/Page
217

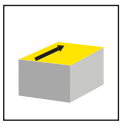

页/Page
218

杆式铣刀
End Mill

M275

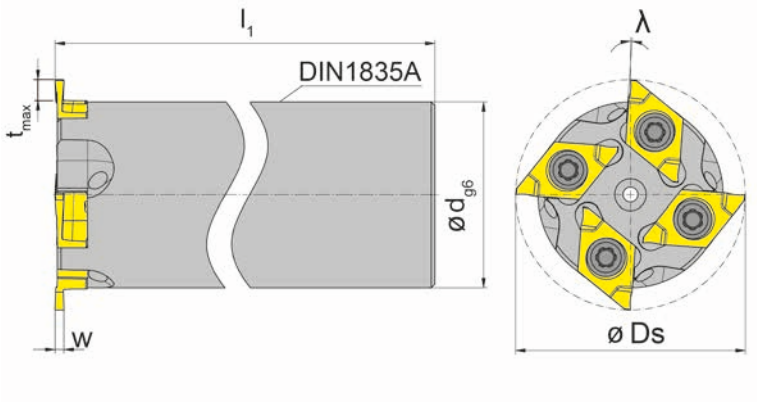

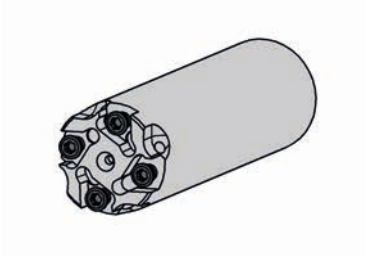

图示=右手型
Picture = right hand cutting version

产品型号 Part number	Ds	d	l_1	λ	HWS
M275.031.D25.3.04A	31	25	125	4°	275041R

w和tmax见刀片
w and tmax see inserts

刀杆材料：钢（不推荐使用热缩方式夹持）
Material of shank: Steel (not recommended for shrink fitting)

配件
Spare Parts

杆式铣刀 End Mill	锁紧螺钉 Clamping Screw	TORX PLUS®扳手 TORX PLUS® Wrench
M275.031.D25.3.04A	**3.5.10T10P**	**T10PL**

螺纹锁紧铣刀
Screw-in cutter

M275

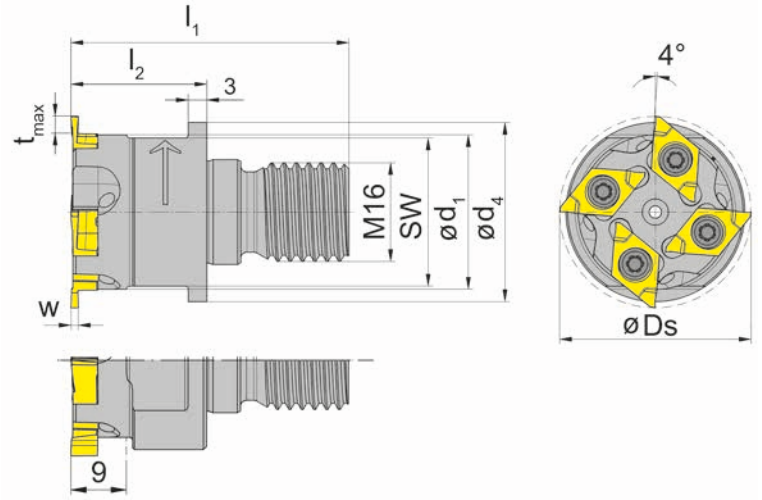

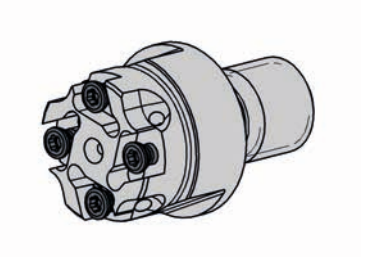

图示=右手型
Picture = right hand cutting version

产品型号 Part number	Z	Ds	l_1	l_2	d_1	d_4	SW	HWS
M275.031.M16.1.04	4	31	45	22	25	29	24	275041R
M275.036.M16.1.04	4	36	45	22	30	29	27	275041R

w和tmax见刀片
w and tmax see inserts

配件
Spare Parts

螺纹锁紧铣刀 Screw-in cutter	锁紧螺钉 Clamping Screw	TORX PLUS®扳手 TORX PLUS® Wrench
M275...	**3.5.10T10P**	**T10PL**

芯轴刀柄式铣刀
Arbour Mounted Cutter

M275

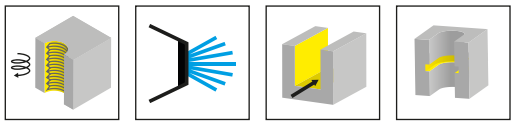

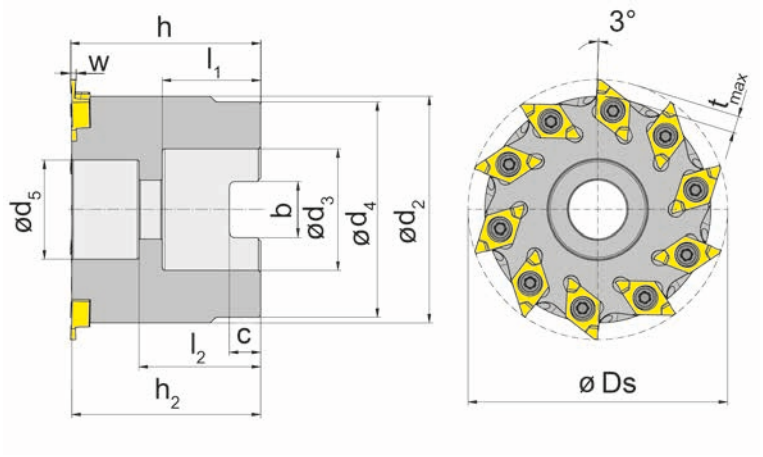

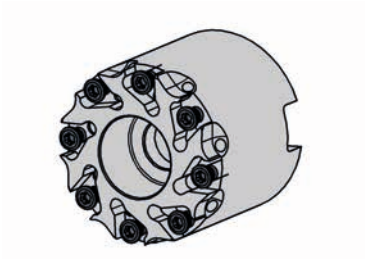

图示=右手型
Picture = right hand cutting version

产品型号 Part number	Z	Ds	h_2	h	d_5	d_4	d_3	l_1	l_2	b	C	d_2	HWS
M275.0038.A16.05	5	38	32.7	33	13.5	32	16	18	22.7	8.4	5.6	32	275041R
M275.0048.A22.08	8	48	36.7	37	18.5	40.5	22	20	24.7	10.4	6.3	40.5	275041R
M275.0058.A27.10	10	58	42.2	42.5	22	48	27	22	27.2	12.4	7	50	275041R
M275.0078.A32.14	14	78	49.7	50	33	58	32	25	36.7	14.4	8	70.5	275041R

w和tmax见刀片
w and tmax see inserts

中心孔和键槽均依据DIN138标准
Cutterhole and cross keyway as per DIN 138

配件
Spare Parts

芯轴刀柄式铣刀 Arbour Mounted Cutter	锁紧螺钉 Clamping Screw	TORX PLUS®扳手 TORX PLUS® Wrench
M275...	**3.5.10T10P**	**T10PL**

盘铣刀
Disc Milling Cutter

M275

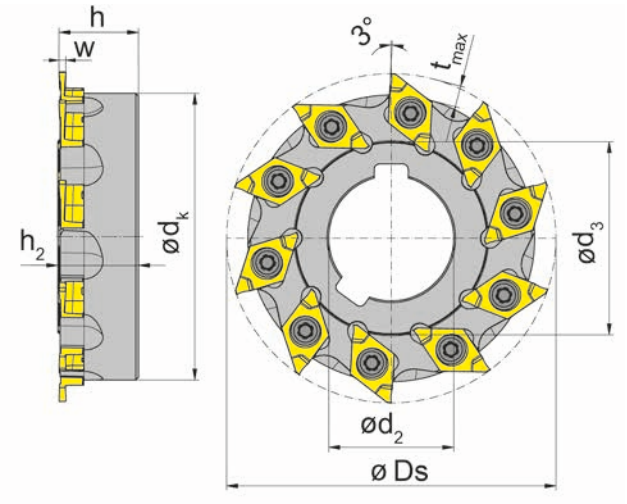

R=右手型-如图
R = right hand cutting version shown

L=左手型
L = left hand cutting version

产品型号 Part number	Z	Ds	d_2	d_3	d_K	h_2	h	HWS
RM275.0058.S22.10	10	58	22	34	50.5	14.2	14	275041R
RM275.0098.S32.16	16	98	32	48	90.5	20.2	20	275041R
LM275.0058.S22.10	10	58	22	34	50.5	14.2	14	275041L
LM275.0078.S27.14	14	78	27	43	70.5	16.2	16	275041L
LM275.0098.S32.16	16	98	32	48	90.5	20.2	20	275041L

w和tmax见刀片
w and tmax see inserts

孔(d2)带纵向DIN138标准键槽
Bore (d2) with longitudinal keyway to DIN 138

配件
Spare Parts

盘铣刀 Disc Milling Cutter	锁紧螺钉 Clamping Screw	TORX PLUS®扳手 TORX PLUS® Wrench
R/LM275.0...	**3.5.10T10P**	**T10PL**
LM275.0078.S27.14	**3.5.10T10P**	**T10PL**

可转位刀片
Indexable insert

S275

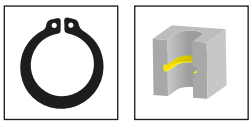

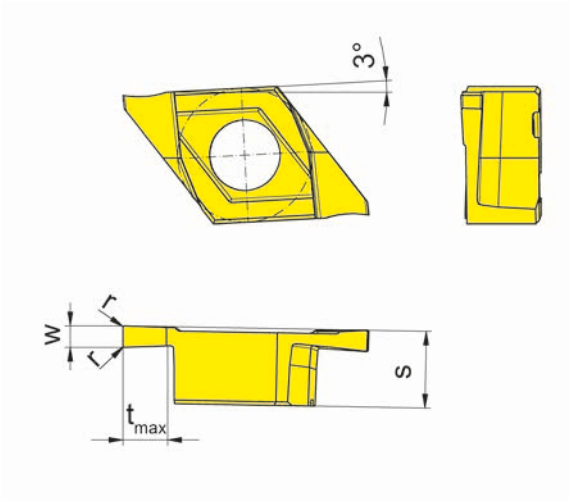

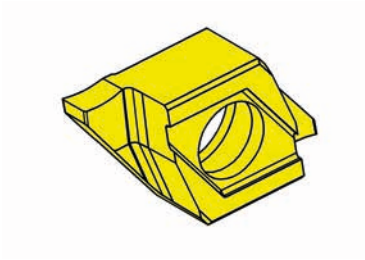

R=右手型-如图
R = right hand version shown

L=左手型
L = left hand version

硬质合金牌号
Carbide grades

▲ 库存
on stock

Δ 4周
4 weeks

产品型号 Part number	Nw	w	s	r	t_{max}	HIS		AS45
RS275.0110.00	1.1	1.2	4.3	0.1	2.5	275043R		Δ
RS275.0130.00	1.3	1.4	4.3	0.1	2.5	275043R		▲
RS275.0160.00	1.6	1.7	4.3	0.1	2.5	275043R		▲
RS275.0185.00	1.85	1.95	4.3	0.15	2.5	275043R		▲
RS275.0215.00	2.15	2.25	4.3	0.15	2.5	275043R		▲
RS275.0265.00	2.65	2.75	4.3	0.15	2.5	275043R		▲
RS275.0315.00	3.15	3.25	4.3	0.15	2.5	275043R		▲
LS275.0130.00	1.3	1.4	4.3	0.1	2.5	275043L		Δ
LS275.0160.00	1.6	1.7	4.3	0.1	2.5	275043L		Δ
LS275.0265.00	2.65	2.75	4.3	0.15	2.5	275043L		▲
LS275.0315.00	3.15	3.25	4.3	0.15	2.5	275043L		Δ
							P	●
							M	●
							K	●
							N	o
							S	●
							H	-

可转位刀片
Indexable insert

S275

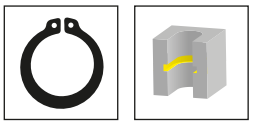

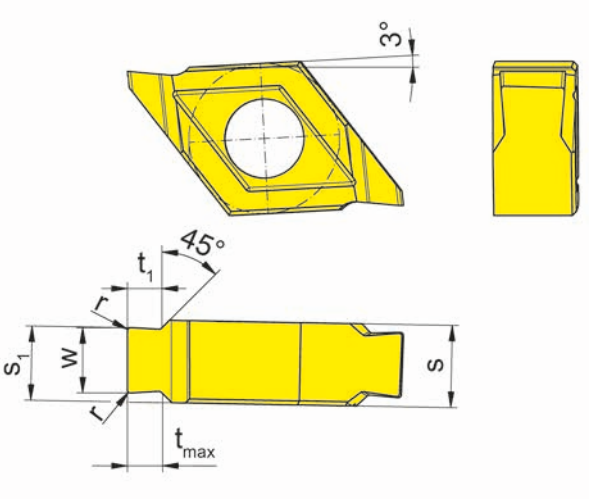

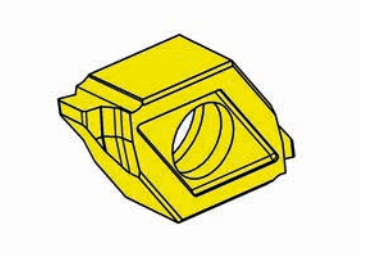

R=右手型-如图
R = right hand version shown

L=左手型
L = left hand version

硬质合金牌号
Carbide grades

▲ 库存
on stock

Δ 4周
4 weeks

产品型号 Part number	Nw	w	t_1	s	s_1	r	t_{max}	HIS		AS45
RS275.1610.41	1.6	1.7	0.95	4.1	3.17	0.1	1	275041R		▲
RS275.1812.41	1.85	1.95	1.21	4.1	3.29	0.15	1.25	275041R		▲
RS275.2115.41	2.15	2.25	1.45	4.1	3.44	0.15	1.5	275041R		▲
RS275.2617.41	2.65	2.75	1.7	4.1	3.39	0.15	1.75	275041R		▲
RS275.3118.41	3.15	3.25	1.7	4.1	3.7	0.15	1.75	275041R		▲
LS275.3118.41	3.15	3.25	1.7	4.1	3.7	0.15	1.75	275041L		Δ
									P	●
									M	●
									K	●
									N	o
									S	●
									H	-

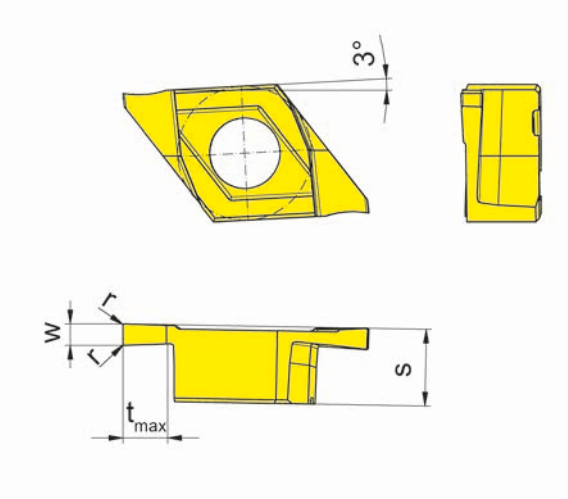

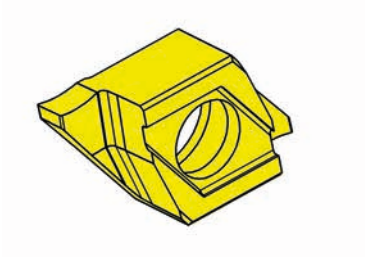

R=右手型-如图
R = right hand version shown

L=左手型
L = left hand version

硬质合金牌号
Carbide grades

▲ 库存
on stock

Δ 4周
4 weeks

产品型号 Part number	Nw	w	s	r	t_{max}	HIS		TA45
RS275.0110.40	1.1	1.2	4.3	0.1	2.5	275043R		Δ
RS275.0130.40	1.3	1.4	4.3	0.1	2.5	275043R		▲
RS275.0185.40	1.85	1.95	4.3	0.15	2.5	275043R		▲
RS275.0215.40	2.15	2.25	4.3	0.15	2.5	275043R		Δ
RS275.0265.40	2.65	2.75	4.3	0.15	2.5	275043R		Δ
RS275.0315.40	3.15	3.25	4.3	0.15	2.5	275043R		Δ
LS275.0110.40	1.1	1.2	4.3	0.1	2.5	275043L		Δ
LS275.0160.40	1.6	1.7	4.3	0.1	2.5	275043L		Δ
LS275.0185.40	1.85	1.95	4.3	0.15	2.5	275043L		Δ
LS275.0215.40	2.15	2.25	4.3	0.15	2.5	275043L		Δ
LS275.0265.40	2.65	2.75	4.3	0.15	2.5	275043L		Δ
LS275.0315.40	3.15	3.25	4.3	0.15	2.5	275043L		Δ
							P	-
							M	-
							K	-
							N	●
							S	-
							H	-

可转位刀片
Indexable insert

RS275

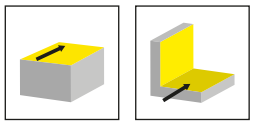

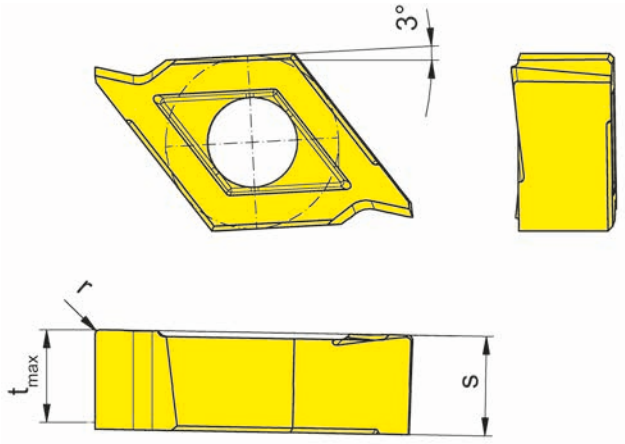

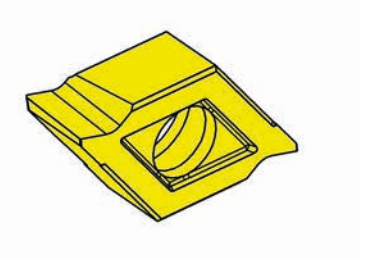

R=右手型-如图
R = right hand version shown

硬质合金牌号
Carbide grades

▲ 库存
on stock

Δ 4周
4 weeks

产品型号 Part number	r	t_{max}	s	HIS		AS45	TA45
RS275.PL40.62	0.15	4	4.3	275043R			▲
RS275.PL43.52	0.2	4	4.3	275043R		▲	
					P	●	●
					M	●	●
					K	●	●
					N	o	●
					S	●	●
					H	-	-

M380/M381

D

杆式铣刀
芯轴刀柄式铣刀
整体式铣刀
盘铣刀

孔径自Ø 45 mm

End Mill
Arbour Mounted Cutter
Mono Milling Cutter
Disc Milling Cutter

from bore Ø 45 mm

D

杆式铣刀
End Mill
380

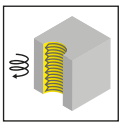

页/Page
221

芯轴刀柄式铣刀
Arbour Mounted Cutter
380/380...IK

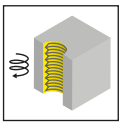

页/Page
222

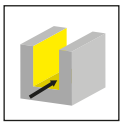

页/Page
223-225

整体式铣刀
Mono Milling Cutter
HSK380/ABS..380

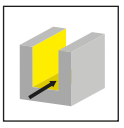

页/Page
226-227

盘铣刀
Disc Milling Cutter
381

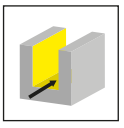

页/Page
228

可转位刀片
Indexable insert
314

页/Page
229-230

页/Page
231

杆式铣刀
End Mill

380

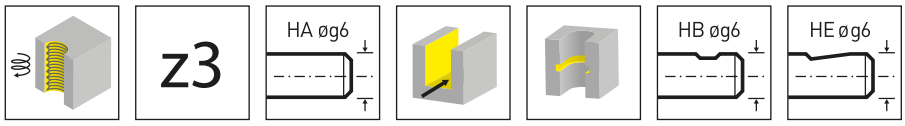

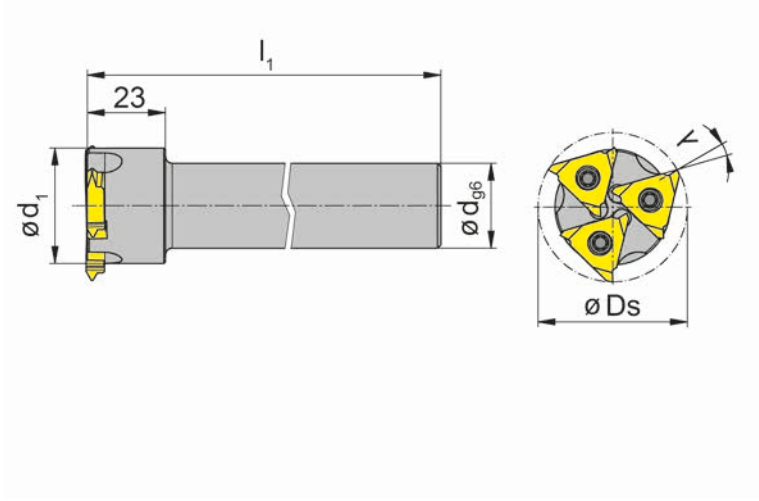

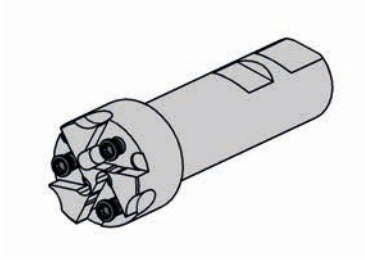

图示=右手型
Picture = right hand cutting version

产品型号 Part number	Ds	d	l_1	d_1	λ	形式 Form	HWS
380.0044.03A	44	25	125	34	14°	A	314027R • 314041R • 314052R
380.0044.03B	44	25	125	34	14°	B	314027R • 314041R • 314052R
380.0044.03E	44	25	125	34	14°	E	314027R • 314041R • 314052R

tmax见刀片
tmax see inserts

配件
Spare Parts

杆式铣刀 End Mill	锁紧螺钉 Clamping Screw	TORX PLUS®扳手 TORX PLUS® Wrench
380...	**5.12T20P**	**T20PQ**

D

芯轴刀柄式铣刀
Arbour Mounted Cutter

380

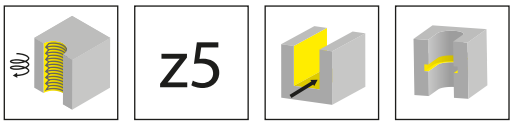

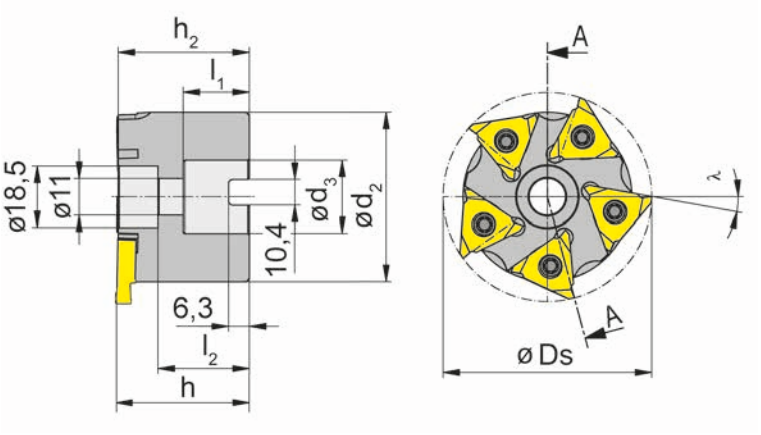

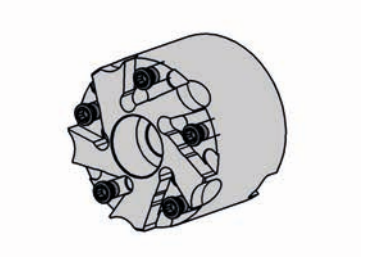

图示=右手型
Picture = right hand cutting version

产品型号 Part number	Ds	h_2	h	d_3	l_1	l_2	λ	d_2	HWS
380.0063.05	63	39.6	40	22	20	27.6	10°	51	314027R • 314041R • 314052R

中心孔和键槽均依据DIN138标准
Cutterhole and cross keyway as per DIN 138

tmax见刀片
tmax see inserts

配件
Spare Parts

芯轴刀柄式铣刀 Arbour Mounted Cutter	**锁紧螺钉** Clamping Screw	**TORX PLUS®扳手** TORX PLUS® Wrench
380.0063.05	**5.12T20P**	**T20PQ**

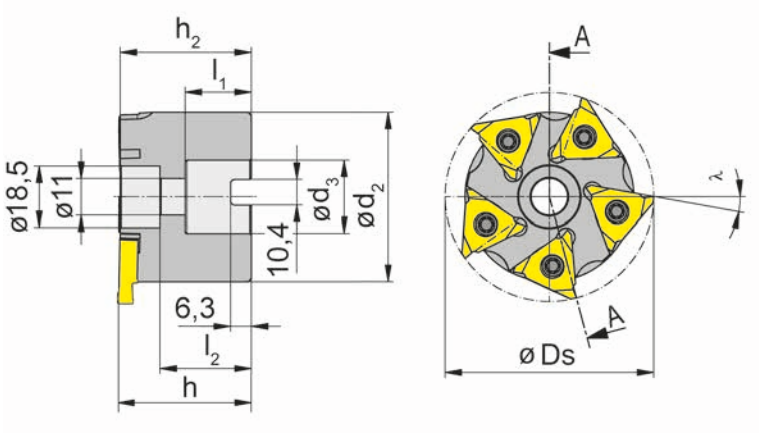

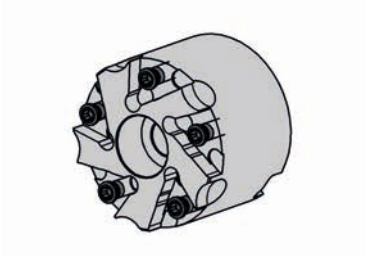

图示=右手型
Picture = right hand cutting version

产品型号 Part number	Z	Ds	h_2	h	d_3	l_1	l_2	λ	d_2	HWS
380.0063.05IK	5	63	39.6	40	22	20	27.6	10°	51	314027R • 314041R • 314052R

中心孔和键槽均依据DIN138标准
Cutterhole and cross keyway as per DIN 138

tmax见刀片
tmax see inserts

铣刀不包含铣刀柄-需单独订购！
Milling arbor is not combined with milling cutter - seperate order required!

配件
Spare Parts

芯轴刀柄式铣刀 Arbour Mounted Cutter	锁紧螺钉 Clamping Screw	TORX PLUS®扳手 TORX PLUS® Wrench
380.0063.05IK	**5.12T20P**	**T20PQ**

芯轴刀柄式铣刀
Arbour Mounted Cutter

380

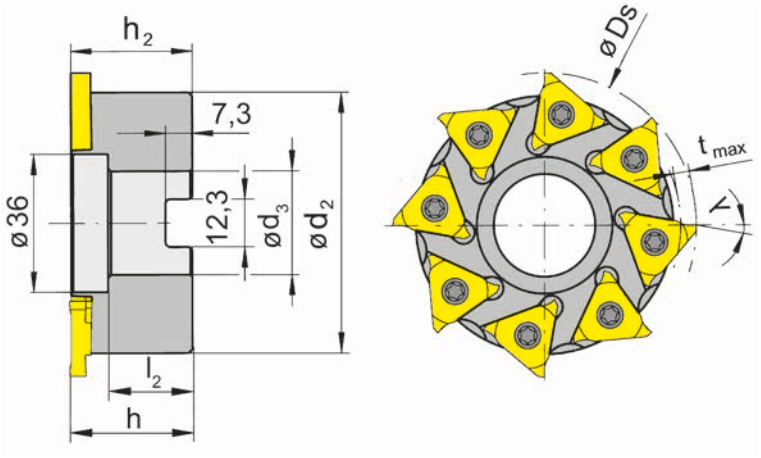

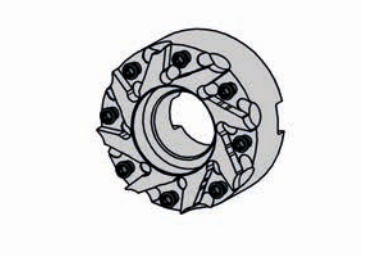

图示=右手型
Picture = right hand cutting version

产品型号 Part number	Z	Ds	t_{max}	h_2	h	d_3	l_2	λ	d_2	HWS
380.0080.08	8	80	5	31.6	32	27	21.6	10°	68	314027R • 314041R • 314052R

中心孔和键槽均依据DIN138标准
Cutterhole and cross keyway as per DIN 138

螺钉**030.0012.0726**不包含在铣刀中-需单独订购！
Bolt screw 030.0012.0726 is combined with the milling cutter.

配件
Spare Parts

芯轴刀柄式铣刀 Arbour Mounted Cutter	**锁紧螺钉** Clamping Screw	**TORX PLUS®扳手** TORX PLUS® Wrench
380.0080.08	**5.12T20P**	**T20PQ**

芯轴刀柄式铣刀
Arbour Mounted Cutter

380...IK

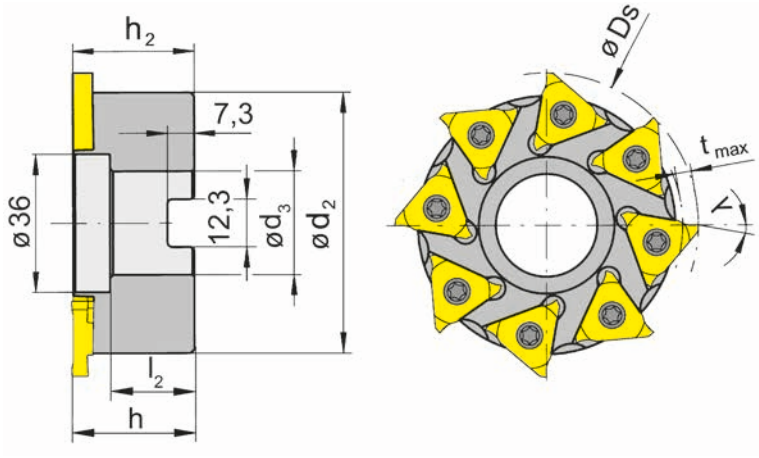

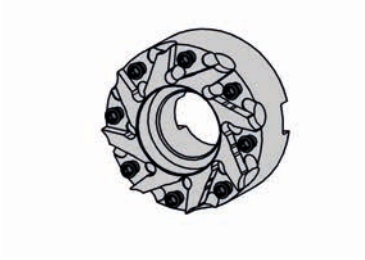

图示=右手型
Picture = right hand cutting version

产品型号 Part number	Z	Ds	t_{max}	h_2	h	d_3	l_2	λ	d_2	HWS
380.0080.08IK	8	80	5	39.8	40	27	21.6	10°	68	314027R • 314041R • 314052R

中心孔和键槽均依据DIN138标准
Cutterhole and cross keyway as per DIN 138

螺钉**030.0012.0726**不包含在铣刀中-需单独订购！
Bolt screw 030.0012.0726 is combined with the milling cutter.

配件
Spare Parts

芯轴刀柄式铣刀 Arbour Mounted Cutter	**锁紧螺钉** Clamping Screw	**TORX PLUS®扳手** TORX PLUS® Wrench
380.0080.08IK	**5.12T20P**	**T20PQ**

D

HSK380

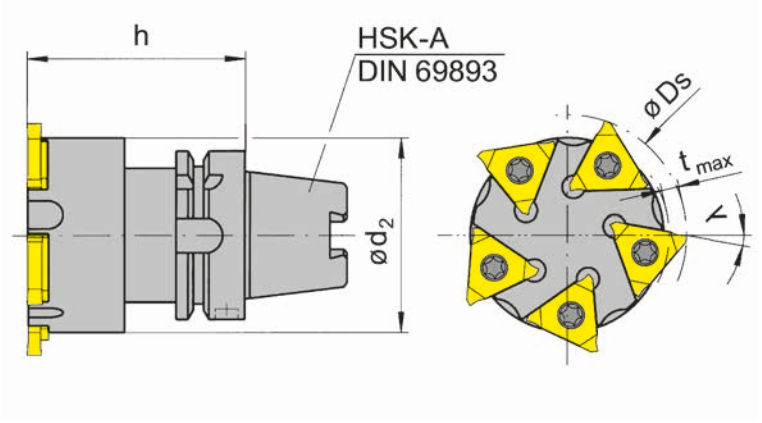

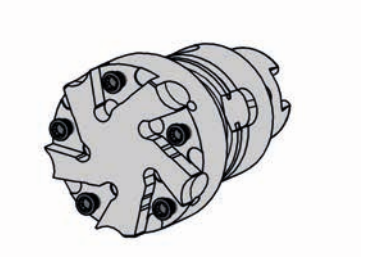

图示=右手型
Picture = right hand cutting version

产品型号 Part number	Ds	Z	t_{max}	h	d_2	λ	HWS
HSK32-380.0044.03	44	3	3	55	34	14°	314027R • 314041R • 314052R
HSK40-380.0050.04	50	4	4	55	40	14°	314027R • 314041R • 314052R
HSK40-380.0063.05	63	5	5	55	51	10°	314027R • 314041R • 314052R
HSK50-380.0063.05	63	5	5	65	51	10°	314027R • 314041R • 314052R
HSK50-380.0080.08	80	8	8	65	68	10°	314027R • 314041R • 314052R
HSK63-380.0080.08	80	8	8	70	68	10°	314027R • 314041R • 314052R

配件
Spare Parts

整体式铣刀 Mono Milling Cutter	锁紧螺钉 Clamping Screw	TORX PLUS®扳手 TORX PLUS® Wrench
HSK32-380...	**5.12T20P**	**T20PQ**

ABS..380

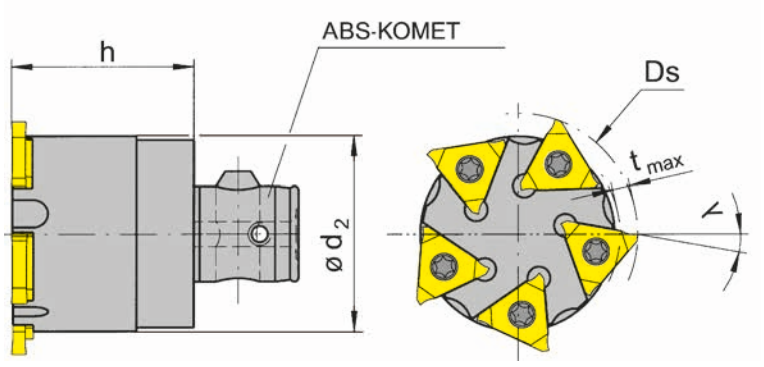

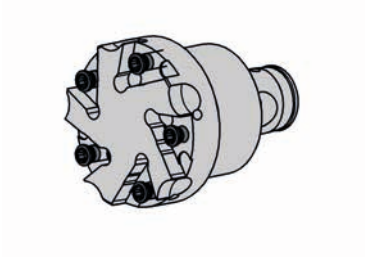

图示=右手型
Picture = right hand cutting version

产品型号 Part number	Ds	Z	λ	HWS
ABS32.380.0044.03	44	3	14°	314027R • 314041R • 314052R
ABS40-380.0050.04	50	4	14°	314027R • 314041R • 314052R
ABS50.380.0063.05	63	5	10°	314027R • 314041R • 314052R
ABS50.380.0080.08	80	8	10°	314027R • 314041R • 314052R
ABS63.380.0080.08	80	8	10°	314027R • 314041R • 314052R

配件
Spare Parts

整体式铣刀 Mono Milling Cutter	锁紧螺钉 Clamping Screw	TORX PLUS®扳手 TORX PLUS® Wrench
ABS32...	**5.12T20P**	**T20PQ**

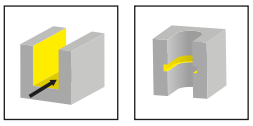

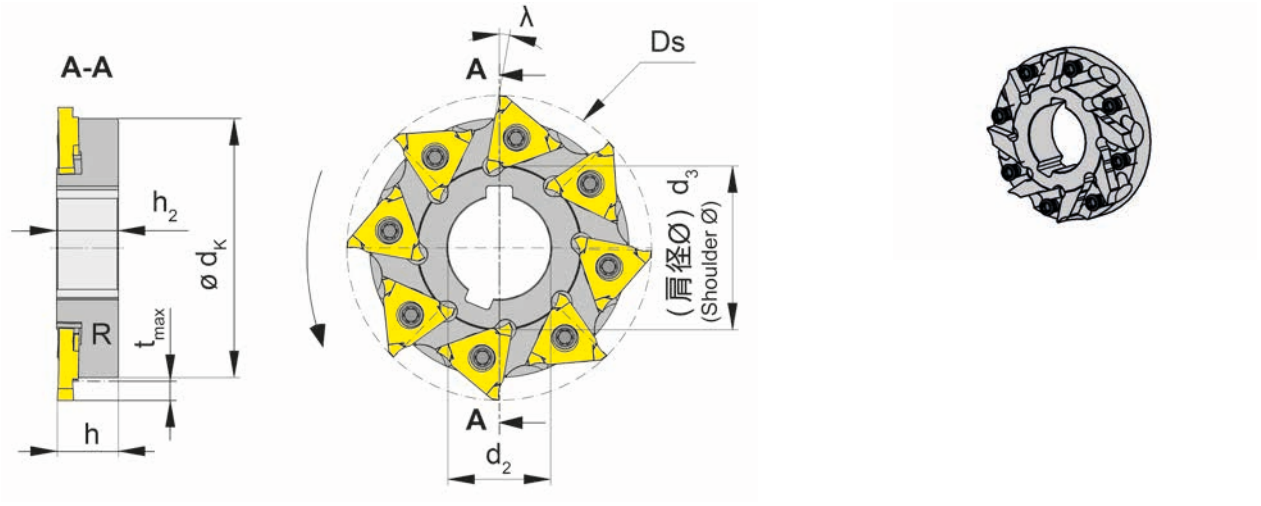

图示=右手型
Picture = right hand cutting version

产品型号 Part number	Z	Ds	d_2	h_2	h	d_K	λ	d_3	HWS
R381.0063.05	5	63	22	14.2	14	51	14°	34	314027R • 314041R • 314052R
R381.0080.08	8	80	27	16.2	16	68	10°	43	314027R • 314041R • 314052R
R381.0100.10	10	100	32	20.2	20	88	10°	48	314027R • 314041R • 314052R
L381.0063.05	5	63	22	14.2	14	51	14°	34	314027L • 314041L • 314052L
L381.0080.08	8	80	27	16.2	16	68	10°	43	314027L • 314041L • 314052L
L381.0100.10	10	100	32	20.2	20	88	10°	48	314027L • 314041L • 314052L

孔(d2)带纵向DIN138标准键槽
Bore (d2) with longitudinal keyway to DIN 138

tmax见刀片
tmax see inserts

配件
Spare Parts

盘铣刀 Disc Milling Cutter	锁紧螺钉 Clamping Screw	TORX PLUS®扳手 TORX PLUS® Wrench
R/L381...	**5.12T20P**	**T20PQ**

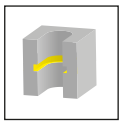

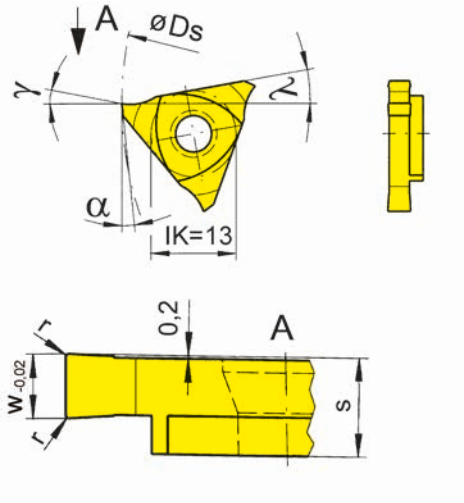

R=右手型-如图
R = right hand version shown

L=左手型
L = left hand version

硬质合金牌号
Carbide grades

▲ 库存
on stock

Δ 4周
4 weeks

产品型号 Part number	Nw	w	r	s	HIS		MG12	AS45	TI25	TN35
R314.0130.00	1.3	1.41	0.1	5.4	314027R			▲		▲
R314.0160.00	1.6	1.71	0.1	5.4	314027R			▲		▲
R314.0185.00	1.85	1.96	0.15	5.4	314027R			▲		▲
R314.0215.00	2.15	2.26	0.15	5.4	314027R		▲	▲		▲
R314.0265.00	2.65	2.76	0.15	5.4	314027R		▲	▲	▲	▲
R314.0315.00	3.15	3.26	0.15	5.4	314027R		▲	▲	▲	▲
R314.0415.00	4.15	4.26	0.15	5.4	314041R		▲	▲	▲	▲
R314.0515.00	5.15	5.26	0.15	5.4	314052R		▲	▲	▲	▲
L314.0130.00	1.3	1.41	0.1	5.4	314027L					▲
L314.0160.00	1.6	1.71	0.1	5.4	314027L					▲
L314.0185.00	1.85	1.96	0.15	5.4	314027L			▲		
L314.0215.00	2.15	2.26	0.15	5.4	314027L		Δ	▲		
L314.0265.00	2.65	2.76	0.15	5.4	314027L		Δ			▲
L314.0315.00	3.15	3.26	0.15	5.4	314027L		Δ	▲		▲
L314.0415.00	4.15	4.26	0.15	5.4	314041L		Δ	Δ		▲
L314.0515.00	5.15	5.26	0.15	5.4	314052L		Δ	▲		▲
						P	o	●	●	●
						M	-	●	●	●
						K	-	●	●	●
						N	-	o	●	●
						S	-	●	●	●
						H	-	-	-	-

几何形状取决于安装角度 λ
Geometrie depending on angle of seating λ

λ	γ	α
10°	15°	6°
14°	11°	10°

D

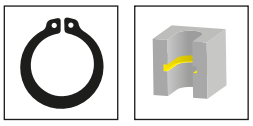

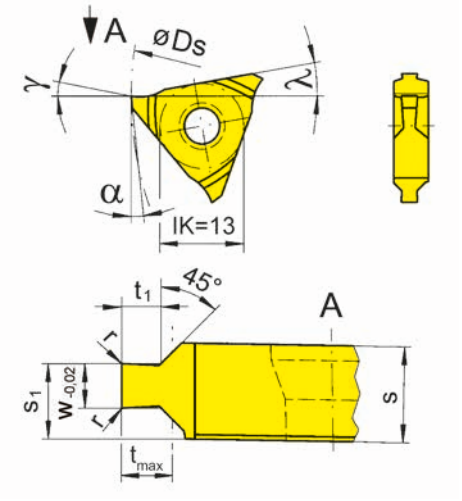

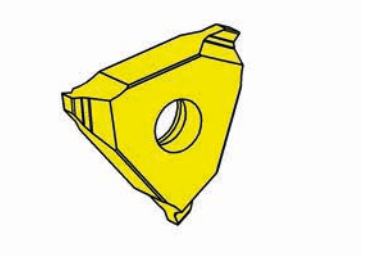

R=右手型-如图
R = right hand version shown

L=左手型
L = left hand version

▲ 库存
on stock

Δ 4周
4 weeks

硬质合金牌号
Carbide grades

产品型号 Part number	Nw	w	r	s_1	s	t_{max}	t_1	HIS	AS45	TN35
R314.1105.54	1.1	1.21	0.1	4.52	5.45	0.5	0.49	314041R		
R314.1307.54	1.3	1.41	0.1	4.62	5.45	0.75	0.67	314041R	Δ	Δ
R314.1308.54	1.3	1.41	0.1	4.62	5.45	0.85	0.83	314041R		
R314.1609.54	1.6	1.71	0.1	4.52	5.45	0.85	0.83	314041R	▲	▲
R314.1610.54	1.6	1.71	0.1	4.52	5.45	1	0.97	314041R	Δ	Δ
R314.1812.54	1.85	1.96	0.15	4.64	5.45	1.25	1.23	314041R	▲	▲
R314.2115.54	2.15	2.26	0.15	4.79	5.45	1.5	1.47	314041R	▲	▲
R314.2616.54	2.65	2.76	0.15	4.54	5.45	1.5	1.47	314041R	▲	▲
R314.2617.54	2.65	2.76	0.15	4.54	5.45	1.75	1.72	314041R	▲	▲
R314.3118.54	3.15	3.26	0.15	4.54	5.45	1.75	1.72	314041R	▲	▲
R314.4120.54	4.15	4.26	0.15	4.99	5.45	2	1.97	314041R	▲	▲
R314.4125.54	4.15	4.26	0.15	4.99	5.45	2.5	2.47	314041R	▲	▲
R314.5130.61	5.15	5.26	0.15	5.85	6.1	3	2.97	314052R	▲	▲
L314.1105.54	1.1	1.21	0.1	4.52	5.45	0.5	0.49	314041L		Δ
L314.1307.54	1.3	1.41	0.1	4.62	5.45	0.75	0.67	314041L		Δ
L314.1308.54	1.3	1.41	0.1	4.62	5.45	0.85	0.83	314041L		Δ
L314.1609.54	1.6	1.71	0.1	4.52	5.45	0.85	0.83	314041L	▲	▲
L314.1610.54	1.6	1.71	0.1	4.52	5.45	1	0.97	314041L		▲
L314.1812.54	1.85	1.96	0.15	4.64	5.45	1.25	1.23	314041L		▲
L314.2115.54	2.15	2.26	0.15	4.79	5.45	1.5	1.47	314041L		▲
L314.2616.54	2.65	2.76	0.15	4.54	5.45	1.5	1.47	314041L		▲
L314.2617.54	2.65	2.76	0.15	4.54	5.45	1.75	1.72	314041L		▲
L314.3118.54	3.15	3.26	0.15	4.54	5.45	1.75	1.72	314041L	Δ	
L314.4120.54	4.15	4.26	0.15	4.99	5.45	2	1.97	314041L	Δ	Δ
L314.4125.54	4.15	4.26	0.15	4.99	5.45	2.5	2.47	314041L		Δ
L314.5130.61	5.15	5.26	0.15	5.85	6.1	3	2.97	314052L		Δ

P	●	●
M	●	●
K	●	●
N	o	●
S	●	●
H	-	-

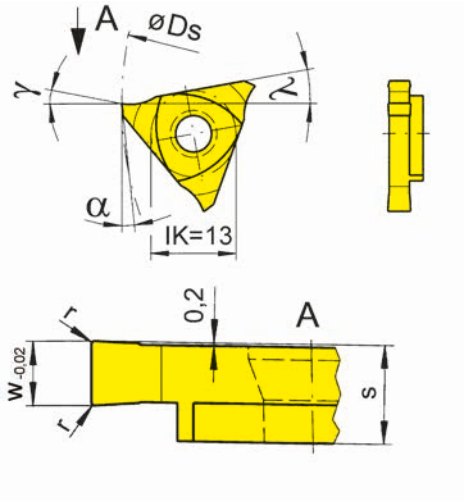

R=右手型-如图
R = right hand version shown

L=左手型
L = left hand version

▲ 库存
on stock

硬质合金牌号
Carbide grades

Δ 4周
4 weeks

产品型号 Part number	Nw	w	r	s	HIS		MG12	TI25	TN35
R314.0215.40	2.15	2.26	0.15	5.4	314027R		Δ	Δ	Δ
R314.0265.40	2.65	2.76	0.15	5.4	314027R		Δ	Δ	▲
R314.0315.40	3.15	3.26	0.15	5.4	314027R		Δ	Δ	▲
L314.0215.40	2.15	2.26	0.15	5.4	314027L			Δ	Δ
L314.0265.40	2.65	2.76	0.15	5.4	314027L		Δ	Δ	Δ
L314.0315.40	3.15	3.26	0.15	5.4	314027L		Δ	Δ	
						P	-	-	-
						M	-	-	-
						K	-	-	-
						N	o	●	●
						S	-	-	-
						H	-	-	-

几何形状取决于安装角度 λ
Geometrie depending on angle of seating λ

λ	γ	α
10°	15°	6°
14°	11°	10°

D

M101

E

槽铣刀

切削刃自 Ø 63 mm
槽宽 1.2 - 4.6 mm

Groove milling cutter

from cutting edge Ø 63 mm
Width of groove 1,2 - 4,6 mm

槽铣刀
Groove milling cutter
M101

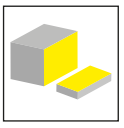

页/Page
235

盘铣刀
Disc Milling Cutter
M101

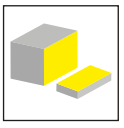

页/Page
236-237

E

芯轴刀柄式铣刀
Arbour Mounted Cutter
M101

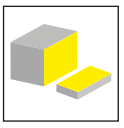

页/Page
238-239

刀片
Insert
S101

.3

页/Page
240, 243

.E

页/Page
241-242

.FY

页/Page
244

技术信息
Technical Instructions

页/Page
245

槽铣刀
Groove milling cutter

M101

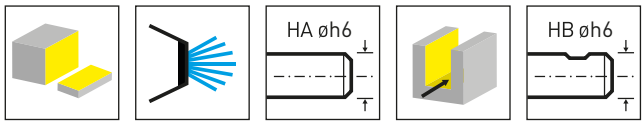

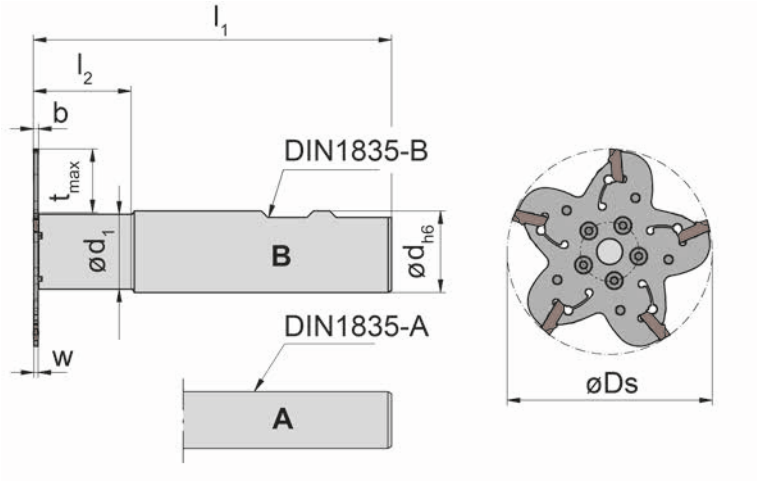

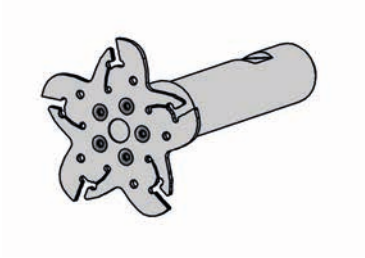

图示=右手型
Picture = right hand cutting version

产品型号 Part number	Z	Ds	d	l_1	l_2	d_1	b	t_{max}	形式 Form	槽宽 Width of groove	n_{max}	HWS
M101.063.D16.23.2.12A	5	63	16	110	30	23	0.95	19.5	A	1.2-1.2	7500	10112
M101.063.D16.23.2.14A	5	63	16	110	30	23	1.15	19.5	A	1.4-1.4	7500	10114
M101.063.D16.23.2.16A	5	63	16	110	30	23	1.3	19.5	A	1.6-1.8	7500	10116
M101.063.D16.23.2.20A	5	63	16	110.35	30.4	23	1.6	19.5	A	2.0-2.3	7500	10120
M101.063.D20.23.2.12B	5	63	20	110	30	23	0.95	19.5	B	1.2-1.2	7500	10112
M101.063.D20.23.2.14B	5	63	20	110	30	23	1.15	19.5	B	1.4-1.4	7500	10140
M101.063.D20.23.2.16B	5	63	20	110	30	23	1.3	19.5	B	1.6-1.8	7500	10116
M101.063.D20.23.2.20B	5	63	20	110.35	30.4	23	1.6	19.5	B	2.0-2.3	7500	10120
M101.063.D25.23.2.12B	5	63	25	110	30	23	0.95	19.5	B	1.2-1.2	7500	10112
M101.063.D25.23.2.16B	5	63	25	110	30	23	1.3	19.5	B	1.6-1.8	7500	10116
M101.063.D25.23.2.20B	5	63	25	110	30	23	1.6	19.5	B	2.0-2.3	7500	10120

P101.01扳手不包括在铣刀中-需另行订购!
Wrench P101.01 is not combined with slotting cutter - separate order required!

配件
Spare Parts

槽铣刀 Groove milling cutter	刀柄 Shank	刀板 Blade	TORX PLUS®扳手 TORX PLUS® Wrench	锁紧螺钉 Clamping Screw
M101.063.D16.23.2.12A	**020.D16.23.2.12 A**	**M101.0063.28.23.12**	**T8PL**	
M101.063.D16.23.2.14A	**020.D16.23.2.12 A**	**M101.0063.28.23.14**	**T8PL**	
M101.063.D16.23.2.16A	**020.D16.23.2.16A**	**M101.0063.28.23.16**	**T8PL**	
M101.063.D16.23.2.20A	**020.D16.23.2.16A**	**M101.0063.28.23.20**	**T8PL**	
M101.063.D20.23.2.12B	**020.D20.23.2.12B**	**M101.0063.28.23.12**	**T8PL**	
M101.063.D20.23.2.14B	**020.D20.23.2.12B**	**M101.0063.28.23.14**	**T8PL**	
M101.063.D20.23.2.16B	**020.D20.23.2.16B**	**M101.0063.28.23.16**	**T8PL**	
M101.063.D20.23.2.20B	**020.D20.23.2.16B**	**M101.0063.28.23.20**	**T8PL**	
M101.063.D25.23.2.12B	**020.D25.23.2.12B**	**M101.0063.28.23.12**	**T8PL**	**030.3543.T8P**
M101.063.D25.23.2.16B	**020.D25.23.2.16B**	**M101.0063.28.23.16**	**T8PL**	**030.3543.T8P**
M101.063.D25.23.2.20B	**020.D25.23.2.20B**	**M101.0063.28.23.20**	**T8PL**	**030.3543.T8P**

盘铣刀
Disc Milling Cutter

M101

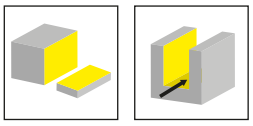

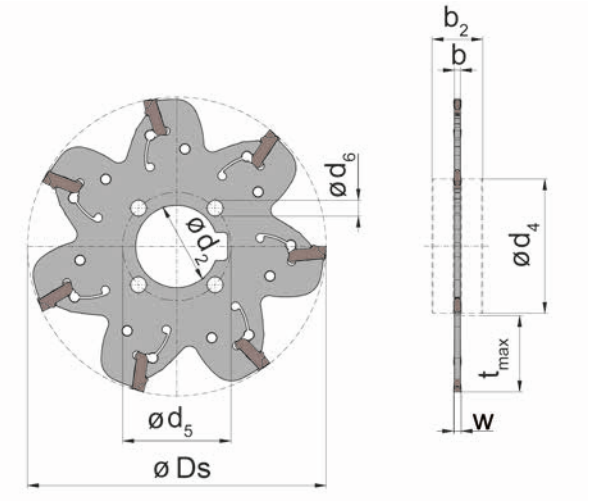

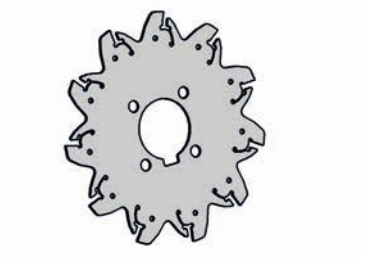

图示=右手型
Picture = right hand cutting version

产品型号 Part number	Z	Ds	t_{max}	b	d_2	b_2	d_4	d_6	d_5	槽宽 Width of groove	n_{max}	HWS
M101.0080.22.12	7	80	20	0.95	22	13	36	4.25	29	1.2-1.2	6000	10112
M101.0080.22.14	7	80	20	1.15	22	13.1	36	4.25	29	1.4-1.4	6000	10114
M101.0080.22.16	7	80	20	1.3	22	13.3	36	4.25	29	1.6-1.8	6000	10116
M101.0100.22.16	9	100	30	1.3	22	13.3	36	4.25	29	1.6-1.8	5000	10116
M101.0125.32.16	11	125	33	1.3	32	21.3	55	6.25	45	1.6-1.8	4000	10116
M101.0080.22.20	7	80	20	1.6	22	13.6	36	4.25	29	2.0-2.3	6000	10120
M101.0100.22.20	9	100	30	1.6	22	13.6	36	4.25	29	2.0-2.3	5000	10120
M101.0125.32.20	11	125	33	1.6	32	21.6	55	6.25	45	2.0-2.3	4000	10120

扳手**P101.01**和传动垫圈组不包括在铣刀内-需另行订购！
Wrench P101.01 and the driving collar sets are not combined with slotting cutter - separate order required!

配件
Spare Parts

盘铣刀 Disc Milling Cutter	**传动垫圈组** Driving hole ringset
M101.0...	**020.22.06.36**
M101.0125.32.16/...20	**020.32.10.55**

盘铣刀
Disc Milling Cutter

M101

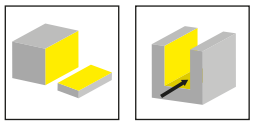

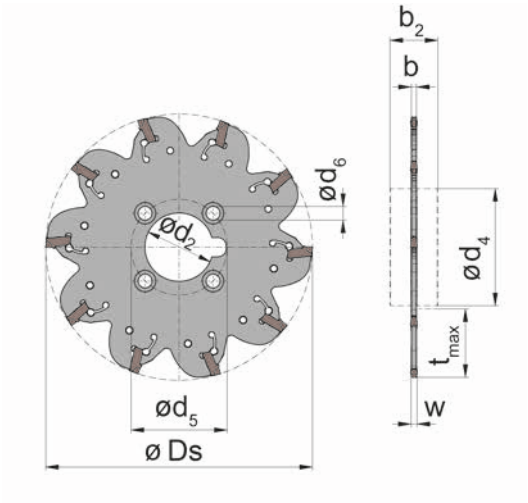

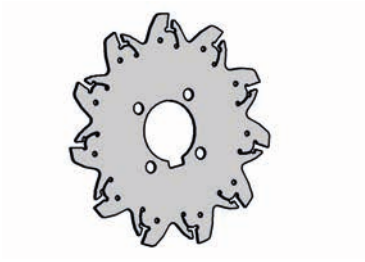

图示=右手型
Picture = right hand cutting version

产品型号 Part number	Z	Ds	t_{max}	b	d_2	b_2	d_4	d_6	d_5	槽宽 Width of groove	n_{max}	HWS
M101.0080.22.30	6	80	20	2.4	22	14.4	36	4.25	29	2.8-3.4	6000	10130
M101.0100.22.30	8	100	26	2.4	22	22.4	46	5.25	32	2.8-3.4	5000	10130
M101.0125.32.30	10	125	34	2.4	32	22.4	55	6.25	45	2.8-3.4	4000	10130
M101.0160.40.30	12	160	39	2.4	40	26.4	80	11.25	63	2.8-3.4	3000	10130
M101.0080.22.40	6	80	20	3.2	22	15.2	36	4.25	29	3.8-4.6	6000	10140
M101.0100.22.40	8	100	26	3.2	22	23.2	46	5.25	32	3.8-4.6	5000	10140
M101.0125.32.40	10	125	34	3.2	32	23.2	55	6.25	45	3.8-4.6	4000	10140
M101.0160.40.40	12	160	39	3.2	40	27.2	80	11.25	63	3.8-4.6	3000	10140
M101.0200.40.40	16	200	59	3.2	40	27.2	80	11.25	63	3.8-4.6	2500	10140

扳手**P101.02**和传动垫圈组不包括在铣刀内-需另行订购！
Wrench P101.02 and the driving collar sets are not combined with slotting cutter - separate order required!

配件
Spare Parts

盘铣刀 Disc Milling Cutter	**传动垫圈组** Driving hole ringset
M101.0...	**020.22.06.36**
M101.0125.32.16/...20	**020.32.10.55**

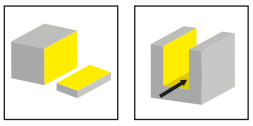

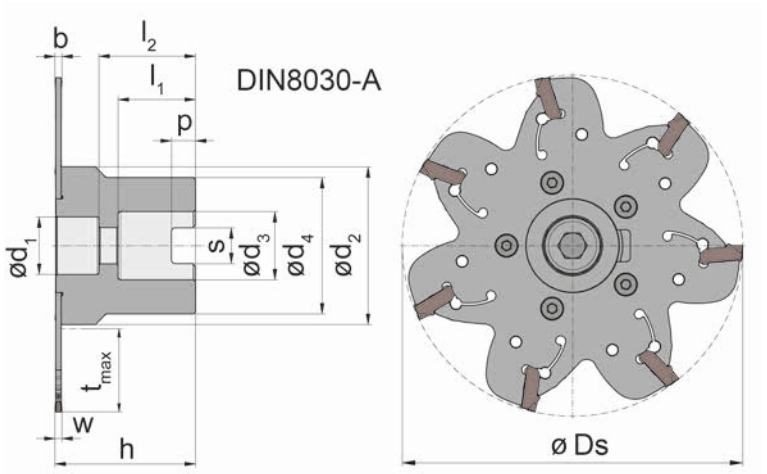

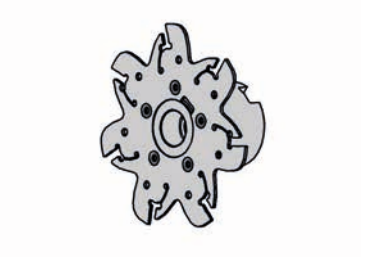

图示=右手型
Picture = right hand cutting version

产品型号 Part number	Z	Ds	t_{max}	h	b	d_1	d_4	l_1	l_2	s	P	d_2	d_3	n_{max}	槽宽 Width of groove	HWS
M101.0080.A16.12	7	80	20	33	0.95	13.5	32	18	22.7	8.4	5.6	37	16	6000	1.2-1.2	10112
M101.0080.A16.14	7	80	20	33.2	1.15	13.5	32	18	22.7	8.4	5.6	37	16	6000	1.4-1.4	10114
M101.0080.A16.16	7	80	20	33	1.3	13.5	32	18	22.7	8.4	5.6	37	16	6000	1.6-1.8	10116
M101.0100.A22.16	9	100	28	37	1.3	18.5	40.5	20	24.7	10.4	6.3	40.5	22	5000	1.6-1.8	10116
M101.0125.A32.16	11	125	34	50	1.3	28.5	45	25	36.7	14.4	8	55	32	4000	1.6-1.8	10116
M101.0080.A16.20	7	80	20	33	1.6	13.5	32	18	22.7	8.4	5.6	37	16	6000	2.0-2.3	10120
M101.0100.A22.20	9	100	28	37	1.6	18.5	40.5	20	24.7	10.4	6.3	40.5	22	5000	2.0-2.3	10120
M101.0125.A32.20	11	125	34	50	1.6	28.5	45	25	36.7	14.4	8	55	32	4000	2.0-2.3	10120

P101.01扳手不包括在铣刀中-需另行订购！
Wrench P101.01 is not combined with slotting cutter - separate order required!

配件
Spare Parts

芯轴刀柄式铣刀 Arbour Mounted Cutter	锁紧螺钉 Clamping Screw	刀板 Blade	TORX PLUS®扳手 TORX PLUS® Wrench
M101.0080.A16.12	**030.3543.T8P**	**M101.0080.28.12**	**T8PL**
M101.0080.A16.14	**030.3543.T8P**	**M101.0080.28.14**	**T8PL**
M101.0080.A16.16	**030.3543.T8P**	**M101.0080.28.16**	**T8PL**
M101.0100.A22.16	**030.3543.T8P**	**M101.0100.28.16**	**T8PL**
M101.0125.A32.16	**030.3543.T8P**	**M101.0125.28.16**	**T8PL**
M101.0080.A16.20	**030.3543.T8P**	**M101.0080.28.20**	**T8PL**
M101.0100.A22.20	**030.3543.T8P**	**M101.0100.28.20**	**T8PL**
M101.0125.A32.20	**030.3543.T8P**	**M101.0125.28.20**	**T8PL**

芯轴刀柄式铣刀
Arbour Mounted Cutter

M101

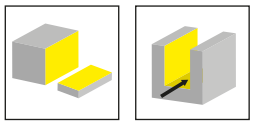

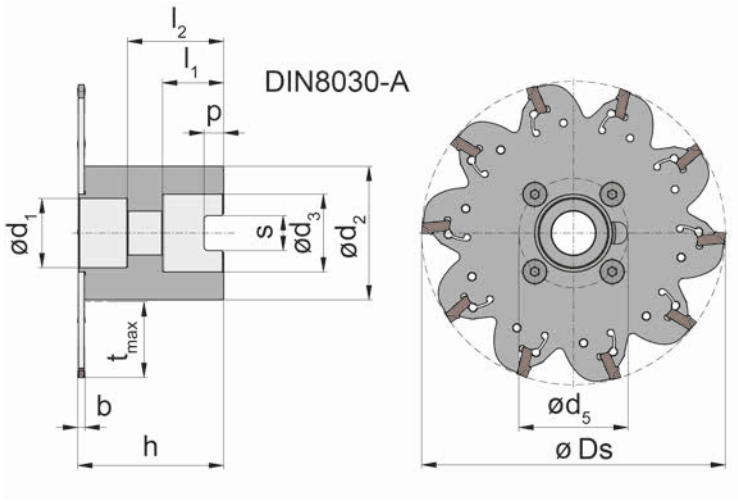

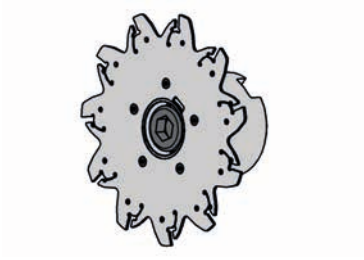

图示=右手型
Picture = right hand cutting version

产品型号 Part number	Z	Ds	t_{max}	h	b	d_1	l_1	l_2	s	P	d_2	d_3	n_{max}	槽宽 Width of groove	HWS
M101.0080.A22.30	6	80	19	37	2.4	18.5	20	24.7	10.4	6.3	22	22	5000	2.8-3.4	10130
M101.0100.A22.30	8	100	29	37	2.4	18.5	20	24.7	10.4	6.3	40	22	5000	2.8-3.4	10130
M101.0125.A32.30	10	125	34	50	2.4	28.5	25	36.7	14.4	8	55	32	4000	2.8-3.4	10130
M101.0160.A40.30	12	160	39	50	2.4	34.5	28	35	16.4	9	80	40	3000	2.8-3.4	10130
M101.0080.A22.40	6	80	19	37.9	3.2	18.5	20	24.7	10.4	6.3	22	22	5000	3.8-4.6	10140
M101.0100.A22.40	8	100	29	37.9	3.2	18.5	20	24.7	10.4	6.3	40	22	5000	3.8-4.6	10140
M101.0125.A32.40	10	125	34	50.9	3.2	28.5	25	36.7	14.4	8	55	32	4000	3.8-4.6	10140
M101.0160.A40.40	12	160	39	50.9	3.2	34.5	28	35	16.4	9	80	40	3000	3.8-4.6	10140
M101.0200.A40.40	16	200	59	50.9	3.2	34.5	28	35	16.4	9	80	40	2500	3.8-4.6	10140

P101.02扳手不包括在铣刀中-需另行订购！
Wrench P101.02 is not combined with slotting cutter - separate order required!

配件
Spare Parts

芯轴刀柄式铣刀 Arbour Mounted Cutter	锁紧螺钉 Clamping Screw	刀板 Blade	TORX PLUS®扳手 TORX PLUS® Wrench
M101.0080.A22.30	**030.0520.0912**	**M101.0080.28.30**	**T15PQ**
M101.0100.A22.30	**030.0520.0912**	**M101.0100.22.30**	**T15PQ**
M101.0125.A32.30	**030.0620.0913**	**M101.0125.32.30**	**T20PQ**
M101.0160.A40.30	**030.1030.0911**	**M101.0160.40.30**	
M101.0080.A22.40	**030.0520.0912**	**M101.0080.28.40**	**T15PQ**
M101.0100.A22.30	**030.0520.0912**	**M101.0100.22.40**	**T15PQ**
M101.0125.A32.30	**030.0620.0913**	**M101.0125.32.40**	**T20PQ**
M101.0160.A40.30	**030.1030.0911**	**M101.0160.40.40**	
M101.0200.A40.40	**030.1030.0911**	**M101.0080.28.40**	

S101

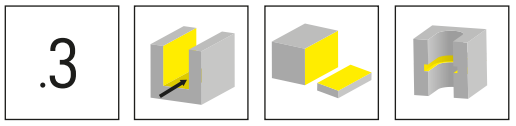

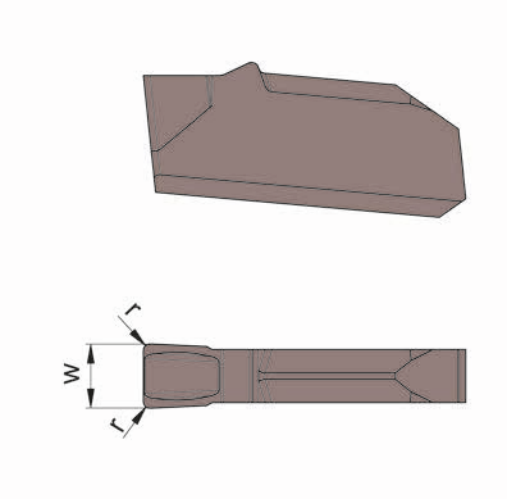

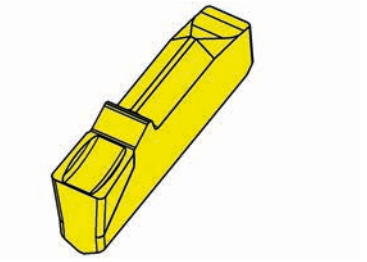

硬质合金牌号
Carbide grades

▲ 库存
on stock

Δ 4周
4 weeks

产品型号 Part number	w	r	HIS		AS45	IG35
S101.0120.315	1.2	0.15	10112		▲	▲
S101.0140.315	1.4	0.15	10114		▲	
S101.0160.315	1.6	0.15	10116		▲	▲
S101.0200.320	2	0.2	10120		▲	▲
S101.0250.320	2.5	0.2	10120		Δ	Δ
				P	●	-
				M	●	●
				K	●	-
				N	o	-
				S	●	●
				H	-	-

S101

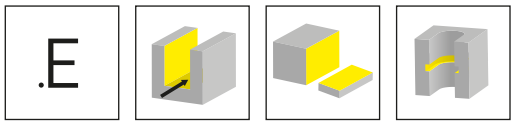

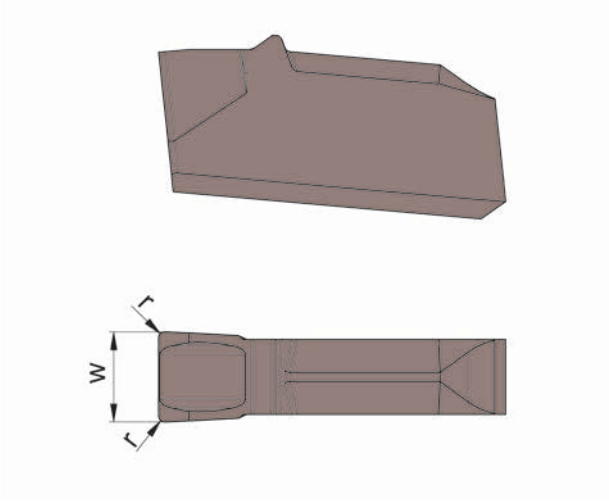

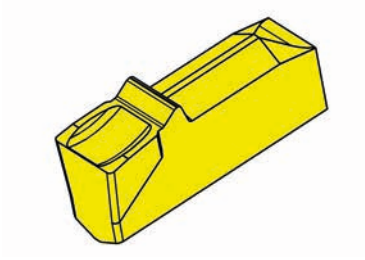

硬质合金牌号
Carbide grades

▲ 库存
on stock

Δ 4周
4 weeks

产品型号 Part number	w	r	HIS		AS45
S101.0300.E32	3	0.2	10130		▲
S101.0400.E33	4	0.3	10140		▲
				P	●
				M	●
				K	●
				N	o
				S	●
				H	-

E

S101

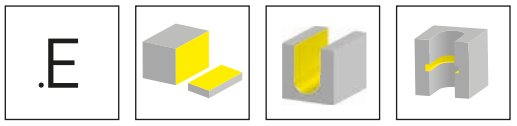

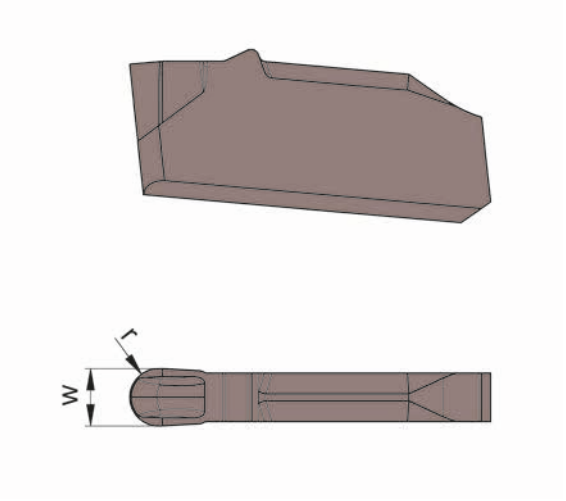

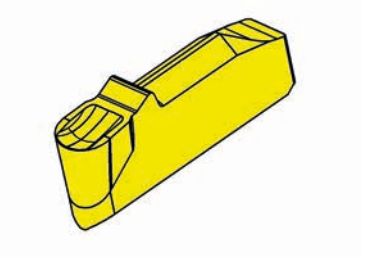

硬质合金牌号
Carbide grades

▲ 库存
on stock

Δ 4周
4 weeks

产品型号 Part number	w	r	HIS		AS45
S101.0160.E3.R08	1.6	0.8	10116		▲
S101.0200.E3.R10	2	1	10120		▲
S101.0300.E3.R15	3	1.5	10130		▲
				P	●
				M	●
				K	●
				N	o
				S	●
				H	-

S101

.3

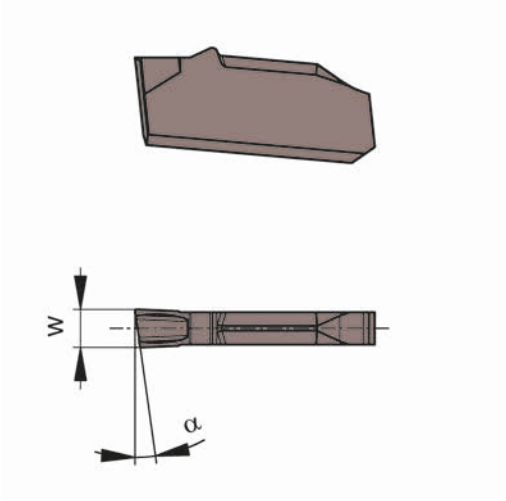

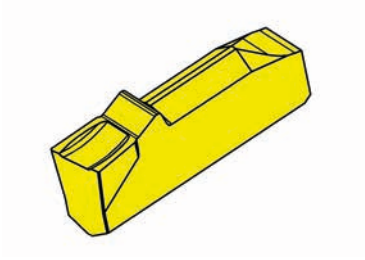

R=右手型-如图
R = right hand version shown

L=左手型
L = left hand version

▲ 库存
on stock

Δ 4周
4 weeks

硬质合金牌号
Carbide grades

产品型号 Part number	w	α	HIS	AS45	EG55	IG35
RS101.0812.30	1.2	8°	10112		▲	▲
RS101.0816.30	1.6	8°	10116	▲		▲
RS101.0820.30	2	8°	10120	▲		▲
RS101.0825.30	2.5	8°	10120	▲		▲
LS101.0812.30	1.2	8°	10112		▲	▲
LS101.0816.30	1.6	8°	10116	▲		▲
LS101.0820.30	2	8°	10120	▲		▲
LS101.0825.30	2.5	8°	10120	▲		▲

	AS45	EG55	IG35
P	●	●	-
M	●	o	●
K	●	o	-
N	o	-	-
S	●	-	●
H	-	-	-

E

.FY

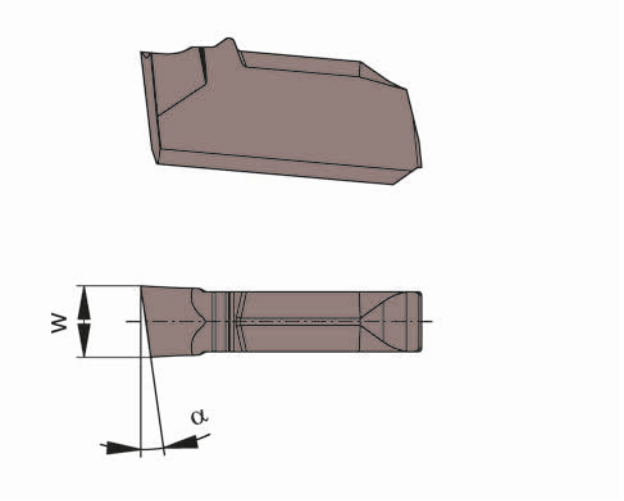

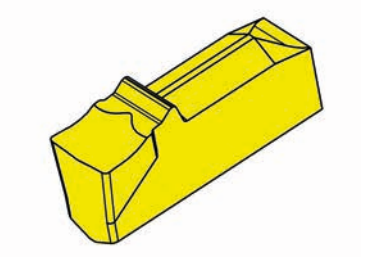

R=右手型-如图
R = right hand version shown

L=左手型
L = left hand version

▲ 库存
on stock

Δ 4周
4 weeks

硬质合金牌号
Carbide grades

产品型号 Part number	w	α	HIS	AS45	IG35
RS101.0830.FY0	3	8°	10130	▲	▲
LS101.0830.FY0	3	8°	10130	▲	▲
				P ●	-
				M ●	●
				K ●	-
				N o	-
				S ●	●
				H -	-

定位夹紧扳手 P101.01

Setting position clamping wrench P101.01

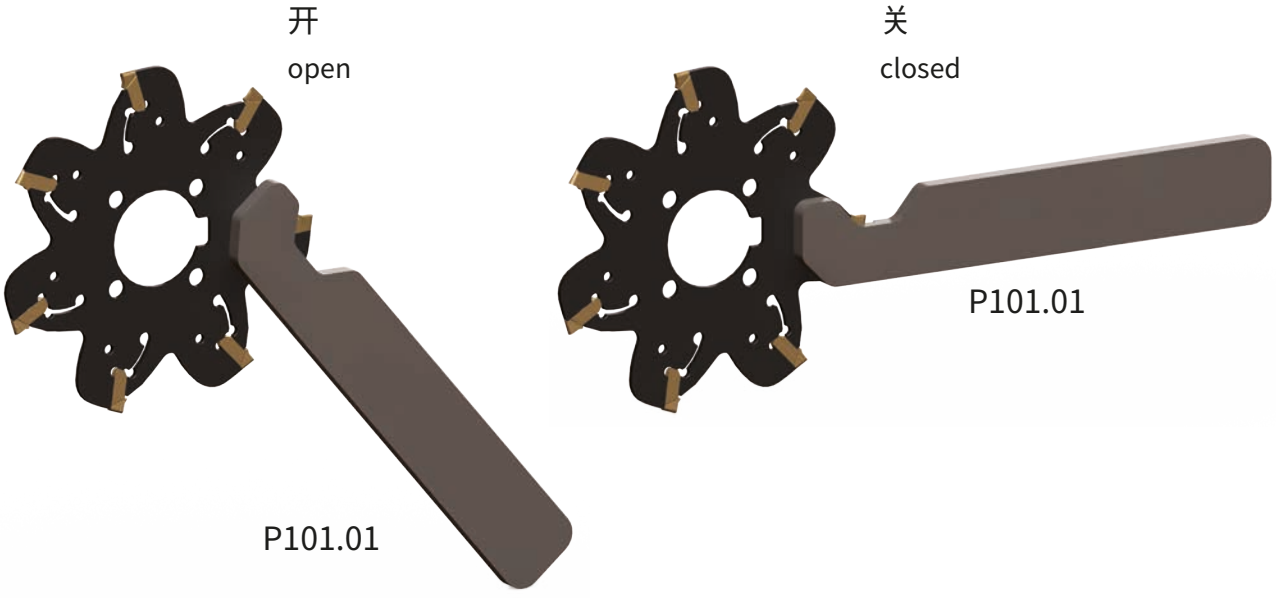

仅使用逆铣的方式可避免铁屑堵塞。

更换刀片后，将进给量降低 50%，直至达到 0.5 - 1 毫米的初始切削深度

Use only conventional milling to avoid chip jamming.
After changing inserts, reduce the feed rate by 50% until an initial depth of cut of 0.5 - 1 mm is reached

请注意最大转速！

Please note the max. revolutions!

Ø 盘铣刀 Ø Disc milling cutter	最大转速n_{max} max. Revolutions n_{max}
Ø 63 mm	7.500 min^{-1}
Ø 80 mm	6.000 min^{-1}
Ø 100 mm	5.000 min^{-1}
Ø 125 mm	4.000 min^{-1}
Ø 160 mm	3.000 min^{-1}
Ø 200 mm	2.500 min^{-1}

E

F

系列/System	页/Page
382/383	**248**
M310	**262**

盘铣刀
Disc Milling Cutter
382

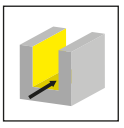

页/Page
250-253

芯轴刀柄式铣刀
Arbour Mounted Cutter
383

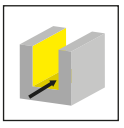

页/Page
254-256

可转位刀片
Indexable insert
314

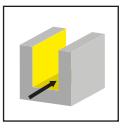

页/Page
257

页/Page
258-260

382/383

F

盘铣刀
芯轴刀柄式铣刀

槽宽 6 - 10 mm
切削刃 Ø 80 - 200 mm

Disc Milling Cutter
Arbour Mounted Cutter

Width of groove 6 - 10 mm
Cutting edge Ø 80 - 200 mm

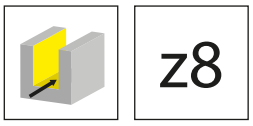

z8

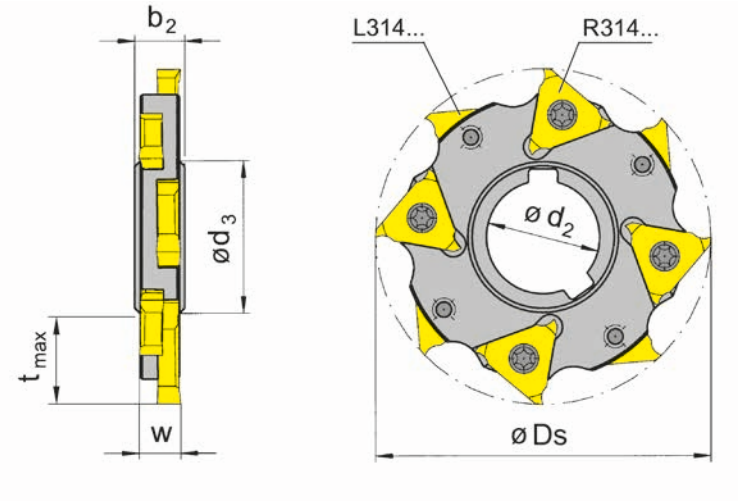

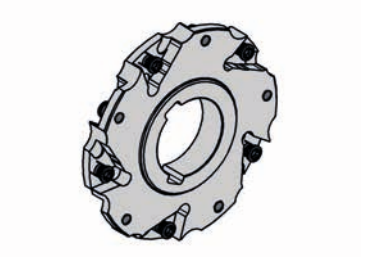

图示=右手型
Picture = right hand cutting version

F

产品型号 Part number	Z	Ds	t_{max}	d_2	b_2	d_3	w	右手型刀片 right hand insert	左手型刀片 left hand insert	HWS
382.0080.27.06	8	80	21	27	10	36	6	4x R314....	4x L314...	314027R • 314027L
382.0080.27.08	8	80	21	27	12	36	8	4x R314....	4x L314...	314041R • 314041L
382.0080.27.10	8	80	21	27	12	36	10	4x R314....	4x L314...	314052R • 314052L

孔(d2)带纵向DIN138标准键槽
Bore (d2) with longitudinal keyway to DIN 138

配件
Spare Parts

盘铣刀 Disc Milling Cutter	**锁紧螺钉** Clamping Screw	**TORX PLUS®扳手** TORX PLUS® Wrench
382.0080.27.06	**5F.06T15P**	**T15PQ**
382.0080.27.08	**5F.08T20P**	**T20PQ**
382.0080.27.10	**5.10T20P**	**T20PQ**

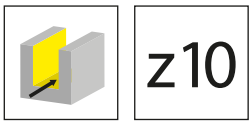

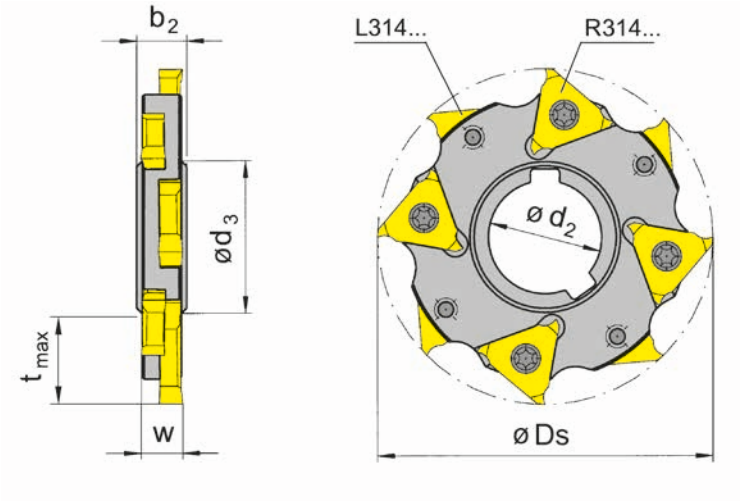

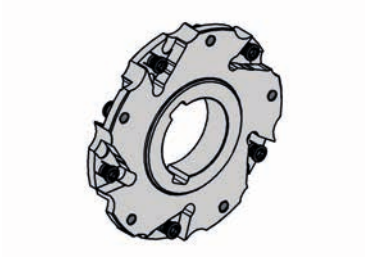

图示=右手型
Picture = right hand cutting version

产品型号 Part number	Z	Ds	t_{max}	d_2	b_2	d_3	w	右手型刀片 right hand insert	左手型刀片 left hand insert	HWS
382.0100.32.06	10	100	25.5	32	10	47	6	5x R314...	5x L314...	314027R • 314027L
382.0100.32.08	10	100	25.5	32	12	47	8	5x R314...	5x L314...	314041R • 314041L
382.0100.32.10	10	100	25.5	32	12	47	10	5x R314...	5x L314...	314052R • 314052L

孔(d2)带纵向DIN138标准键槽
Bore (d2) with longitudinal keyway to DIN 138

F

配件
Spare Parts

盘铣刀 Disc Milling Cutter	**锁紧螺钉** Clamping Screw	**TORX PLUS®扳手** TORX PLUS® Wrench
382.0100.32.06	**5F.06T15P**	**T15PQ**
382.0100.32.08	**5F.08T20P**	**T20PQ**
382.0100.32.10	**5.10T20P**	**T20PQ**

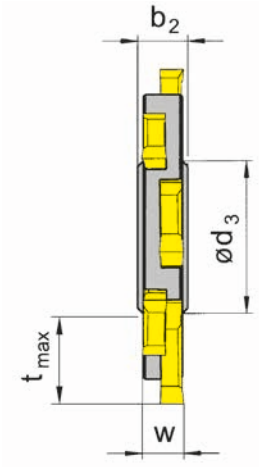

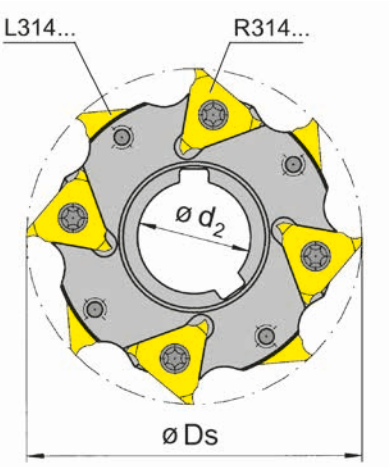

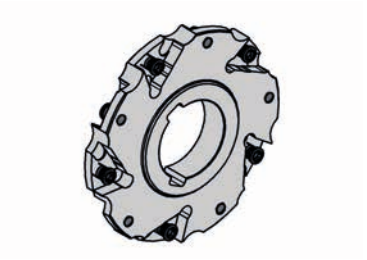

图示=右手型
Picture = right hand cutting version

产品型号 Part number	Z	Ds	t_{max}	d_2	b_2	d_3	w	右手型刀片 right hand insert	左手型刀片 left hand insert	HWS
382.0125.40.06	12	125	32.5	40	10	58	6	6x R314...	6x L314...	314027R • 314027L
382.0125.40.08	12	125	32.5	40	12	58	8	6x R314...	6x L314...	314041R • 314041L
382.0125.40.10	12	125	32.5	40	14	58	10	6x R314...	6x L314...	314052R • 314052L
382.0160.40.06	16	160	50	40	10	58	6	8x R314...	8x L314...	314027R • 314027L
382.0160.40.08	16	160	50	40	12	58	8	8x R314...	8x L314...	314041R • 314041L
382.0160.40.10	16	160	50	40	14	58	10	8x R314...	8x L314...	314052R • 314052L
382.0160.40.12	15	160	50	40	14	58	12	2x5 R314...	5x L314...	314052R • 314052L

孔(d2)带纵向DIN138标准键槽
Bore (d2) with longitudinal keyway to DIN 138

配件
Spare Parts

盘铣刀 Disc Milling Cutter	锁紧螺钉 Clamping Screw	TORX PLUS®扳手 TORX PLUS® Wrench
382...06	**5F.06T15P**	**T15PQ**
382...08	**5F.08T20P**	**T20PQ**
382...10/12	**5.10T20P**	**T20PQ**

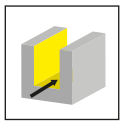

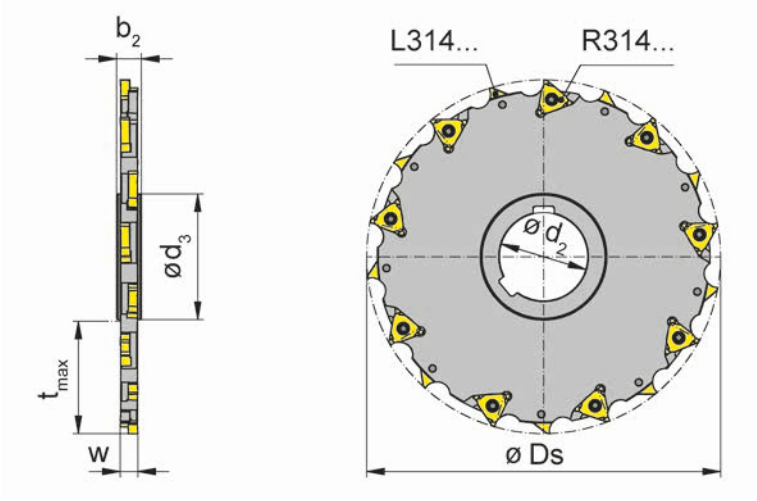

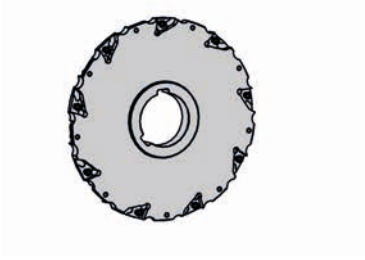

图示=右手型
Picture = right hand cutting version

产品型号 Part number	Z	Ds	t_{max}	d_2	b_2	d_3	w	右手型刀片 right hand insert	左手型刀片 left hand insert	HWS
382.0200.50.06	18	200	63.5	50	10	71	6	9x R314...	9x L314...	314027R • 314027L
382.0200.50.08	18	200	63.5	50	12	71	8	9x R314...	9x L314...	314041R • 314041L
382.0200.50.10	18	200	63.5	50	14	71	10	9x R314...	9x L314...	314052R • 314052L
382.0200.50.12	18	200	63.5	50	14	71	12	2x6 R314...	6x L314...	314052R • 314052L
382.0200.50.14	18	200	63.5	50	16	71	14	2x6 R314...	6x L314...	314052R • 314052L

孔(d2)带纵向DIN138标准键槽
Bore (d2) with longitudinal keyway to DIN 138

F

配件
Spare Parts

盘铣刀 Disc Milling Cutter	锁紧螺钉 Clamping Screw	TORX PLUS®扳手 TORX PLUS® Wrench
382.0200.50.06	**5F.06T15P**	**T15PQ**
382.0200.50.08	**5F.08T20P**	**T20PQ**
382.0200.50....	**5.10T20P**	**T20PQ**

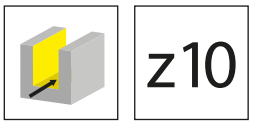

z10

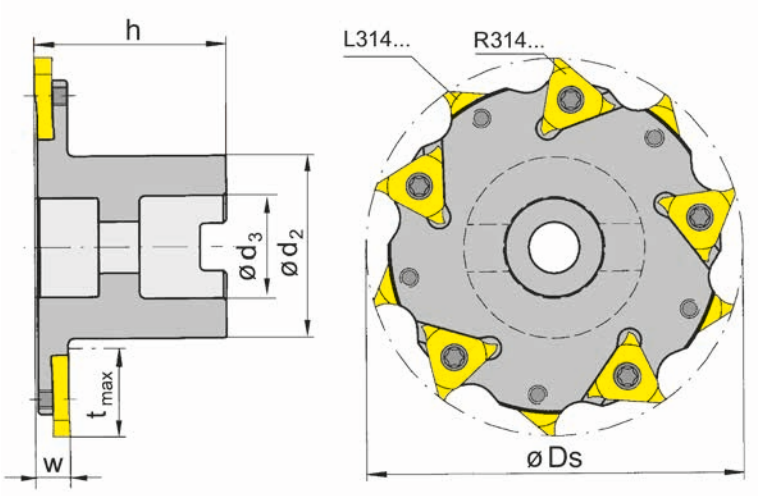

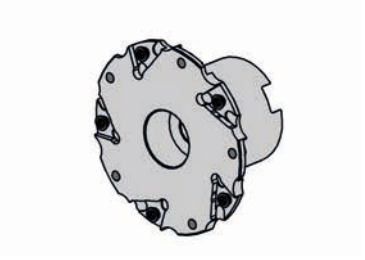

图示=右手型
Picture = right hand cutting version

F

产品型号 Part number	Z	Ds	t_{max}	h	d_2	d_3	w	右手型刀片 right hand insert	左手型刀片 left hand insert	HWS
383.0100.27.06	10	100	25	50	48	27	6	5x R314...	5x L314...	314027R • 314027L
383.0100.27.08	10	100	25	50	48	27	8	5x R314...	5x L314...	314041R • 314041L
383.0100.27.10	10	100	25	50	48	27	10	5x R314...	5x L314...	314052R • 314052L

孔(d3)带DIN138标准双键槽
Bore (d3) with cross keyway to DIN 138

配件
Spare Parts

芯轴刀柄式铣刀 Arbour Mounted Cutter	**锁紧螺钉** Clamping Screw	**TORX PLUS®扳手** TORX PLUS® Wrench
383.0100.27.06	**5F.06T15P**	**T15PQ**
383.0100.27.08	**5F.08T20P**	**T20PQ**
383.0100.27.10	**5.10T20P**	**T20PQ**

z12

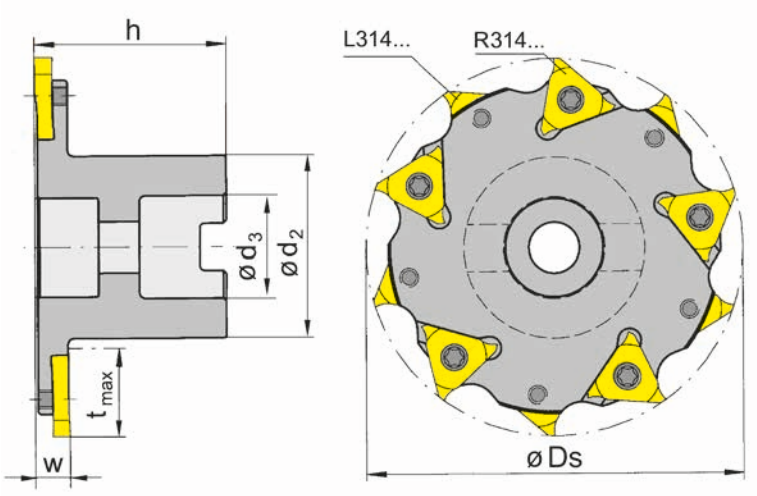

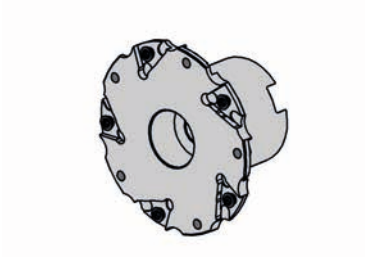

图示=右手型
Picture = right hand cutting version

产品型号 Part number	Z	Ds	t_{max}	h	d_2	d_3	w	右手型刀片 right hand insert	左手型刀片 left hand insert	HWS
383.0125.32.06	12	125	32	50	56	32	6	6x R314...	6x L314...	314027R • 314027L
383.0125.32.08	12	125	32	50	56	32	8	6x R314...	6x L314...	314041R • 314041L

孔(d3)带DIN138标准双键槽
Bore (d3) with cross keyway to DIN 138

F

配件
Spare Parts

芯轴刀柄式铣刀 Arbour Mounted Cutter	**锁紧螺钉** Clamping Screw	**TORX PLUS®扳手** TORX PLUS® Wrench
383.0125.32.06	**5F.06T15P**	**T15PQ**
383.0125.32.08	**5F.08T20P**	**T20PQ**

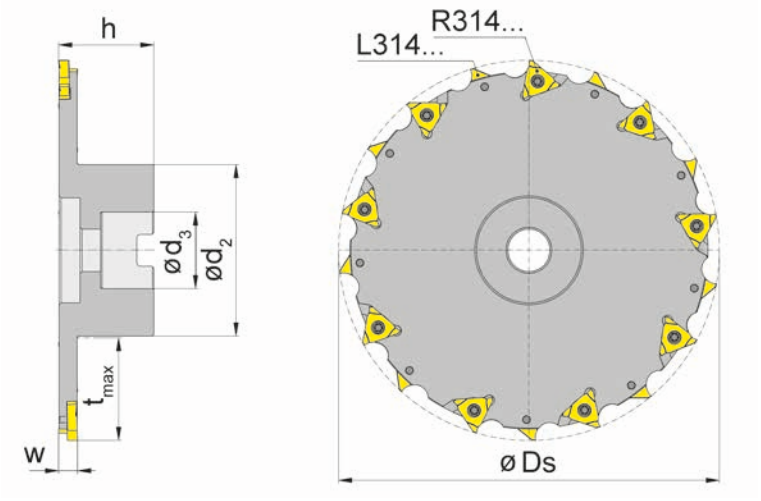

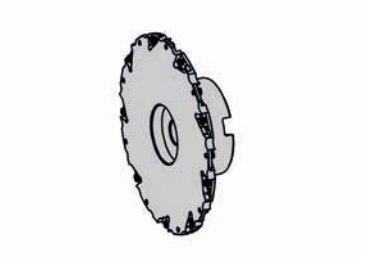

图示=右手型
Picture = right hand cutting version

产品型号 Part number	Z	Ds	t_{max}	h	d_2	d_3	w	右手型刀片 right hand insert	左手型刀片 left hand insert	HWS
383.0160.40.06	16	160	44	60	70	40	6	8x R314...	8x L314...	314027R • 314027L
383.0160.40.08	16	160	44	60	70	40	8	8x R314...	8x L314...	314041R • 314041L
383.0200.40.06	18	200	54	50	90	40	6	9x R314...	9x L314...	314027R • 314027L
383.0200.40.08	18	200	54	50	90	40	8	9x R314...	9x L314...	314041R • 314041L
383.0200.40.10	18	200	54	50	90	40	10	9x R314...	9x L314...	314052R • 314052L
383.0200.40.12	18	200	54	50	90	40	12	2x6 R314...	6x L314...	314052R • 314052L

孔(d3)带DIN138标准双键槽
Bore (d3) with cross keyway to DIN 138

配件
Spare Parts

芯轴刀柄式铣刀 Arbour Mounted Cutter	锁紧螺钉 Clamping Screw	TORX PLUS®扳手 TORX PLUS® Wrench
383.0160..06	**5F.06T15P**	**T15PQ**
383.0160..08	**5F.08T20P**	**T20PQ**
383.0200...	**5.10T20P**	**T20PQ**

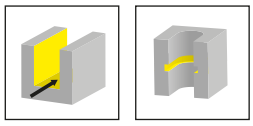

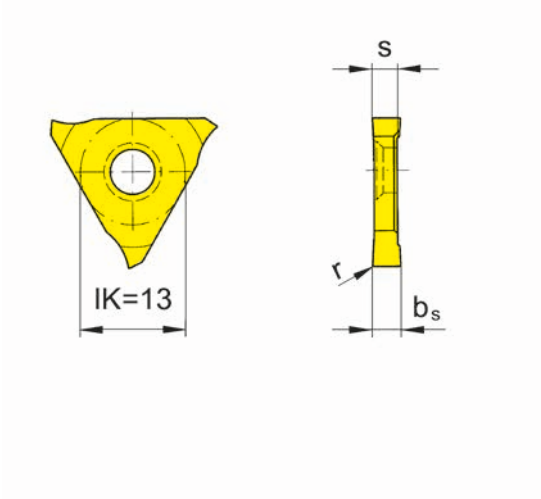

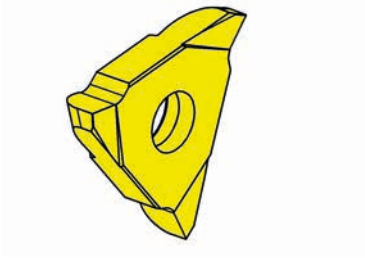

R=右手型-如图
R = right hand version shown

L=左手型
L = left hand version

▲ 库存
on stock

Δ 4周
4 weeks

硬质合金牌号
Carbide grades

产品型号 Part number	w	b_s	r	s	HIS		AS45	TI25	TN35
R314.6032.00	6	3.2	0.2	2.7	314027R		▲	▲	▲
R314.8043.00	8	4.3	0.2	4.1	314041R		▲	▲	▲
R314.0054.00	10/12/14	5.4	0.2	5.2	314052R		▲	▲	▲
L314.6032.00	6	3.2	0.2	2.7	314027L		▲	▲	▲
L314.8043.00	8	4.3	0.2	4.1	314041L		▲	▲	▲
L314.0054.00	14	5.4	0.2	5.2	314052L		▲	▲	▲
N314.0056.00	-	5.6	0.2	5.2	314052N		▲		▲
						P	●	●	●
						M	●	●	●
						K	●	●	●
						N	o	●	●
						S	●	●	●
						H	-	-	-

注意事项：
标准刀片**N314.0056.00**用于非标刀盘。
Note:
Standard insert N314.0056.00 for use with special cutters.

F

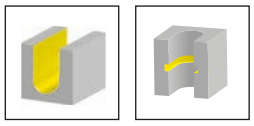

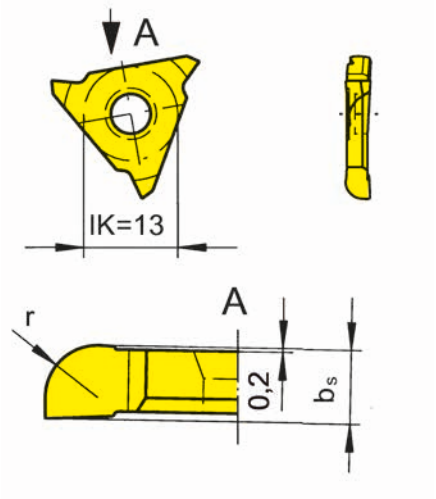

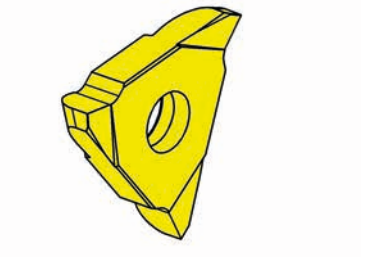

R=右手型-如图
R = right hand version shown

L=左手型
L = left hand version

▲ 库存
on stock

Δ 4周
4 weeks

硬质合金牌号
Carbide grades

产品型号 Part number	w	b_s	r	HIS	AS45	TI25
R314.0320.20	6	3.2	2	314027R	▲	▲
R314.0430.20	8	4.3	2	314041R	▲	▲
R314.0430.25	8	4.3	2.5	314041R	▲	▲
R314.0540.20	10	5.43	2	314052R	▲	▲
R314.0540.25	10	5.44	2.5	314052R	▲	▲
R314.0540.40	10	5.47	4	314052R	▲	▲
L314.0320.20	6	3.2	2	314027L	▲	▲
L314.0430.20	8	4.3	2	314041L	▲	▲
L314.0430.25	8	4.3	2.5	314041L	▲	▲
L314.0540.20	10	5.43	2	314052L	▲	▲
L314.0540.25	10	5.44	2.5	314052L	▲	▲
L314.0540.40	10	5.47	4	314052L	▲	▲
				P	●	●
				M	●	●
				K	●	●
				N	o	●
				S	●	●
				H	-	-

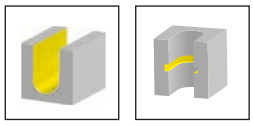

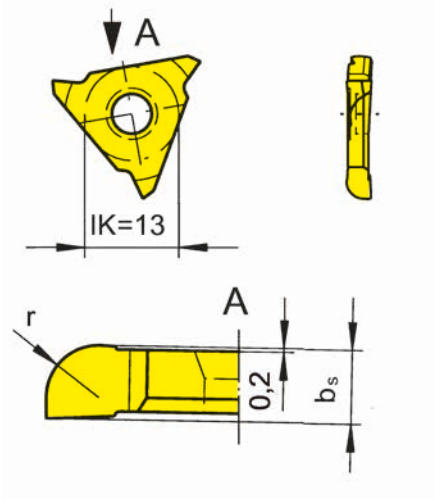

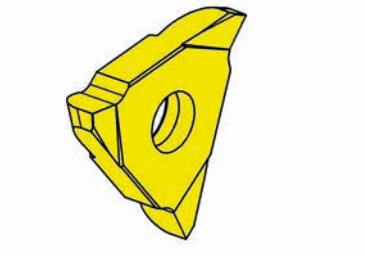

R=右手型-如图
R = right hand version shown

L=左手型
L = left hand version

▲ 库存
on stock

硬质合金牌号
Carbide grades

Δ 4周
4 weeks

产品型号 Part number	w	b_s	r	HIS		AS45	TI25
R314.0320.04	6	3.2	0.4	314027R		Δ	
R314.0320.05	6	3.2	0.5	314027R		▲	
R314.0320.10	6	3.2	1	314027R		▲	
R314.0320.15	6	3.2	1.5	314027R		▲	
R314.0320.16	6	3.2	1.6	314027R		Δ	
R314.0320.20	6	3.2	2	314027R		▲	▲
R314.0430.04	8	4.3	0.4	314041R		▲	
R314.0430.05	8	4.3	0.5	314041R		▲	
R314.0430.10	8	4.3	1	314041R		▲	
R314.0430.15	8	4.3	1.5	314041R		▲	
R314.0430.16	8	4.3	1.6	314041R		▲	
R314.0430.20	8	4.3	2	314041R		▲	▲
R314.0430.25	8	4.3	2.5	314041R		▲	▲
L314.0320.04	6	3.2	0.4	314027L		Δ	
L314.0320.05	6	3.2	0.5	314027L		▲	
L314.0320.10	6	3.2	1	314027L		▲	
L314.0320.15	6	3.2	1.5	314027L		▲	
L314.0320.16	6	3.2	1.6	314027L		Δ	
L314.0320.20	6	3.2	2	314027L		▲	▲
L314.0430.04	8	4.3	0.4	314041L		▲	
L314.0430.05	8	4.3	0.5	314041L		▲	
L314.0430.10	8	4.3	1	314041L		▲	
L314.0430.15	8	4.3	1.5	314041L		▲	
L314.0430.16	8	4.3	1.6	314041L		▲	
L314.0430.20	8	4.3	2	314041L		▲	▲
L314.0430.25	8	4.3	2.5	314041L		▲	▲
					P	●	●
					M	●	●
					K	●	●
					N	o	●
					S	●	●
					H	-	-

F

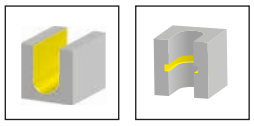

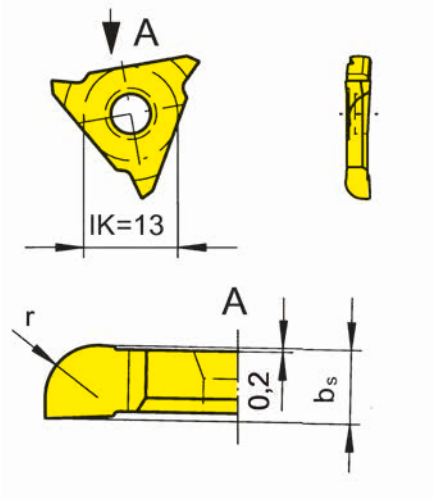

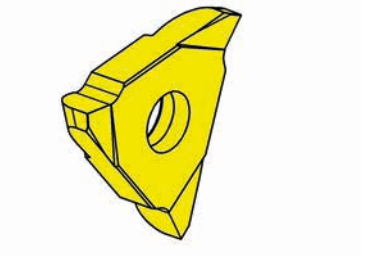

R=右手型-如图
R = right hand version shown

L=左手型
L = left hand version

▲ 库存
on stock

Δ 4周
4 weeks

硬质合金牌号
Carbide grades

产品型号 Part number	w	b_s	r	HIS	AS45	TI25
R314.0540.04	10	5.43	0.4	314052R	▲	
R314.0540.05	10	5.43	0.5	314052R	▲	
R314.0540.10	10	5.43	1	314052R	▲	
R314.0540.15	10	5.43	1.5	314052R	Δ	
R314.0540.16	10	5.43	1.6	314052R	Δ	
R314.0540.20	10	5.43	2	314052R	▲	▲
L314.0540.04	10	5.43	0.4	314052L	Δ	
L314.0540.05	10	5.43	0.5	314052L	Δ	
L314.0540.10	10	5.43	1	314052L	▲	
L314.0540.15	10	5.43	1.5	314052L	Δ	
L314.0540.16	10	5.43	1.6	314052L	Δ	
L314.0540.20	10	5.43	2	314052L	▲	▲
				P	●	●
				M	●	●
				K	●	●
				N	o	●
				S	●	●
				H	-	-

槽铣削
Groove Milling

盘铣刀
Disc Milling Cutter
M310

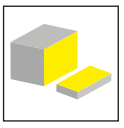

页/Page
264

螺纹锁紧铣刀
Screw-in cutter
M310

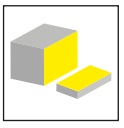

页/Page
265-266

芯轴刀柄式铣刀
Arbour Mounted Cutter
M310

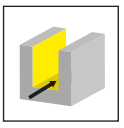

页/Page
267-270

可转位刀片
Indexable insert
S310

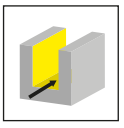

页/Page
271-273

F

M310

F

盘铣刀
螺纹锁紧铣刀
配合刀柄式铣刀

槽宽 3 - 5 mm
切削刃 Ø 50 - 200 mm

Disc Milling Cutter
Screw-in Cutter
Arbour Mounted Cutter

Width of slot 3 - 5 mm
Cutting edge Ø 50 - 200 mm

盘铣刀
Disc Milling Cutter

M310

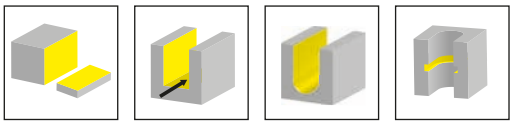

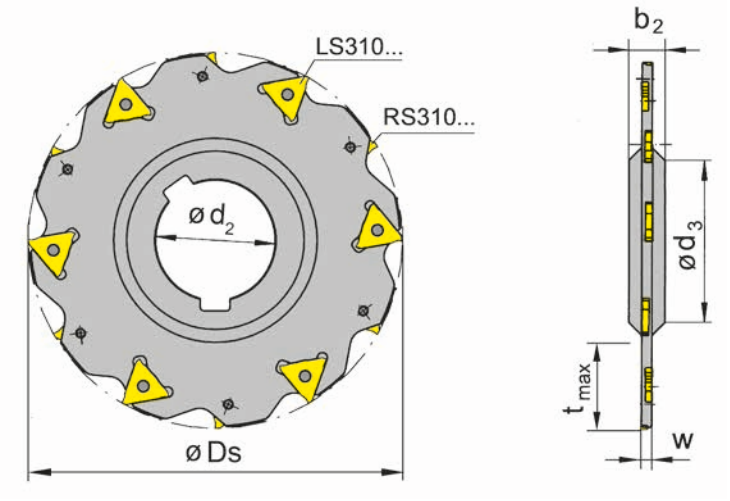

图示=右手型
Picture = right hand cutting version

产品型号 Part number	Z	Ds	t_{max}	d_2	b_2	d_3	w	右手型刀片 right hand insert	左手型刀片 left hand insert	HWS
M310.0080.27.03	8	80	18	27	8	40	3	4x RS310.3017...	4x LS310.3017...	310017R • 310017L
M310.0080.27.04	8	80	18	27	8	40	4	4x RS310.4023...	4x LS310.4023...	310023R • 310023L
M310.0080.27.05	8	80	18	27	8	40	5	4x RS310.5028...	4x LS310.5028...	310028R • 310028L
M310.0100.32.03	10	100	25	32	8	46	3	5x RS310.3017...	5x LS310.3017...	310017R • 310017L
M310.0100.32.04	10	100	25	32	8	46	4	5x RS310.4023...	5x LS310.4023...	310023R • 310023L
M310.0100.32.05	10	100	25	32	8	46	5	5x RS310.5028...	5x LS310.5028...	310028R • 310028L
M310.0125.40.03	12	125	32	40	10	54	3	6x RS310.3017...	6x LS310.3017...	310017R • 310017L
M310.0125.40.04	12	125	32	40	10	54	4	6x RS310.4023...	6x LS310.4023...	310023R • 310023L
M310.0125.40.05	12	125	32	40	10	54	5	6x RS310.5028...	6x LS310.5028...	310028R • 310028L
M310.0160.40.03	16	160	50	40	10	54	3	8x RS310.3017...	8x LS310.3017...	310017R • 310017L
M310.0160.40.04	16	160	50	40	10	54	4	8x RS310.4023...	8x LS310.4023...	310023R • 310023L
M310.0160.40.05	16	160	50	40	10	54	5	8x RS310.5028...	8x LS310.5028...	310028R • 310028L
M310.0200.40.04	20	200	70	40	10	54	4	10x RS310.4023...	10x LS310.4023...	310023R • 310023L
M310.0200.40.05	20	200	70	40	10	54	5	10x RS310.5028...	10x LS310.5028...	310028R • 310028L

孔(d2)带纵向DIN138标准键槽
Bore (d2) with longitudinal keyway to DIN 138

配件
Spare Parts

盘铣刀 Disc Milling Cutter	锁紧螺钉 Clamping Screw	TORX PLUS®扳手 TORX PLUS® Wrench
M310...03	**030.0324.T7P**	**T7PL**
M310...04	**030.3535.T8P**	**T8PL**
M310...05	**030.3543.T8P**	**T8PL**

螺纹锁紧铣刀
Screw-in cutter

M310

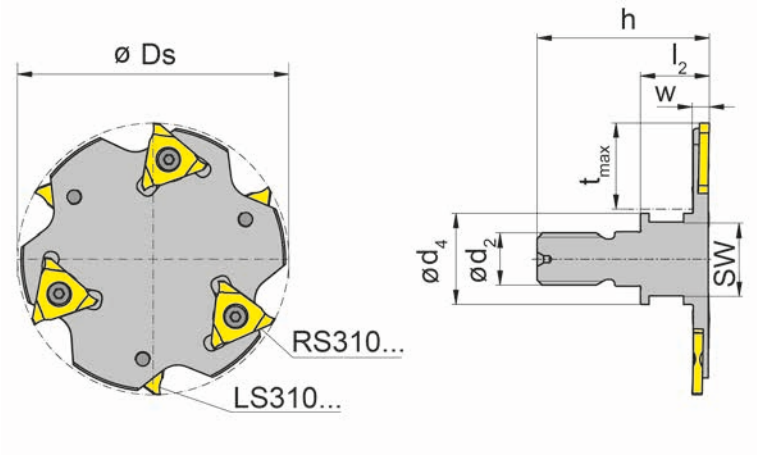

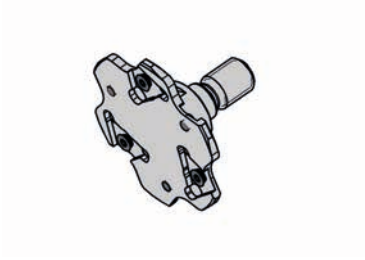

图示=右手型
Picture = right hand cutting version

产品型号 Part number	Z	Ds	h	l_2	d_2	d_4	SW	w	t_{max}	右手型刀片 right hand insert	左手型刀片 left hand insert	HWS	HMS
M310.0050.M10.03	6	50	33	13	M10	18	15	3	15	3x RS310.3017...	3x LS310.3017...	310017R • 310017L	10001
M310.0050.M10.04	6	50	34	14	M10	18	15	4	15	3x RS310.4023...	3x LS310.4023...	310023R • 310023L	10001
M310.0050.M10.05	6	50	35	15	M10	18	15	5	15	3x RS310.5028...	3x LS310.5028...	310028R • 310028L	10001
M310.0063.M12.03	6	63	39	15	M12	21	17	3	20	3x RS310.3017...	3x LS310.3017...	310017R • 310017L	12001
M310.0063.M12.04	6	63	40	16	M12	21	17	4	20	3x RS310.4023...	3x LS310.4023...	310023R • 310023L	12001
M310.0063.M12.05	6	63	41	17	M12	21	17	5	20	3x RS310.5028...	3x LS310.5028...	310028R • 310028L	12001

配件
Spare Parts

螺纹锁紧铣刀 Screw-in cutter	锁紧螺钉 Clamping Screw	TORX PLUS®扳手 TORX PLUS® Wrench
M310...03	**030.0324.T7P**	**T7PL**
M310...04	**030.3535.T8P**	**T8PL**
M310...05	**030.3543.T8P**	**T8PL**

F

螺纹锁紧铣刀
Screw-in cutter

M310

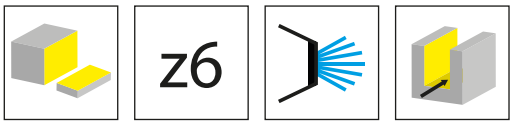

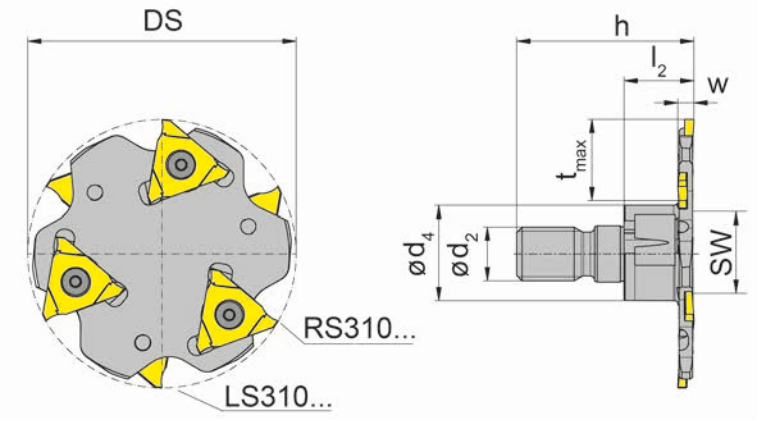

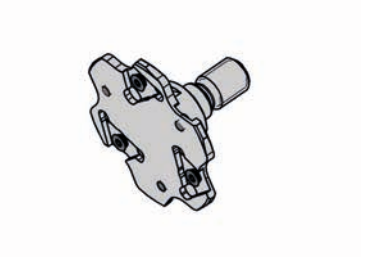

F

图示=右手型
Picture = right hand cutting version

产品型号 Part number	Z	Ds	h	l_2	d_2	d_4	SW	w	t_{max}	右手型刀片 right hand insert	左手型刀片 left hand insert	HWS	HMS
M310.0050.M10.03.IK	6	50	33	13	M10	18	15	3	15	3x RS310.3017...	3x LS310.3017...	310017R • 310017L	10001
M310.0050.M10.04.IK	6	50	34	14	M10	18	15	4	15	3x RS310.4023...	3x LS310.4023...	310023R • 310023L	10001
M310.0050.M10.05.IK	6	50	35	15	M10	18	15	5	15	3x RS310.5028...	3x LS310.5028...	310028R • 310028L	10001
M310.0063.M12.03.IK	6	63	39	15	M12	21	17	3	20	3x RS310.3017...	3x LS310.3017...	310017R • 310017L	12001
M310.0063.M12.04.IK	6	63	40	16	M12	21	17	4	20	3x RS310.4023...	3x LS310.4023...	310023R • 310023L	12001
M310.0063.M12.05.IK	6	63	41	17	M12	21	17	5	20	3x RS310.5028...	3x LS310.5028...	310028R • 310028L	12001

配件
Spare Parts

螺纹锁紧铣刀 Screw-in cutter	锁紧螺钉 Clamping Screw	TORX PLUS®扳手 TORX PLUS® Wrench
M310...03	**030.0324.T7P**	**T7PL**
M310...04	**030.3535.T8P**	**T8PL**
M310...05	**030.3543.T8P**	**T8PL**

芯轴刀柄式铣刀
Arbour Mounted Cutter

M310

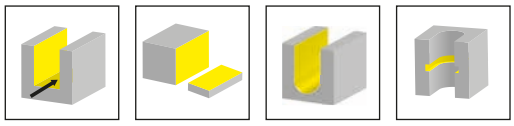

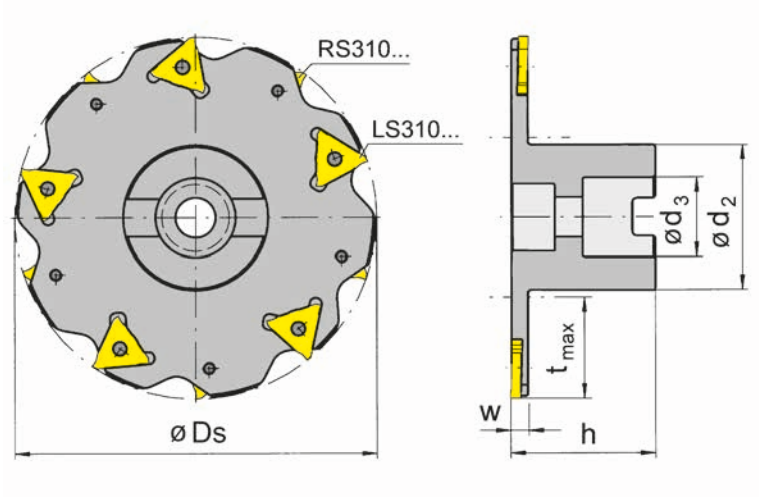

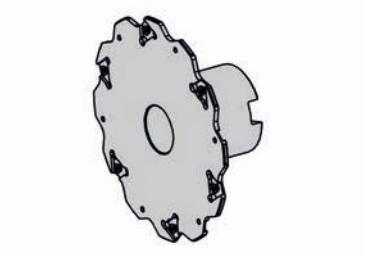

图示=右手型
Picture = right hand cutting version

产品型号 Part number	Z	Ds	t_{max}	h	d_2	d_3	w	右手型刀片 right hand insert	左手型刀片 left hand insert	HWS
M310.0080.22.03	8	80	23	40	33	22	3	4x RS310.3017...	4x LS310.3017...	310017R • 310017L
M310.1100.27.03	10	100	25	50	48	27	3	5x RS310.3017...	5x LS310.3017...	310017R • 310017L
M310.1125.27.03	12	125	35.7	50	48	27	3	6x RS310.3017...	6x LS310.3017...	310017R • 310017L
M310.1125.32.03	12	125	32.5	50	58	32	3	6x RS310.3017...	6x LS310.3017...	310017R • 310017L
M310.1125.40.03	12	125	26.5	50	70	40	3	6x RS310.3017...	6x LS310.3017...	310017R • 310017L
M310.1160.40.03	16	160	44	50	70	40	3	6x RS310.3017...	6x LS310.3017...	310017R • 310017L

孔(d3)带DIN138标准双键槽
Bore (d3) with cross keyway to DIN 138

F

配件
Spare Parts

芯轴刀柄式铣刀 Arbour Mounted Cutter	锁紧螺钉 Clamping Screw	TORX PLUS®扳手 TORX PLUS® Wrench
M310...	**030.0324.T7P**	**T7PL**

芯轴刀柄式铣刀
Arbour Mounted Cutter

M310

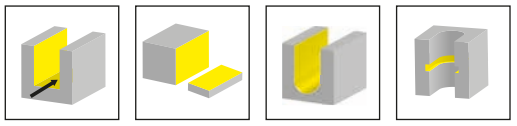

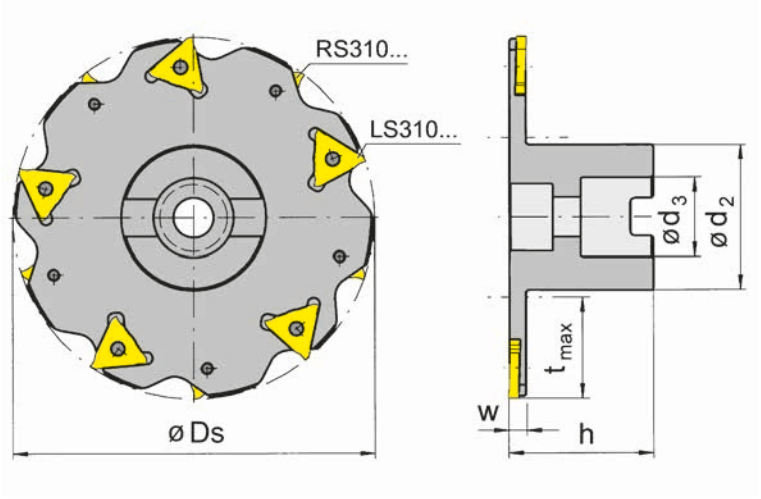

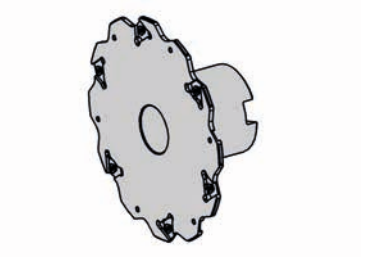

图示=右手型
Picture = right hand cutting version

产品型号 Part number	Z	Ds	t_{max}	h	d_2	d_3	w	右手型刀片 right hand insert	左手型刀片 left hand insert	HWS
M310.0080.22.04	8	80	23	40	33	22	4	4x RS310.4023...	4x LS310.4023...	310023R • 310023L
M310.0080.22.05	8	80	23	40	33	22	5	4x RS310.5028...	4x LS310.5028...	310028R • 310028L
M310.1100.27.04	10	100	25	50	48	27	4	5x RS310.4023...	5x LS310.4023...	310023R • 310023L
M310.1100.27.05	10	100	25	50	48	27	5	5x RS310.5028...	5x LS310.5028...	310028R • 310028L
M310.1125.27.04	12	125	37.5	50	48	27	4	6x RS310.4023...	6x LS310.4023...	310023R • 310023L
M310.1125.32.04	12	125	32	50	56	32	4	6x RS310.4023...	6x LS310.4023...	310023R • 310023L
M310.1125.40.04	12	125	26.5	50	70	40	4	6x RS310.4023...	6x LS310.4023...	310023R • 310023L
M310.1125.27.05	12	125	37.5	50	48	27	5	6x RS310.5028...	6x LS310.5028...	310028R • 310028L
M310.1125.32.05	12	125	32.5	50	56	32	5	6x RS310.5028...	6x LS310.5028...	310028R • 310028L
M310.1125.40.05	12	125	26.5	50	70	40	5	6x RS310.5028...	6x LS310.5028...	310028R • 310028L
M310.1160.40.04	16	160	44	50	70	40	4	8x RS310.4023...	8x LS310.4023...	310023R • 310023L
M310.1160.40.05	16	160	44	50	70	40	5	8x RS310.5028...	8x LS310.5028...	310028R • 310028L
M310.1200.40.04	20	200	64	50	70	40	4	10x RS310.4023...	10x LS310.4023...	310023R • 310023L
M310.1200.40.05	20	200	64	50	70	40	5	10x RS310.5028...	10x LS310.5028...	310028R • 310028L

孔(d3)带DIN138标准双键槽
Bore (d3) with cross keyway to DIN 138

配件
Spare Parts

芯轴刀柄式铣刀 Arbour Mounted Cutter	锁紧螺钉 Clamping Screw	TORX PLUS®扳手 TORX PLUS® Wrench
M310...04	**030.3535.T8P**	**T8PL**
M310...05	**030.3543.T8P**	**T8PL**

芯轴刀柄式铣刀
Arbour Mounted Cutter

M310

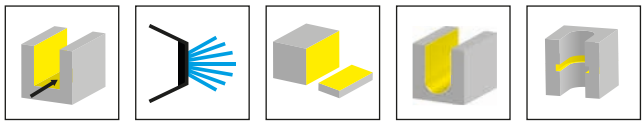

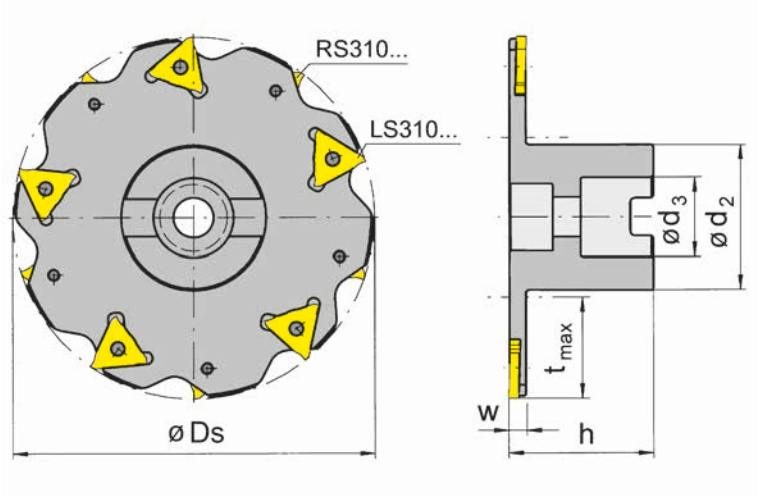

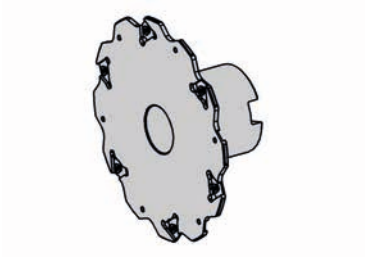

图示=右手型
Picture = right hand cutting version

产品型号 Part number	Z	Ds	t_{max}	h	d_2	d_3	w	右手型刀片 right hand insert	左手型刀片 left hand insert	HWS
M310.0063.16.03.IK	6	63	17.5	35	26	16	3	3x RS310.3017...	3x LS310.3017...	310017R • 310017L
M310.0063.16.04.IK	6	63	17.5	35	26	16	4	3x RS310.4023...	3x LS310.4023...	310023R • 310023L
M310.0063.16.05.IK	6	63	17.5	35	26	16	5	3x RS310.5028...	3x LS310.5028...	310028R • 310028L
M310.0080.16.03.IK	8	80	25	40	28	16	3	4x RS310.3017...	4x LS310.3017...	310017R • 310017L
M310.0080.16.04.IK	8	80	25	40	28	16	4	4x RS310.4023...	4x LS310.4023...	310023R • 310023L
M310.0080.16.05.IK	8	80	25	40	28	16	5	4x RS310.5028...	4x LS310.5028...	310028R • 310028L
M310.0080.22.03.IK	8	80	23	40	33	22	3	4x RS310.3017...	4x LS310.3017...	310017R • 310017L
M310.0080.22.04.IK	8	80	23	40	33	22	4	4x RS310.4023...	4x LS310.4023...	310023R • 310023L
M310.0080.22.05.IK	8	80	23	40	33	22	5	4x LS310.5028...	4x RS310.5028...	310028R • 310028L
M310.1100.27.03.IK	10	100	25	50	48	27	3	5x RS310.3017...	5x LS310.3017...	310017R • 310017L
M310.1100.27.04.IK	10	100	25	50	48	27	4	5x RS310.4023...	5x LS310.4023...	310023R • 310023L

孔(d3)带DIN138标准双键槽
Bore (d3) with cross keyway to DIN 138

配件
Spare Parts

芯轴刀柄式铣刀 Arbour Mounted Cutter	锁紧螺钉 Clamping Screw	TORX PLUS®扳手 TORX PLUS® Wrench
M310...03	**030.0324.T7P**	**T7PL**
M310...04	**030.3535.T8P**	**T8PL**
M310...05	**030.3543.T8P**	**T8PL**

F

芯轴刀柄式铣刀
Arbour Mounted Cutter

M310

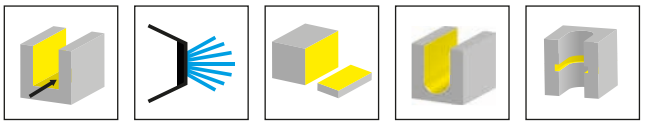

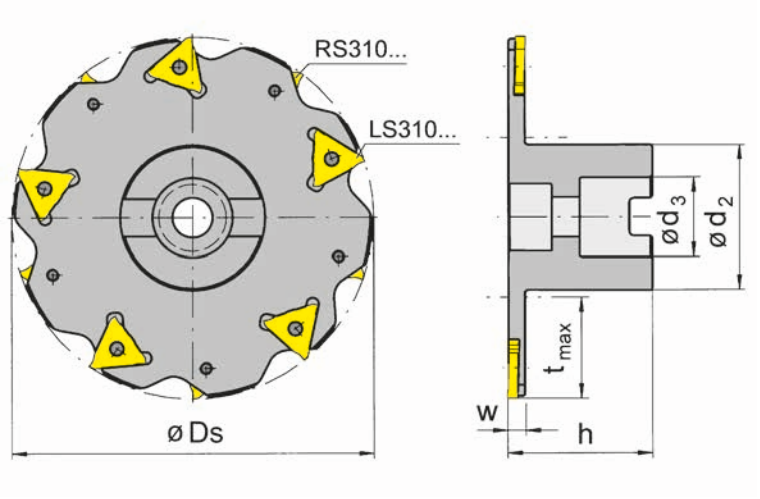

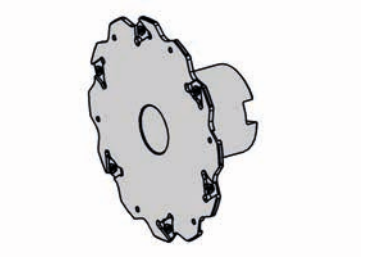

图示=右手型
Picture = right hand cutting version

产品型号 Part number	Z	Ds	t_{max}	h	d_2	d_3	w	右手型刀片 right hand insert	左手型刀片 left hand insert	HWS
M310.1125.27.03.IK	12	125	37.5	50	48	27	3	6x RS310.3017...	6x LS310.3017...	310017R • 310017L
M310.1125.27.04.IK	12	125	37.5	50	48	27	4	6x RS310.4023...	6x LS310.4023...	310023R • 310023L
M310.1125.27.05.IK	12	125	37.5	50	48	27	5	6x RS310.5028...	6x LS310.5028...	310028R • 310028L
M310.1125.32.03.IK	12	125	32	50	56	32	3	6x LS310.3017...	6x LS310.3017...	310017R • 310017L
M310.1125.32.04.IK	12	125	32	50	56	32	4	6x LS310.4023...	6x RS310.4023...	310023R • 310023L
M310.1125.32.05.IK	12	125	32	50	56	32	5	6x LS310.5028...	6x RS310.5028...	310028R • 310028L
M310.1125.40.05.IK	12	125	26.5	50	70	40	5	6x RS310.5028...	6x LS310.5028...	310028R • 310028L
M310.1160.40.03.IK	16	160	44	50	70	40	3	8x RS310.3017...	8x LS310.3017...	310017R • 310017L
M310.1160.40.04.IK	16	160	44	50	70	40	4	8x RS310.4023...	8x LS310.4023...	310023R • 310023L
M310.1160.40.05.IK	16	160	44	50	70	40	5	8x LS310.5028...	3x RS310.5028...	310028R • 310028L
M310.1200.40.04.IK	20	200	64	50	70	40	4	10x LS310.4023...	10x RS310.4023...	310023R • 310023L
M310.1200.40.05.IK	20	200	64	50	70	40	5	10x LS310.5028...	10x RS310.5028...	310028R • 310028L

孔(d3)带DIN138标准双键槽
Bore (d3) with cross keyway to DIN 138

配件
Spare Parts

芯轴刀柄式铣刀 Arbour Mounted Cutter	锁紧螺钉 Clamping Screw	TORX PLUS®扳手 TORX PLUS® Wrench
M310...03	**030.0324.T7P**	**T7PL**
M310...04	**030.3535.T8P**	**T8PL**
M310...05	**030.3543.T8P**	**T8PL**

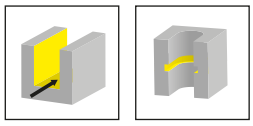

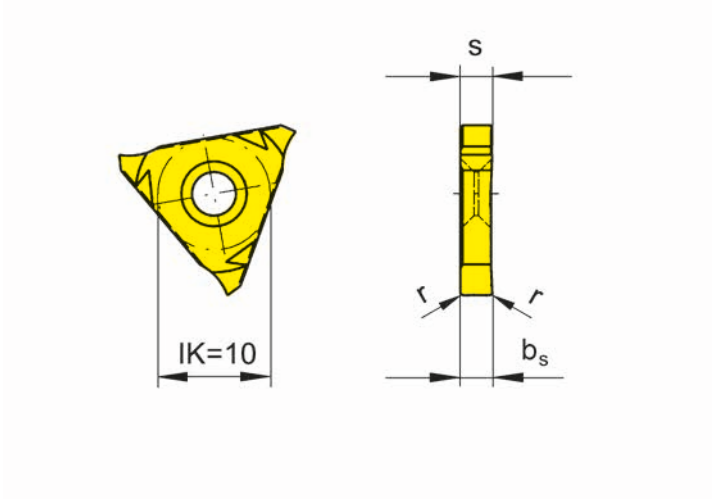

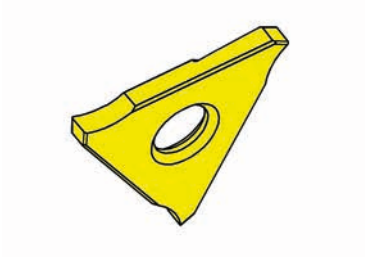

R=右手型-如图
R = right hand version shown

L=左手型
L = left hand version

硬质合金牌号
Carbide grades

▲ 库存
on stock

Δ 4周
4 weeks

产品型号 Part number	w	r	b_s	s	HIS	AS45	DD25	IG35	TF45	TN35
RS310.3017.00	3	0.15	1.7	1.6	310017R	▲	▲	▲		
RS310.3118.00	3.175	0.15	1.8	1.6	310017R	▲				
RS310.4023.00	4	0.2	2.3	2.2	310023R	▲	▲	▲	▲	▲
RS310.5028.00	5	0.2	2.8	2.7	310028R	▲	▲	▲	▲	▲
LS310.3017.00	3	0.15	1.7	1.6	310017L	▲	▲	▲		
LS310.3118.00	3.175	0.15	1.8	1.6	310017L	▲				
LS310.4023.00	4	0.2	2.3	2.2	310023L	▲	▲	▲	▲	▲
LS310.5028.00	5	0.2	2.8	2.7	310028L	▲	▲	▲	▲	▲
P						●	-	-	●	●
M						●	-	●	●	●
K						●	-	-	●	●
N						o	●	-	●	●
S						●	o	●	●	●
H						-	-	-	-	-

F

可转位刀片
Indexable insert

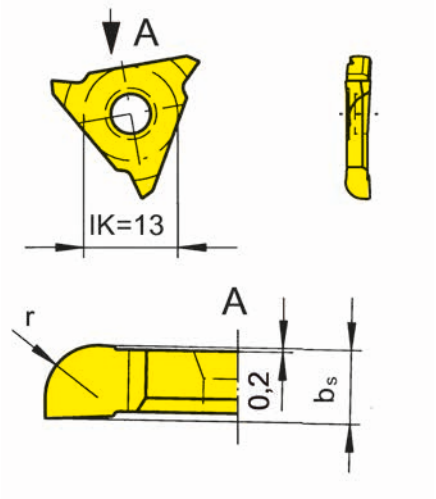

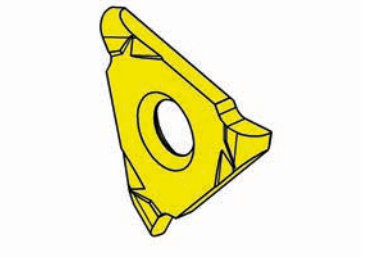

R=右手型-如图
R = right hand version shown

L=左手型
L = left hand version

硬质合金牌号
Carbide grades

▲ 库存
on stock

Δ 4周
4 weeks

产品型号 Part number	w	r	b_s	s	HIS		AS45
RS310.3017.04	3	0.4	1.7	1.57	310017R		▲
RS310.3017.05	3	0.5	1.7	1.57	310017R		▲
RS310.3017.10	3	1	1.7	1.57	310017R		▲
RS310.3017.15	3	1.5	1.7	1.57	310017R		▲
RS310.4023.04	4	0.4	2.3	2.17	310023R		▲
RS310.4023.05	4	0.5	2.3	2.17	310023R		Δ
RS310.4023.10	4	1	2.3	2.17	310023R		▲
RS310.4023.15	4	1.5	2.3	2.17	310023R		▲
RS310.4023.16	4	1.6	2.3	2.17	310023R		▲
RS310.4023.20	4	2	2.3	2.17	310023R		▲
LS310.3017.04	3	0.4	1.7	1.57	310017L		▲
LS310.3017.05	3	0.5	1.7	1.57	310017L		▲
LS310.3017.10	3	1	1.7	1.57	310017L		▲
LS310.3017.15	3	1.5	1.7	1.57	310017L		▲
LS310.4023.04	4	0.4	2.3	2.17	310023L		▲
LS310.4023.05	4	0.5	2.3	2.17	310023L		Δ
LS310.4023.10	4	1	2.3	2.17	310023L		▲
LS310.4023.15	4	1.5	2.3	2.17	310023L		▲
LS310.4023.16	4	1.6	2.3	2.17	310023L		▲
LS310.4023.20	4	2	2.3	2.17	310023L		▲

P	●
M	●
K	●
N	o
S	●
H	-

可转位刀片
Indexable insert

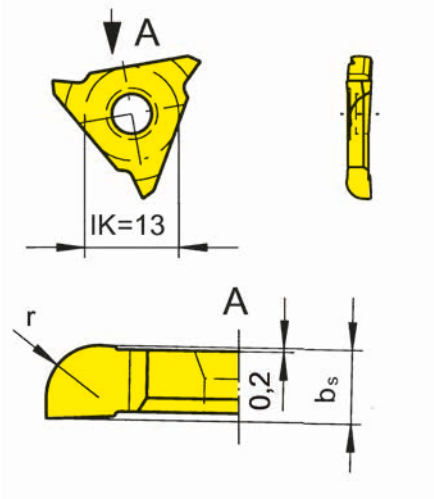

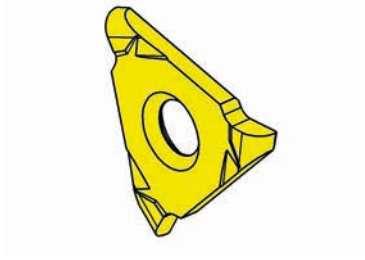

R=右手型-如图
R = right hand version shown

L=左手型
L = left hand version

硬质合金牌号
Carbide grades

▲ 库存
on stock

Δ 4周
4 weeks

F

产品型号 Part number	w	r	b_s	s	HIS		AS45
RS310.5028.04	5	0.4	2.68	2.62	310028R		Δ
RS310.5028.05	5	0.5	2.68	2.62	310028R		▲
RS310.5028.10	5	1	2.68	2.62	310028R		▲
RS310.5028.15	5	1.5	2.68	2.62	310028R		▲
RS310.5028.16	5	1.6	2.68	2.62	310028R		▲
RS310.5028.20	5	2	2.68	2.62	310028R		▲
LS310.5028.04	5	0.4	2.68	2.62	310028L		Δ
LS310.5028.05	5	0.5	2.68	2.62	310028L		▲
LS310.5028.10	5	1	2.68	2.62	310028L		▲
LS310.5028.15	5	1.5	2.68	2.62	310028L		▲
LS310.5028.16	5	1.6	2.68	2.62	310028L		▲
LS310.5028.20	5	2	2.68	2.62	310028L		▲
						P	●
						M	●
						K	●
						N	o
						S	●
						H	-

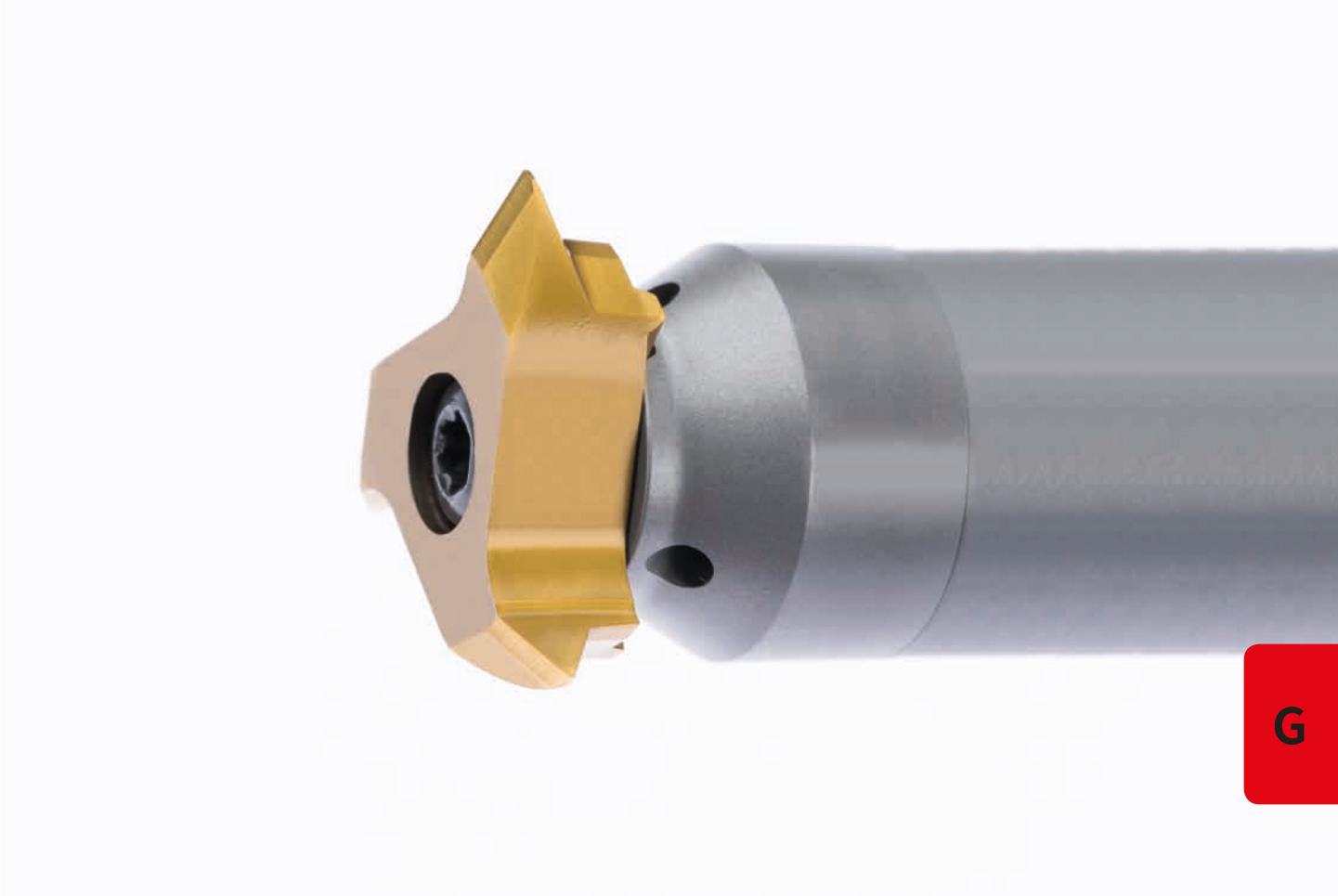

G

系列/System	页/Page
M304	276
M306	284
M308	296
M311	306
M313	316
M328	326
M332	336
M275	342
380	384

螺纹铣削(内圆)
Thread Milling (internal)

概述
Overview
页/Page
278

铣刀杆
Milling shank
M304

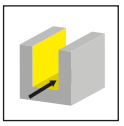

页/Page
279

刀片
Insert
304

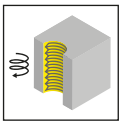

页/Page
280-282

G

注意:
公称直径总是螺纹上最大的直径。通常，这描述以螺纹尺寸为基础。
例如 M12 x 1 -> 公称直径 12
如果工件的公称直径小于推荐值，铣刀的过切会产生轮廓误差。

Attention:
The nominal diameter is always the largest Ø on the thread. As a rule, the designation is based on the size of the thread.
Example: M12 x 1 -> nominal diameter 12

Recutting of the milling tool will create profile errors if the nominal diameter of the component will be smaller than recommended.

M304

G

螺纹铣刀(圆弧插补铣削)

切削刃自 Ø 7.7 mm

Thread Milling Cutter (by circular interpolation)

from Cutting edge Ø 7,7 mm

非全牙型，米制 型号 304
Partial profile, metric type 304

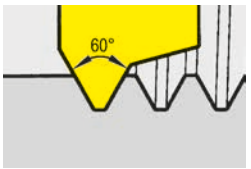

螺距/ Pitch P	0,5	0,75	1,0	1,25	1,5
	公称直径 / Nominal diameter				
型号 / type **304** / Ds 7,7					
304.0515.01	≥ 9	≥ 9	≥ 9	≥ 10	≥ 10

全牙型，米制螺纹 型号 304
Full profile, metric type 304

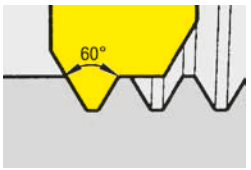

螺距/ Pitch P	1,5
	公称直径 Nominal diameter
型号 / type **304** / Ds 7,7	
304.0815.02	≥ 12

G

全牙型，惠氏螺纹 型号 304
Full profile, Whitworth type 304

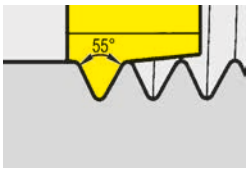

每英寸牙数/ tpi	19	14	11
	螺纹 / Thread		
型号 / type **304** / Ds 7,7			
304.05519.02	G¼“		

铣刀杆
Milling shank

M304

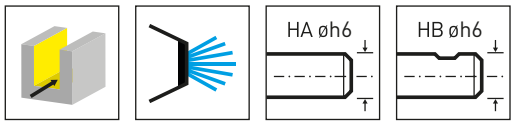

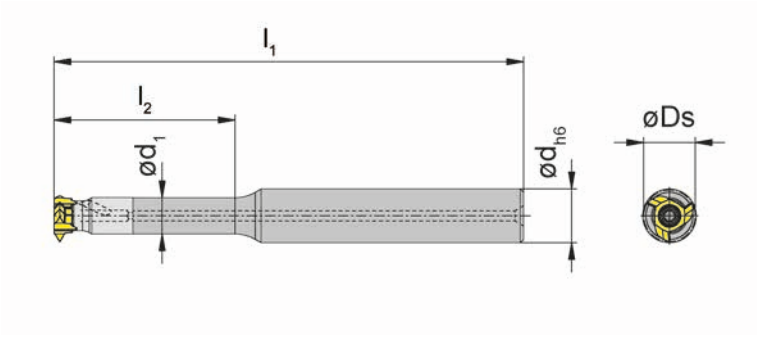

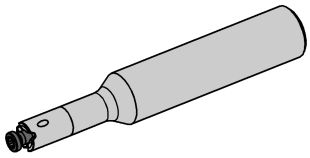

图示=右手型
Picture = right hand cutting version

产品型号 Part number	d	l_1	l_2	d_1	形式 Form	HWS
M304.0508.02A	8	63	20	5.4	A	304044R
M304.0508.03A	8	70	27	5.4	A	304044R
M304.0508.02B	8	63	20	5.4	B	304044R
M304.0508.03B	8	70	27	5.4	B	304044R

Ds见刀片
Ds see inserts

G

配件
Spare Parts

铣刀杆 Milling shank	锁紧螺钉 Clamping Screw	TORX PLUS®扳手 TORX PLUS® Wrench
M304...	**1.8.4T6EP**	**T6PL**

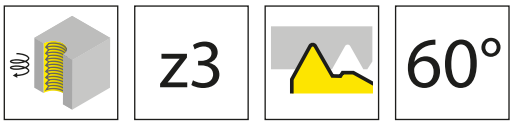

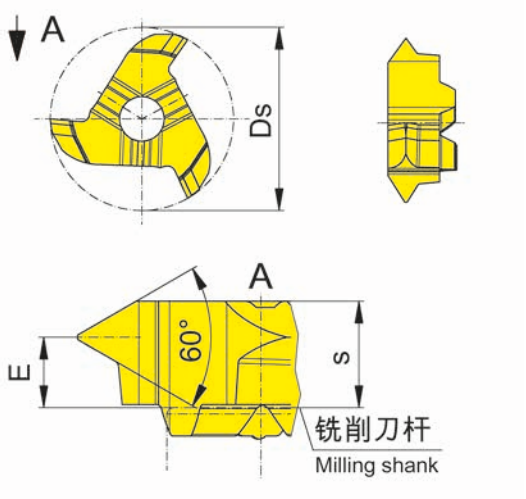

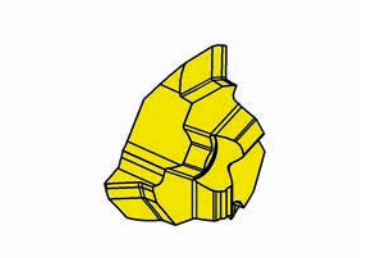

图示=右手型
Picture = right hand cutting version

硬质合金牌号
Carbide grades

▲ 库存
on stock

Δ 4周
4 weeks

产品型号 Part number	P	P_{max}	E	s	Ds	HIS		AS45
304.0515.01	0.5	1.5	1.9	2.75	7.7	304044R		▲
							P	●
							M	●
							K	●
							N	o
							S	●
							H	-

G

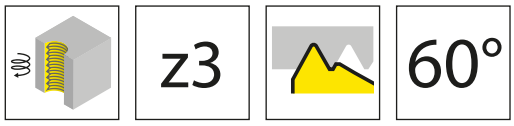

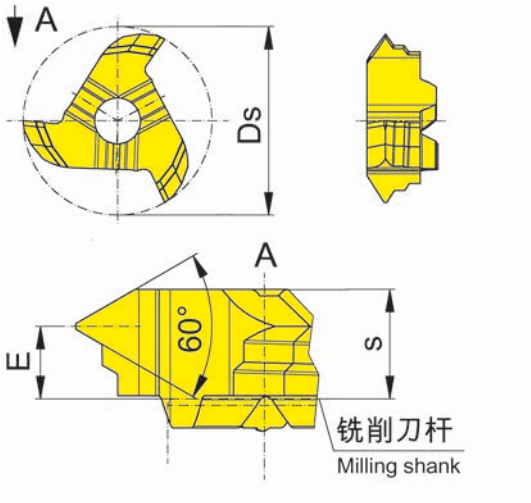

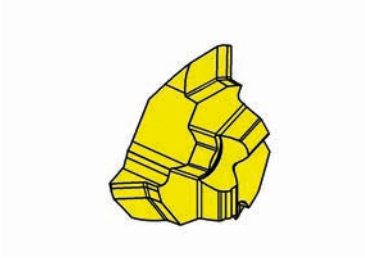

图示=右手型
Picture = right hand cutting version

硬质合金牌号
Carbide grades

▲ 库存
on stock

Δ 4周
4 weeks

产品型号 Part number	P	E	s	Ds	HIS		AS45
304.0815.02	1.5	2	2.75	7.7	304044R		▲
						P	●
						M	●
						K	●
						N	o
						S	●
						H	-

G

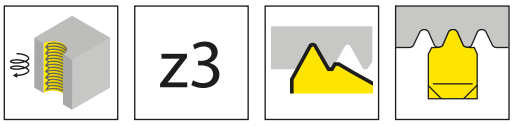

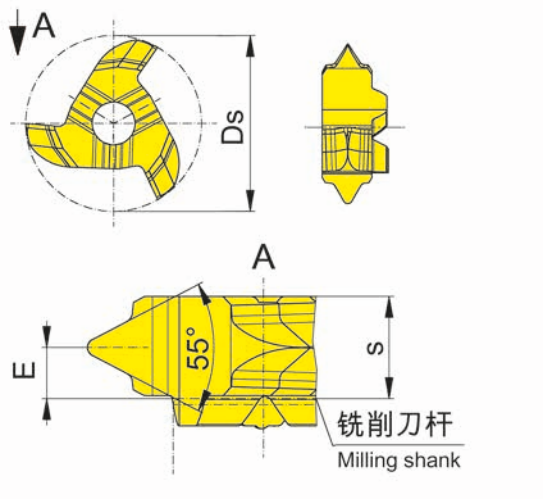

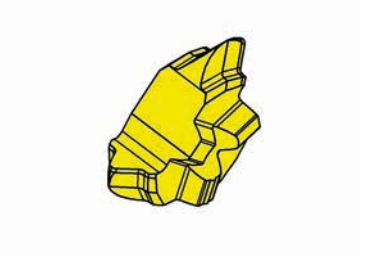

图示=右手型
Picture = right hand cutting version

硬质合金牌号
Carbide grades

▲ 库存
on stock

Δ 4周
4 weeks

产品型号 Part number	TPI	E	s	Ds	HIS		AS45
304.5519.02	19	1.5	2.75	7.7	304044R		▲
						P	●
						M	●
						K	●
						N	o
						S	●
						H	-

G

螺纹铣削(内圆)
Thread Milling (internal)

概述
Overview
页/Page
286

铣刀杆
Milling shank
M306

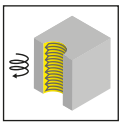

页/Page
287

刀片
Insert
108/306/606

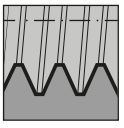

页/Page
288

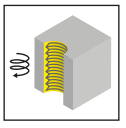

页/Page
289-294

G

注意:
公称直径总是螺纹上最大的直径。通常，这描述以螺纹尺寸为基础。
例如 M12 x 1 -> 公称直径 12
如果工件的公称直径小于推荐值，铣刀的过切会产生轮廓误差。

Attention:
The nominal diameter is always the largest Ø on the thread. As a rule, the designation is based on the size of the thread.
Example: M12 x 1 -> nominal diameter 12

Recutting of the milling tool will create profile errors if the nominal diameter of the component will be smaller than recommended.

M306

G

螺纹铣刀(圆弧插补铣削)

切削刃自 Ø 9.6 mm

Thread Milling Cutter (by circular interpolation)

from Cutting edge Ø 9,6 mm

非全牙型，米制 型号 108, 306, 606
Partial profile, metric type 108, 306, 606

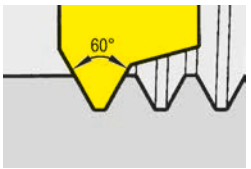

螺距/ Pitch P	0,5	0,75	1,0	1,25	1,5	1,75	2,0	2,5	3,0
	公称直径 / Nominal diameter								
型号 / type **108** / Ds 9,6									
R/L 108.0205.01	≥ 12	≥ 12							
R/L108.0510.01			≥ 14	≥ 14					
R/L108.0815.01					≥ 16	≥ 16			
型号 / type **306** / Ds 10,0									
306.0515.01	≥ 12	≥ 12	≥ 13	≥ 13	≥ 14				
306.1020.01							≥ 16		
型号 / type **306** / Ds 11,7									
306.0815.01					≥ 18				
306.0720.01			≥ 16	≥ 16	≥ 16	≥ 16	≥ 16		
306.2530.01								≥ 20	≥ 20
型号 / type **606** / Ds 10,0									
606.0515.01	≥ 12	≥ 12	≥13	≥ 13	≥ 14				
型号 / type **606** / Ds 11,7									
606.0720.01			≥ 16	≥ 16	≥ 16	≥ 16	≥ 16		

G

全牙型，米制螺纹 型号 306, 606
Full profile, metric type 306

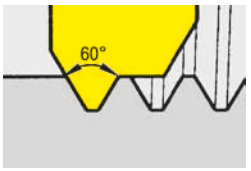

螺距/ Pitch P	1,5	2,0
	公称直径 Nominal diameter	
型号 / type **306** / Ds 11,7		
306.0815.02	≥ 22	
型号 / type **306** / Ds 10,0		
306.1020.02		≥ 24

螺距/ Pitch P	1,5
	公称直径 Nominal diameter
型号 / type **606** / Ds 11,7	
606.0815.02	≥ 22

全牙型，惠氏螺纹 型号 306, 606
Full profile, Whitworth type 306, 606

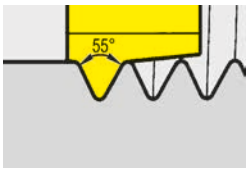

每英寸牙数 / tpi	19	14	11
	螺纹 / Thread		
型号 / type **306** / Ds 9,7			
306.5519.10.02	G¼"		
型号 / type **306** / Ds 11,7			
306.5519.02	G⅜"		
306.5514.02		G½"	
306.5511.02			G1"
型号 / type **606** / Ds 9,7			
606.5519.10.02	G¼"		
型号 / type **606** / Ds 11,7			
606.5519.02	G⅜"		
606.5514.02		G½"	

铣刀杆
Milling shank

M306

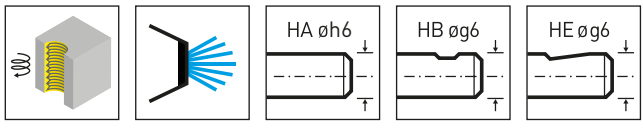

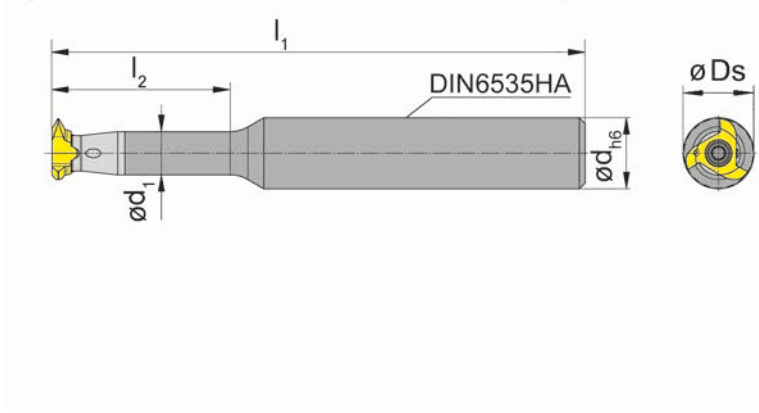

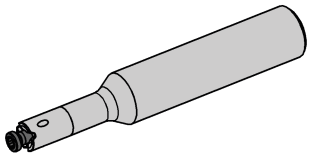

图示=右手型
Picture = right hand cutting version

产品型号 Part number	d	l_1	l_2	d_1	形式 Form	HWS
M306.0712.02A	12	90	30	7.3	A	306060R • 306060L
M306.0716.01A	16	100	25	7.3	A	306060R • 306060L
M306.0716.02A	16	110	35	7.3	A	306060R • 306060L
M306.0712.02B	12	90	30	7.3	B	306060R • 306060L
M306.0716.01B	16	100	25	7.3	B	306060R • 306060L
M306.0716.02B	16	110	35	7.3	B	306060R • 306060L
M306.0712.02E	12	90	30	7.3	E	306060R • 306060L
M306.0716.01E	16	100	25	7.3	E	306060R • 306060L
M306.0716.02E	16	110	35	7.3	E	306060R • 306060L

Ds见刀片
Ds see inserts

G

配件
Spare Parts

铣刀杆 Milling shank	**锁紧螺钉** Clamping Screw	**TORX PLUS®扳手** TORX PLUS® Wrench
M306...	**2.6.5T8EP**	**T8PL**

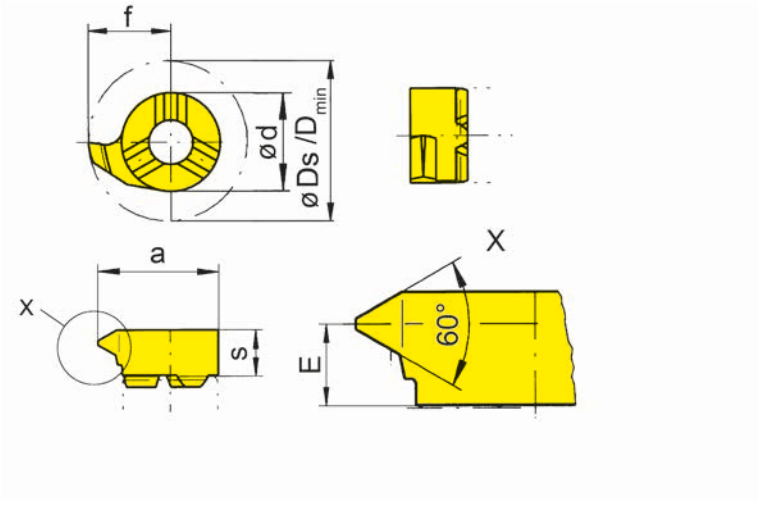

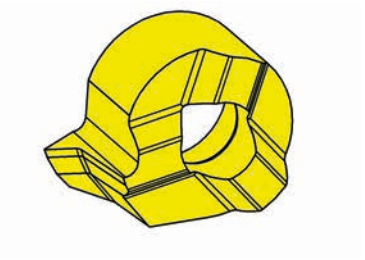

R=右手型-如图
R = right hand version shown

L=左手型
L = left hand version

硬质合金牌号
Carbide grades

▲ 库存
on stock

Δ 4周
4 weeks

产品型号 Part number	P	P_{max}	E	f	a	d	s	D_{min}	Ds	HIS	MG12	EG55	TH35	TI25	TN35
R108.0205.01	0.5	0.75	2.8	4.8	7.8	6	3.6	8	9.6	306060R	▲	▲	▲		▲
R108.0815.01	1.5	1.75	2.6	4.8	7.8	6	3.6	8	9.6	306060R	▲	▲	▲		▲
R108.0510.01	1	1.25	2.8	4.8	7.8	6	3.6	8	9.6	306060R	▲	▲	▲	▲	▲
L108.0205.01	0.5	0.75	2.8	4.8	7.8	6	3.6	8	9.6	306060L	Δ	▲	▲		▲
L108.0815.01	1.5	1.75	2.6	4.8	7.8	6	3.6	8	9.6	306060L	Δ	▲	▲		▲
L108.0510.01	1	1.25	2.8	4.8	7.8	6	3.6	8	9.6	306060L	Δ	▲	▲	▲	▲
											P o	●	●	●	●
											M -	o	●	●	●
											K -	o	●	●	●
											N -	-	●	●	●
											S -	-	●	●	●
											H -	-	-	-	-

G

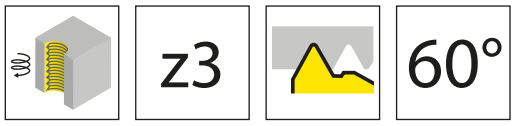

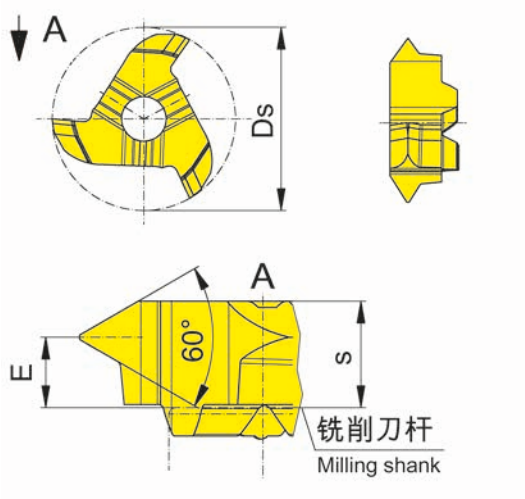

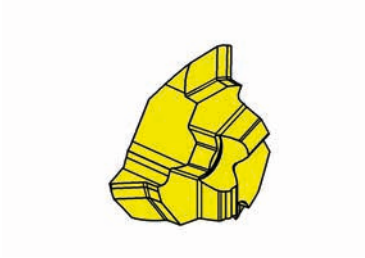

图示=右手型
Picture = right hand cutting version

硬质合金牌号
Carbide grades

▲ 库存
on stock

Δ 4周
4 weeks

产品型号 Part number	P	P_{max}	E	s	Ds	HIS	AS45	TA45	TF45	TI25	TN35
306.0515.01	0.5	1.5	2.3	3.4	10	306060R	▲	▲			
306.0720.01	1	2	1.95	3.4	11.7	306060R	▲		▲	▲	▲
306.0815.01	1.5	1.5	2.25	3.4	11.7	306060R	▲		Δ	▲	▲
306.1020.01	2	2	2.2	3.4	10	306060R	▲			▲	
306.2530.01	2.5	3	1.7	3.4	11.7	306060R	▲		▲	▲	▲
						P	●	●	●	●	●
						M	●	●	●	●	●
						K	●	●	●	●	●
						N	o	●	●	●	●
						S	●	●	●	●	●
						H	-	-	-	-	-

G

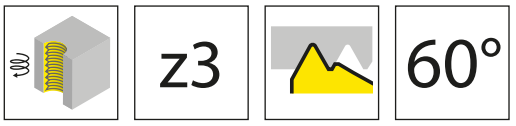

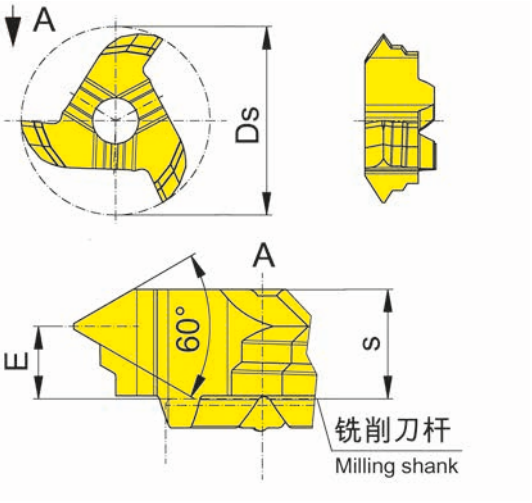

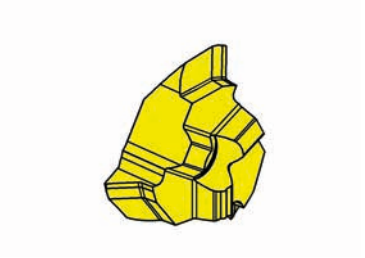

图示=右手型
Picture = right hand cutting version

硬质合金牌号
Carbide grades

▲ 库存
on stock

Δ 4周
4 weeks

产品型号 Part number	P	E	s	Ds	HIS		AS45	TA45
306.0510.02	1	2.5	3.4	11.7	306060R		▲	
306.0815.02	1.5	2.25	3.4	11.7	306060R		▲	▲
306.1020.02	2	2.2	3.4	10	306060R		▲	▲
						P	●	●
						M	●	●
						K	●	●
						N	o	●
						S	●	●
						H	-	-

G

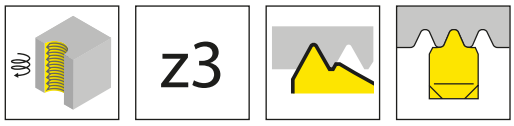

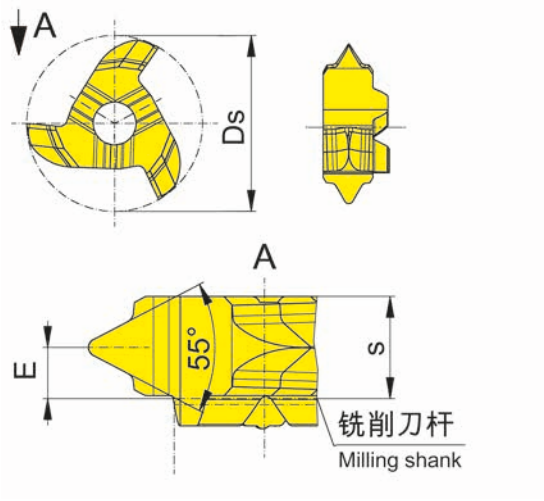

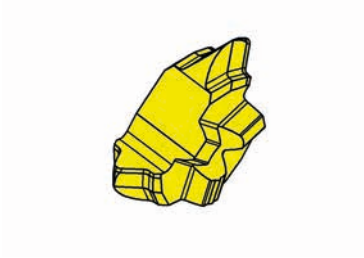

图示=右手型
Picture = right hand cutting version

硬质合金牌号
Carbide grades

▲ 库存
on stock

Δ 4周
4 weeks

产品型号 Part number	TPI	E	s	Ds	HIS		AS45	TA45	TF45	TI25	TN35
306.5511.02	11	1.7	3.4	11.7	306060R		▲	▲		Δ	
306.5514.02	14	2	3.4	11.7	306060R		▲	▲			Δ
306.5519.02	19	2.2	3.4	11.7	306060R		▲	▲			
306.5519.10.02	19	2.2	3.4	9.7	306060R		▲	▲			
						P	●	●	●	●	●
						M	●	●	●	●	●
						K	●	●	●	●	●
						N	o	●	●	●	●
						S	●	●	●	●	●
						H	-	-	-	-	-

G

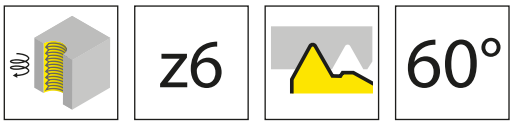

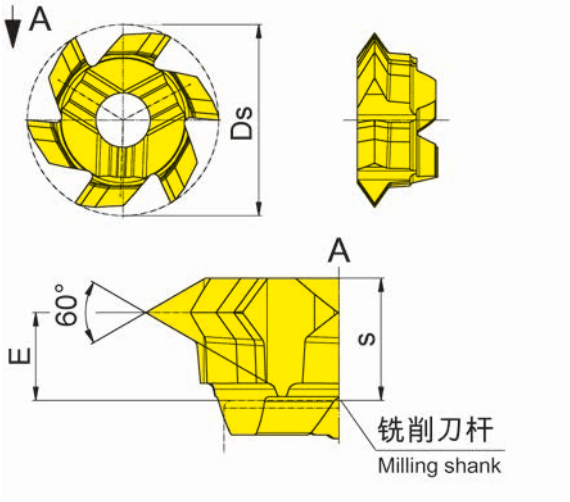

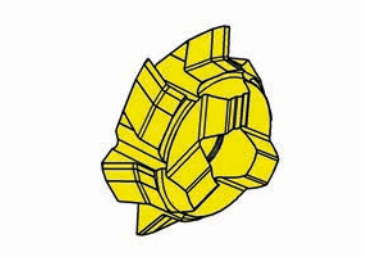

图示=右手型
Picture = right hand cutting version

硬质合金牌号
Carbide grades

▲ 库存
on stock

Δ 4周
4 weeks

产品型号 Part number	P	P_{max}	E	s	Ds	HIS		AS45	TA45
606.0515.01	0.5	1.5	2.3	3.15	10	306060R		▲	▲
606.0720.01	1	2	1.95	3.15	11.7	306060R		▲	▲
							P	●	●
							M	●	●
							K	●	●
							N	o	●
							S	●	●
							H	-	-

G

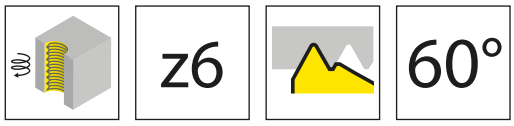

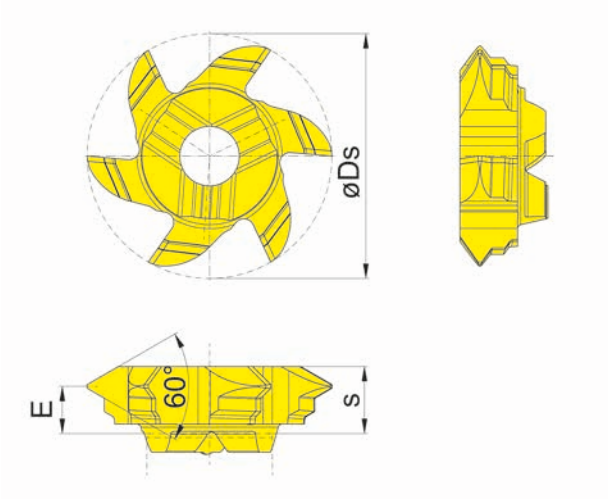

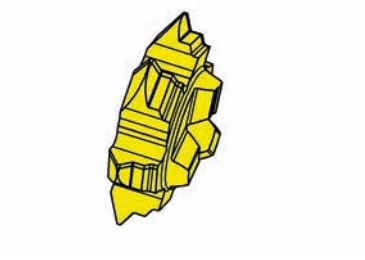

图示=右手型
Picture = right hand cutting version

硬质合金牌号
Carbide grades

▲ 库存
on stock

Δ 4周
4 weeks

产品型号 Part number	P	E	s	Ds	HIS		AS45	TA45
606.0510.02	1	2.5	3.2	11.7	306060R		▲	▲
606.0815.02	1.5	2.25	3.2	11.7	306060R		▲	
						P	●	●
						M	●	●
						K	●	●
						N	o	●
						S	●	●
						H	-	-

G

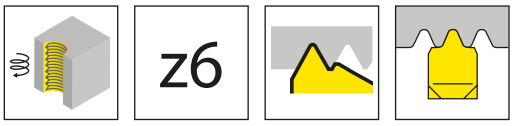

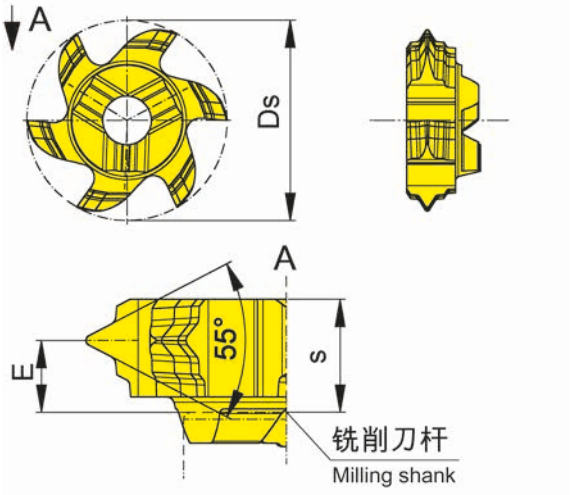

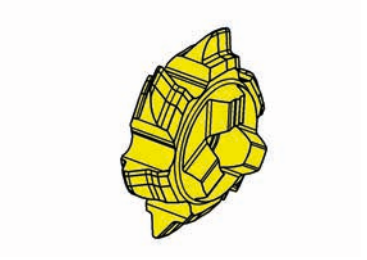

图示=右手型
Picture = right hand cutting version

硬质合金牌号
Carbide grades

▲ 库存
on stock

Δ 4周
4 weeks

产品型号 Part number	TPI	E	s	Ds	HIS		AS45	TA45	TI25
606.5519.10.02	19	2.1	3.3	9.7	306060R		▲	▲	Δ
606.5514.02	14	2	3.3	11.7	306060R		▲	▲	
606.5519.02	19	2.1	3.3	11.7	306060R		▲	▲	Δ
						P	●	●	●
						M	●	●	●
						K	●	●	●
						N	o	●	●
						S	●	●	●
						H	-	-	-

G

螺纹铣削(内圆)
Thread Milling (internal)

概述
Overview
页/Page
298

铣刀杆
Milling shank
M308

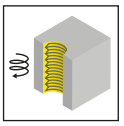

页/Page
299

刀片
Insert
111/308/608

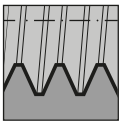

页/Page
300-301

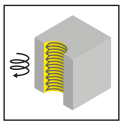

页/Page
302-305

G

注意:
公称直径总是螺纹上最大的直径。通常，这描述以螺纹尺寸为基础。
例如 M12 x 1 -> 公称直径 12
如果工件的公称直径小于推荐值，铣刀的过切会产生轮廓误差。

Attention:
The nominal diameter is always the largest Ø on the thread. As a rule, the designation is based on the size of the thread.
Example: M12 x 1 -> nominal diameter 12

Recutting of the milling tool will create profile errors if the nominal diameter of the component will be smaller than recommended.

M308

G

螺纹铣刀（圆弧插补铣削）

切削刃自 Ø 13.2 mm

Thread Milling Cutter (by circular interpolation)

from cutting edge Ø 13,2 mm

非全牙型，米制 型号 111, 308
Partial profile, metric type 111, 308

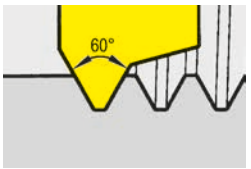

螺距 / Pitch P	0,5	0,75	1,0	1,25	1,5	1,75	2,0	2,5	3,0
	公称直径 / Nominal diameter								
型号 / type **111** / Ds 13,4									
R/L111.0205.01	≥ 18	≥16							
R/L111.0510.01			≥18	≥18					
R/L111.0815.01					≥ 20	≥ 20			
R/L111.1020.01							≥ 22		
R/L111.1325.01								≥ 24	
型号 / type 308 / Ds 13,2									
308.1325.01								≥ 18	
型号 / type 308 / Ds 15,7									
308.0815.01					≥ 22				
308.0720.01			≥ 20	≥ 20	≥ 20	≥ 20	≥ 20		
308.2530.01								≥ 24	≥24

非全牙型，米制 型号 608
Partial profile, metric type 608

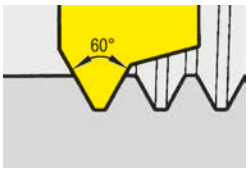

螺距 / Pitch P	0,5	0,75	1,0	1,25	1,5	1,75	2,0	2,5	3,0
	公称直径 / Nominal diameter								
型号 / type **608** / Ds 13,2									
608.1325.01								≥ 18	
型号 / type **608** / Ds 15,7									
608.0720.01			≥ 20	≥ 20	≥ 20	≥ 20	≥ 20		
608.2530.01								≥ 24	≥24

G

全牙型，惠氏螺纹 型号111, 608
Full profile, Whitworth type 111, 608

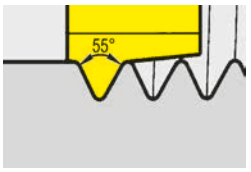

每英寸齿数 / tpi	19	14
	公称直径 Nominal diameter	
型号 / type **111** / Ds 13,4		
111.5519.02	≥ 18	
111.5514.02		≥ 21
	螺纹 / Thread	
型号 / type **608** / Ds 13,5		
608.5514.02		G½''/G¾''

梯形螺纹，米制螺纹 型号 608
Trapezoidal thread, metric type 608

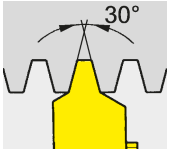

608.1525.01	Tr24x2,5
608.1730.01	Tr24x3
608.2240.01	Tr24x4

铣刀杆
Milling shank

M308

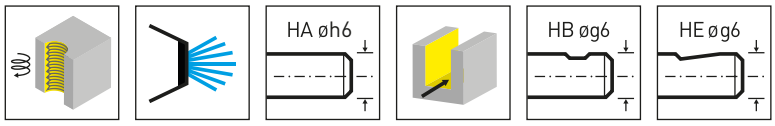

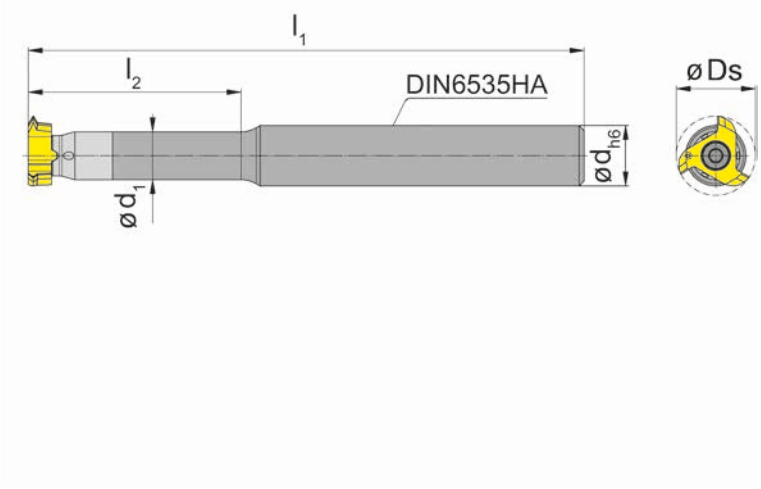

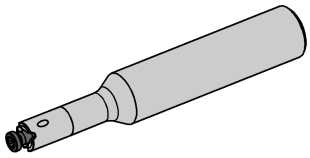

图示=右手型
Picture = right hand cutting version

产品型号 Part number	d	l_1	l_2	d_1	形式 Form	HWS
M308.0012.07A	12	160	-	8	A	308080R • 308080L
M308.1012.02A	12	110	42	9.5	A	308080R • 308080L
M308.1016.01A	16	110	33	9.5	A	308080R • 308080L
M308.1016.02A	16	110	45	9.5	A	308080R • 308080L
M308.1016.03A	16	130	64	9.5	A	308080R • 308080L
M308.1012.02B	12	110	42	9.5	B	308080R • 308080L
M308.1016.01B	16	110	33	9.5	B	308080R • 308080L
M308.1016.02B	16	110	45	9.5	B	308080R • 308080L
M308.1016.03B	16	130	64	9.5	B	308080R • 308080L
M308.1012.02E	12	110	42	9.5	E	308080R • 308080L
M308.1016.01E	16	110	33	9.5	E	308080R • 308080L
M308.1016.02E	16	110	45	9.5	E	308080R • 308080L
M308.1016.03E	16	130	64	9.5	E	308080R • 308080L

Ds见刀片
Ds see inserts

G

配件
Spare Parts

铣刀杆 Milling shank	锁紧螺钉 Clamping Screw	TORX PLUS®扳手 TORX PLUS® Wrench
M308...	**3.5.12T10EP**	**T10PL**

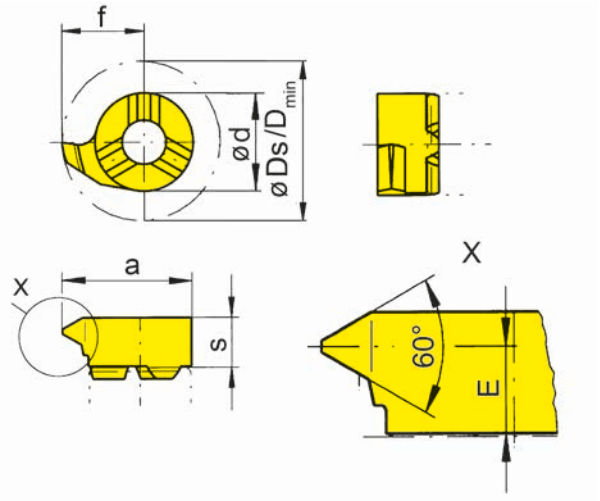

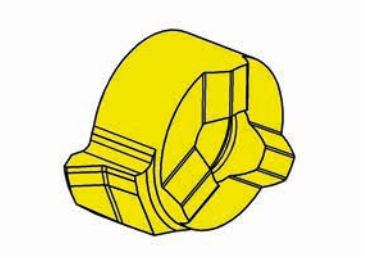

R=右手型-如图
R = right hand version shown

L=左手型
L = left hand version

硬质合金牌号
Carbide grades

▲ 库存
on stock

Δ 4周
4 weeks

产品型号 Part number	P	P_{max}	E	s	f	a	d	Ds	D_{min}	HIS	EG55	TH35	TN35
R111.0205.01	0.5	0.75	3.5	4.15	6.7	10.7	8	13.4	11	308080R	▲	▲	▲
R111.0510.01	1	1.25	3.3	4.15	6.7	10.7	8	13.4	11	308080R	▲	▲	▲
R111.0815.01	1.5	1.75	3.3	4.15	6.7	10.7	8	13.4	11	308080R	▲	▲	▲
R111.1020.01	2	2	3	4.15	6.7	10.7	8	13.4	11	308080R	▲	▲	▲
L111.0205.01	0.5	0.75	3.5	4.15	6.7	10.7	8	13.4	11	308080L	Δ	Δ	▲
L111.0510.01	1	1.25	3.3	4.15	6.7	10.7	8	13.4	11	308080L	▲	Δ	▲
L111.0815.01	1.5	1.75	3.3	4.15	6.7	10.7	8	13.4	11	308080L	▲	Δ	▲
L111.1020.01	2	2	3	4.15	6.7	10.7	8	13.4	11	308080L	Δ	Δ	▲

	EG55	TH35	TN35
P	●	●	●
M	o	●	●
K	o	●	●
N	-	●	●
S	-	●	●
H	-	-	-

G

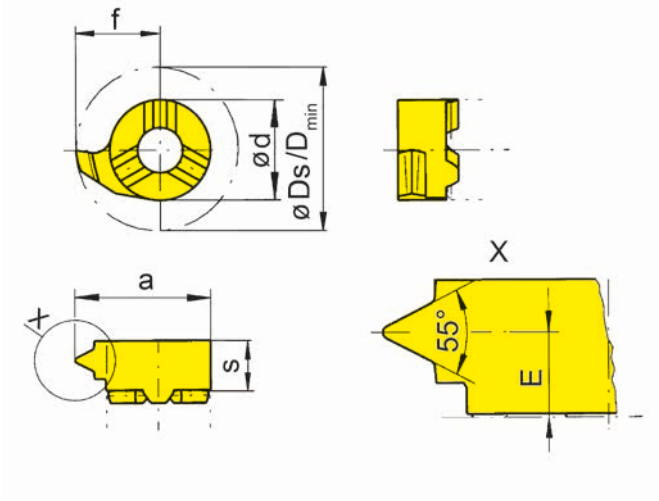

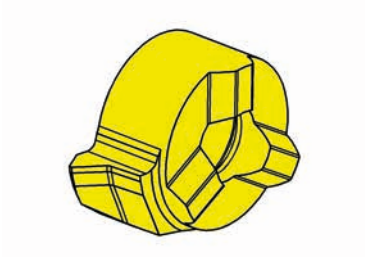

R=右手型-如图
R = right hand version shown

L=左手型
L = left hand version

硬质合金牌号
Carbide grades

▲ 库存
on stock

Δ 4周
4 weeks

产品型号 Part number	TPI	E	s	f	a	d	Ds	D_{min}	HIS	EG55	TA45	TN35
R111.5514.02	14	2.5	4.15	6.7	10.7	8	13.4	11	308080R	▲		▲
R111.5519.02	19	2.9	4.15	6.7	10.7	8	13.4	11	308080R	▲	Δ	▲
L111.5514.02	14	2.5	4.15	6.7	10.7	8	13.4	11	308080L	Δ		▲
L111.5519.02	19	2.9	4.15	6.7	10.7	8	13.4	11	308080L		Δ	▲

	EG55	TA45	TN35
P	●	●	●
M	o	●	●
K	o	●	●
N	-	●	●
S	-	●	●
H	-	-	-

G

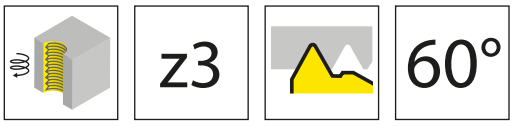

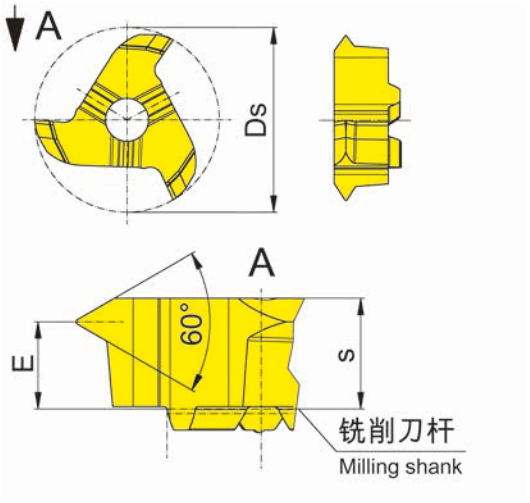

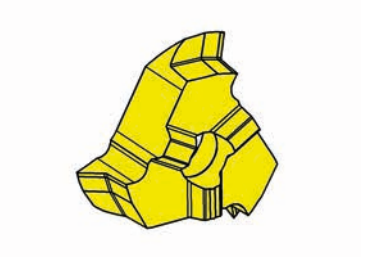

图示=右手型
Picture = right hand cutting version

硬质合金牌号
Carbide grades

▲ 库存
on stock

Δ 4周
4 weeks

产品型号 Part number	P	P_{max}	E	s	Ds	HIS	AS45	TA45	TF45	TI25	TN35
308.1325.01	2.5	2.5	3.3	4.7	13.2	308080R	▲	▲			
308.0720.01	1	2	3.3	4.7	15.7	308080R	▲			Δ	▲
308.0815.01	1.5	1.5	3.7	4.7	15.7	308080R	▲				▲
308.2530.01	2.5	3	2.7	4.7	15.7	308080R	▲		Δ	Δ	▲
P							●	●	●	●	●
M							●	●	●	●	●
K							●	●	●	●	●
N							o	●	●	●	●
S							●	●	●	●	●
H							-	-	-	-	-

注意事项：
308.0815.01 也适用于加工螺纹 UNF 7/8''-14
Note:
308.0815.01 also suitable for production of thread UNF 7/8‘‘-14

G

608

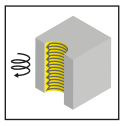

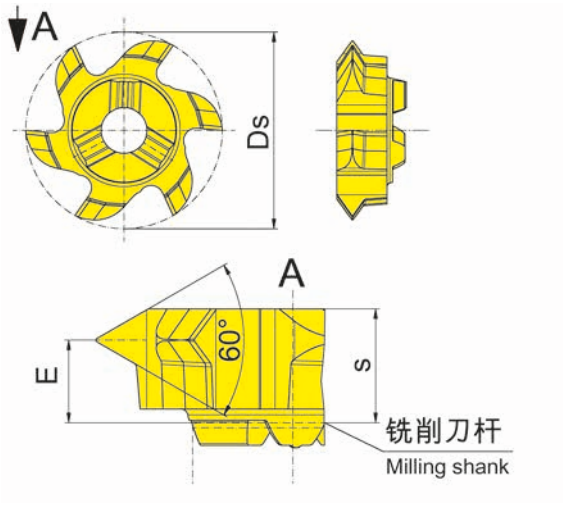

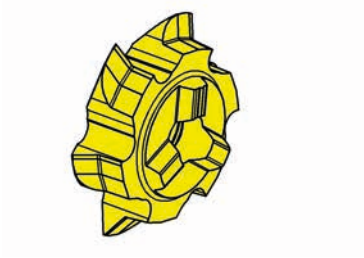

图示=右手型
Picture = right hand cutting version

硬质合金牌号
Carbide grades

▲ 库存
on stock

Δ 4周
4 weeks

产品型号 Part number	P	P_{max}	E	s	Ds	HIS		AS45	TA45	TI25
608.0720.01	1	2	3.3	4.55	15.7	308080R		▲		▲
608.1325.01	2.5	2.5	3.3	4.55	13.2	308080R		▲	▲	
608.2530.01	2.5	3	2.9	4.55	15.7	308080R		▲		▲
							P	●	●	●
							M	●	●	●
							K	●	●	●
							N	o	●	●
							S	●	●	●
							H	-	-	-

注意事项：
608.1325.01 也适用于加工螺纹 UNF 7/8''-14
Note:
608.1325.01 also suitable for production of thread UNF 7/8‘‘-14

G

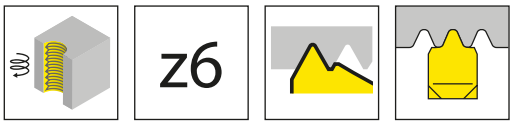

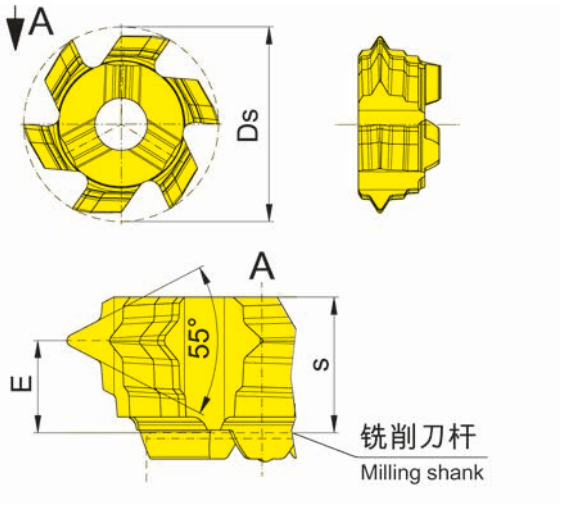

图示=右手型
Picture = right hand cutting version

硬质合金牌号
Carbide grades

▲ 库存
on stock

Δ 4周
4 weeks

产品型号 Part number	TPI	E	s	Ds	HIS
608.5514.02	14	3.2	4.7	13.5	308080R

	AS45	TA45	TI25
	▲	▲	Δ
P	●	●	●
M	●	●	●
K	●	●	●
N	o	●	●
S	●	●	●
H	-	-	-

G

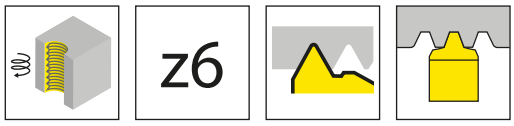

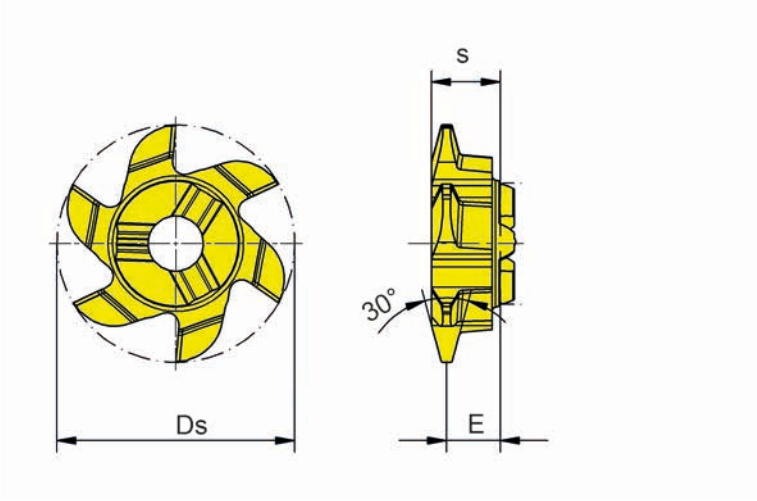

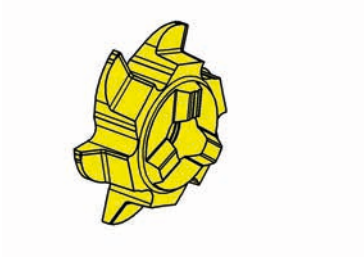

图示=右手型
Picture = right hand cutting version

硬质合金牌号
Carbide grades

▲ 库存
on stock

Δ 4周
4 weeks

产品型号 Part number	P	s	E	Ds	HIS		EG55
608.1525.01	2.5	4.55	3.56	15.7	308080R		▲
608.1730.01	3	4.55	3.4	15.7	308080R		▲
608.2240.01	4	4.55	3.16	15.7	308080R		▲
						P	●
						M	o
						K	o
						N	-
						S	-
						H	-

G

螺纹铣削(内圆)
Thread Milling (internal)

概述
Overview
页/Page
308

铣刀杆
Milling shank
M311

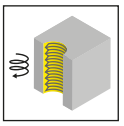

页/Page
309

刀片
Insert
311/611

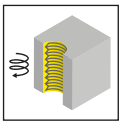

页/Page
310-314

G

注意:
公称直径总是螺纹上最大的直径。通常，这描述以螺纹尺寸为基础。
例如 M12 x 1 -> 公称直径 12
如果工件的公称直径小于推荐值，铣刀的过切会产生轮廓误差。

Attention:
The nominal diameter is always the largest Ø on the thread. As a rule, the designation is based on the size of the thread.
Example: M12 x 1 -> nominal diameter 12

Recutting of the milling tool will create profile errors if the nominal diameter of the component will be smaller than recommended.

M311

G

螺纹铣刀（圆弧插补铣削）

切削刃自 Ø 17.7 mm

Thread Milling Cutter (by circular interpolation)

from cutting edge Ø 17,7 mm

非全牙型，米制 型号 311, 611
Partial profile, metric type 311, 611

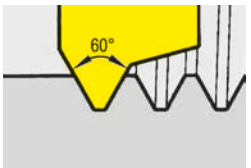

螺距/Pitch P	0,5	0,75	1,0	1,25	1,5	1,75	2,0	2,5	3,0	3,5
	公称直径 / Nominal diameter									
型号 / type **311** / Ds 17,7										
311.0515.01	≥ 20	≥ 20	≥ 20	≥ 20	≥ 22					
311.0510.01			≥ 22							
311.0720.01			≥ 22	≥ 22	≥ 22	≥ 22	≥ 22			
311.0815.01					≥ 24					
311.1020.01							≥ 28			
311.1325.01								≥ 34		
311.1630.01									≥ 34	
311.1835.01										≥ 34
311.2535.01								≥ 28	≥ 24	≥ 26
型号 / type **611** / Ds 17,7										
611.0515.01	≥ 20	≥ 20	≥ 20	≥ 20	≥ 22					
611.0720.01			≥ 22	≥ 22	≥ 22	≥ 22	≥ 22			
611.2535.01								≥ 28	≥ 24	≥ 26

G

全牙型，米制螺纹 型号 311, 611
Full profile, metric type 311, 611

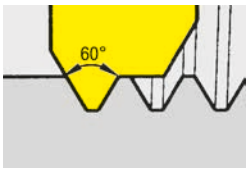

螺距/Pitch P	1,5	1,75	2,0	2,5	3,0	3,5
	公称直径 / Nominal diameter					
型号 / type **311** / Ds 17,7						
311.0815.02	≥ 23					
311.0917.02		≥ 24,5				
311.1020.02			≥ 25,5			
311.1325.02				≥ 28,5		
311.1630.02					≥ 32	
311.1835.02						≥ 35
型号 / type **611** / Ds 17,7						
611.0815	≥ 23					

全牙型，惠氏螺纹 型号 311
Full profile, Whitworth type 311

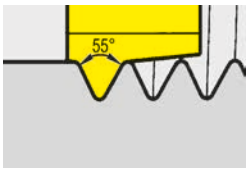

每英寸齿数 / tpi	14	11
	螺纹/ Thread	
型号 / type **311** / Ds 17,7		
311.5514.02	G¾"	
311.5511.02		G1"

铣刀杆
Milling shank

M311

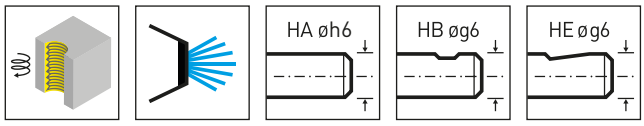

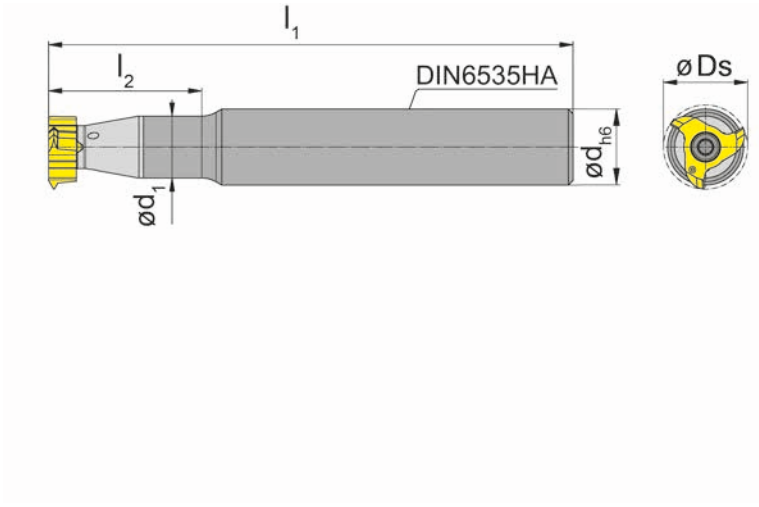

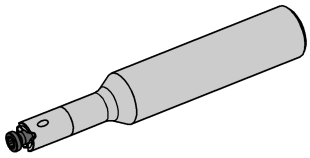

图示=右手型
Picture = right hand cutting version

产品型号 Part number	d	l_1	l_2	d_1	形式 Form	HWS
M311.0012.05A	12	130	20	9	A	311090R
M311.1316.01A	16	110	32	13	A	311090R
M311.1316.02A	16	130	45	13	A	311090R
M311.1316.03A	16	145	64	13	A	311090R
M311.1316.01B	16	110	32	13	B	311090R
M311.1316.02B	16	130	45	13	B	311090R
M311.1316.03B	16	145	64	13	B	311090R
M311.1316.01E	16	110	32	13	E	311090R
M311.1316.02E	16	130	45	13	E	311090R
M311.1316.03E	16	145	64	13	E	311090R

Ds见刀片
Ds see inserts

G

配件
Spare Parts

铣刀杆 Milling shank	**锁紧螺钉** Clamping Screw	**TORX PLUS®扳手** TORX PLUS® Wrench
M311...	**4.14T15P**	**T15PQ**

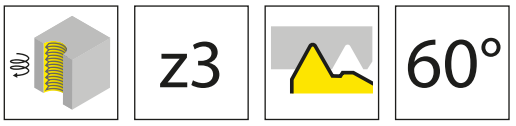

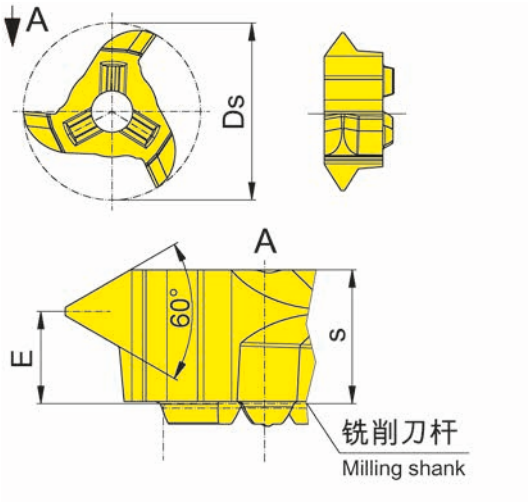

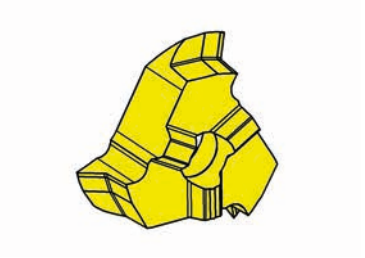

图示=右手型
Picture = right hand cutting version

硬质合金牌号
Carbide grades

▲ 库存
on stock

Δ 4周
4 weeks

产品型号 Part number	P	P_{max}	E	s	Ds	HIS		AS45	TA45	TN35
311.0515.01	0.5	1.5	4.8	5.95	17.7	311090R		▲	▲	
311.0510.01	1	1	5	5.95	17.7	311090R		▲		▲
311.0720.01	1	2	4.6	5.95	17.7	311090R		▲		▲
311.0815.01	1.5	1.5	4.8	5.95	17.7	311090R		▲		▲
311.1020.01	2	2	4.6	5.95	17.7	311090R		▲		▲
311.1325.01	2.5	2.5	4.4	5.95	17.7	311090R		▲		▲
311.2535.01	2.5	3.5	3.7	5.95	17.7	311090R		▲		▲
311.1630.01	3	3	4.3	5.95	17.7	311090R		▲		▲
311.1835.01	3.5	3.5	4.1	5.95	17.7	311090R		▲		▲
							P	●	●	●
							M	●	●	●
							K	●	●	●
							N	o	●	●
							S	●	●	●
							H	-	-	-

G

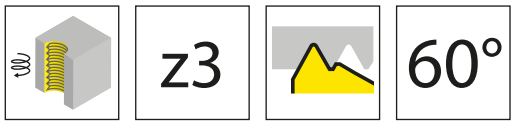

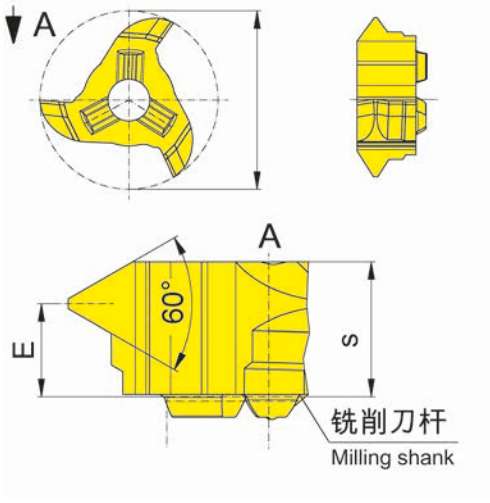

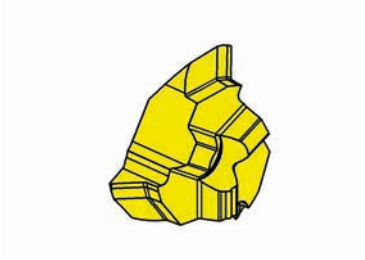

图示=右手型
Picture = right hand cutting version

硬质合金牌号
Carbide grades

▲ 库存
on stock

Δ 4周
4 weeks

产品型号 Part number	P	E	s	Ds	HIS		AS45	TN35
311.0815.02	1.5	4.8	5.95	17.7	311090R		▲	▲
311.1020.02	2	4.6	5.95	17.7	311090R		▲	▲
311.1325.02	2.5	4.4	5.95	17.7	311090R		▲	Δ
311.1630.02	3	4.3	5.95	17.7	311090R		▲	▲
311.1835.02	3.5	4.1	5.95	17.7	311090R		▲	▲
						P	●	●
						M	●	●
						K	●	●
						N	o	●
						S	●	●
						H	-	-

G

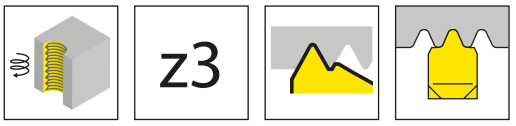

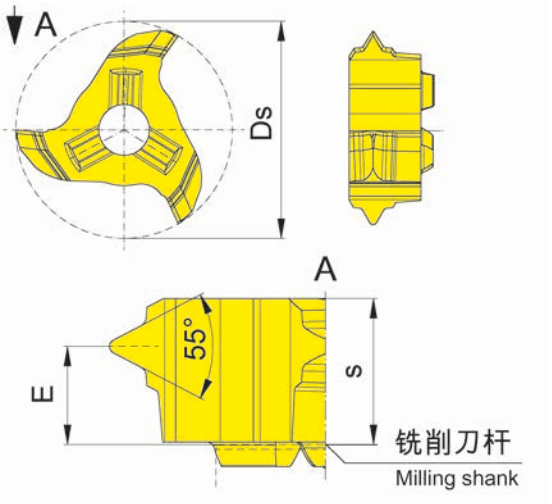

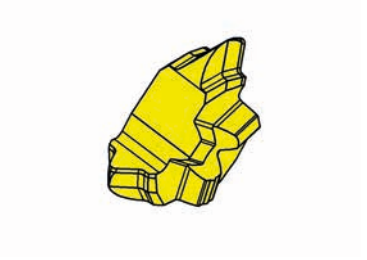

图示=右手型
Picture = right hand cutting version

硬质合金牌号
Carbide grades

▲ 库存
on stock

Δ 4周
4 weeks

产品型号 Part number	TPI	E	s	Ds	HIS		AS45	TA45	TI25	TN35
311.5511.02	11	4	5.95	17.7	311090R		▲	Δ	Δ	▲
311.5514.02	14	4.35	5.95	17.7	311090R		▲	Δ	▲	▲
						P	●	●	●	●
						M	●	●	●	●
						K	●	●	●	●
						N	o	●	●	●
						S	●	●	●	●
						H	-	-	-	-

G

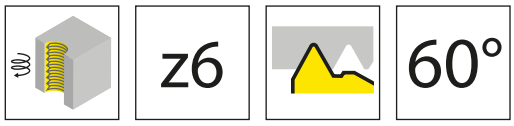

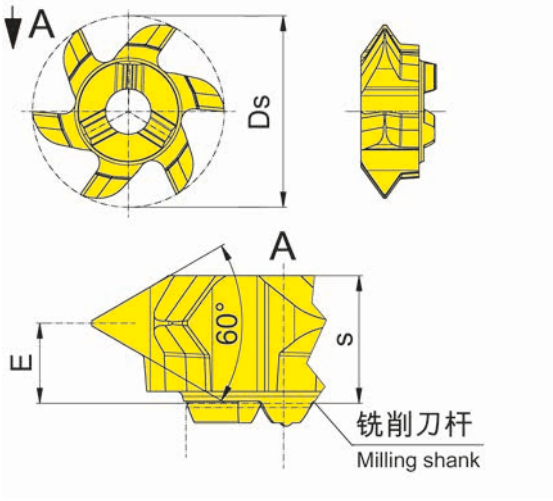

图示=右手型
Picture = right hand cutting version

硬质合金牌号
Carbide grades

▲ 库存
on stock

Δ 4周
4 weeks

产品型号 Part number	P	P_{max}	E	s	Ds	HIS		AS45	TA45	TI25
611.0515.01	0.5	1.5	4.8	5.75	17.7	311090R		▲	▲	
611.0720.01	1	2	4.6	5.75	17.7	311090R		▲		▲
611.2535.01	2.5	3.5	3.7	5.75	17.7	311090R		▲		▲
							P	●	●	●
							M	●	●	●
							K	●	●	●
							N	o	●	●
							S	●	●	●
							H	-	-	-

注意事项：
611.2535.01 也适用于加工螺纹UNF 1 1/4''-12, 1 1/8''-12 和 1 5/8''-12

Note:
611.2535.01 also suitable for production of thread UNF 1 1/4‘‘-12, 1 1/8‘‘-12 and 1 5/8‘‘-12

G

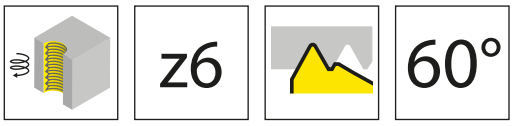

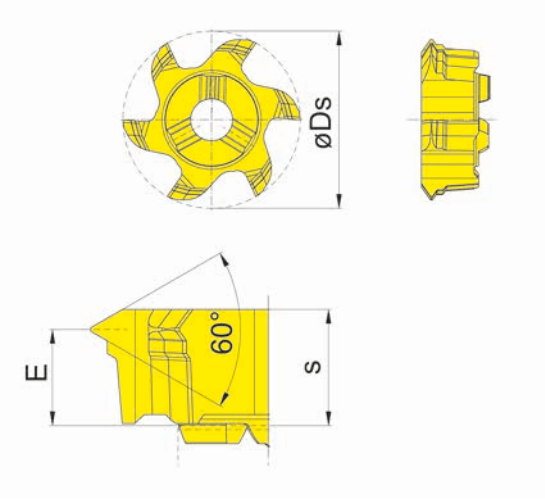

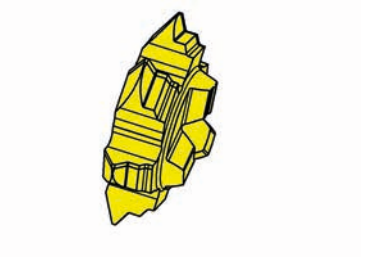

硬质合金牌号
Carbide grades

图示=右手型
Picture = right hand cutting version

▲ 库存
on stock

Δ 4周
4 weeks

产品型号 Part number	P	E	s	Ds	HIS		AS45
611.0815.02	1.5	4.8	5.95	17.7	311090R		▲
						P	●
						M	●
						K	●
						N	o
						S	●
						H	-

G

螺纹铣削(内圆)
Thread Milling (internal)

概述
Overview
页/Page
318

铣刀杆
Milling shank
M313

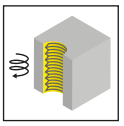

页/Page
319-320

刀片
Insert
313/613

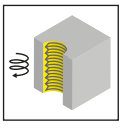

页/Page
321-325

G

注意:
公称直径总是螺纹上最大的直径。通常，这描述以螺纹尺寸为基础。
例如 M12 x 1 -> 公称直径 12
如果工件的公称直径小于推荐值，铣刀的过切会产生轮廓误差。

Attention:
The nominal diameter is always the largest Ø on the thread. As a rule, the designation is based on the size of the thread.
Example: M12 x 1 -> nominal diameter 12

Recutting of the milling tool will create profile errors if the nominal diameter of the component will be smaller than recommended.

M313

G

螺纹铣刀（圆弧插补铣削）

切削刃自 Ø 21.7 mm

Thread Milling Cutter (by circular interpolation)

from cutting edge Ø 21,7 mm

非全牙型，米制 型号 313, 613
Partial profile, metric type 313, 613

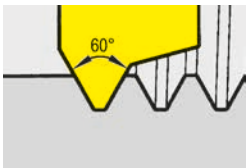

螺距/ Pitch P	1,0	1,25	1,5	1,75	2,0	2,5	3,0	3,5	4,0	4,5
	公称直径 / Nominal diameter									
型号 / type **313** / Ds 21,7										
313.0720.01	≥ 27	≥ 26	≥ 26	≥ 26	≥ 26					
313.0815.01			≥ 30							
313.1020.01					≥ 32					
313.1630.01							≥ 36			
313.1835.01								≥ 36		
313.2140.01									≥ 36	
313.2445.01										≥ 38
313.2545.01						≥ 33	≥ 32	≥ 30	≥ 30	≥ 30
型号 / type **613** / Ds 21,7										
613.0720.01	≥ 27	≥ 26	≥ 26	≥ 26	≥ 26					
613.2545.01						≥ 33	≥ 32	≥ 30	≥ 30	≥ 30

全牙型，米制螺纹 型号 313
Full profile, metric type 313

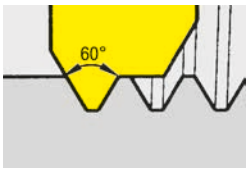

螺距/Pitch P	1,5	2,0	3,0	3,5	4,0	4,5
	公称直径 / Nominal diameter					
型号 / type **313** / Ds 21,7						
313.0815.02	≥ 27					
313.1020.02		≥ 30				
313.1630.02			≥ 37			
313.1835.02				≥ 40		
313.2140.02					≥ 44	
313.2445.02						≥ 48

全牙型，惠氏螺纹 型号 313, 613
Full profile, Whitworth type 313, 613

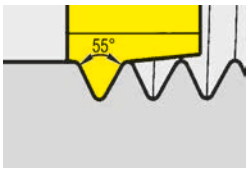

每英寸齿数 / tpi	11	8	6
	公称直径 Nominal diameter		
型号 / type **313** / Ds 21,7			
313.5508.02		≥ 40	
313.5506.02			≥ 48
	螺纹/ Thread		
型号 / type **313** / Ds 21,7			
313.5511.02	G1"		
Typ / type **613** / Ds 21,7			
613.5511.02	G1"		

G

铣刀杆
Milling shank

M313

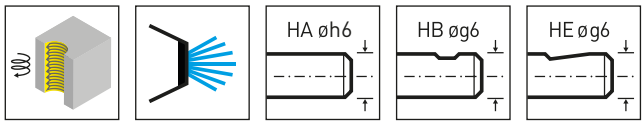

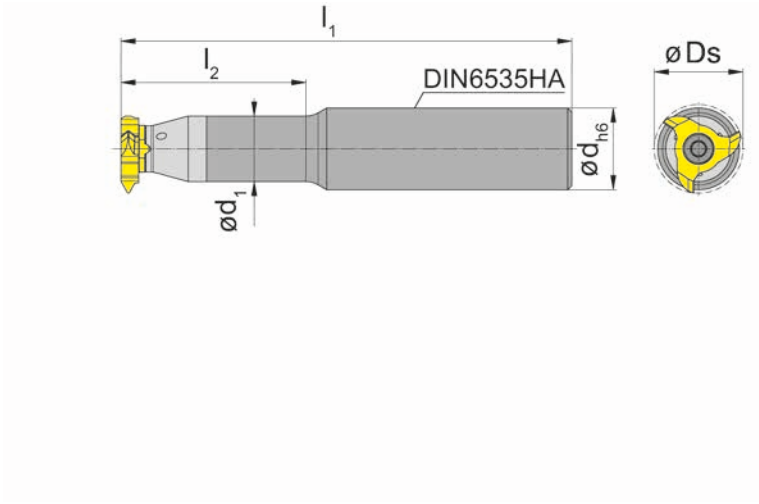

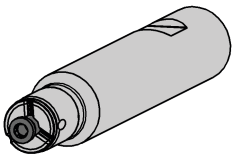

图示=右手型
Picture = right hand cutting version

产品型号 Part number	d	l_1	l_2	d_1	形式 Form	HWS
M313.1620.01A	20	110	45	16	A	313113R • 313113L
M313.1620.02A	20	130	65	16	A	313113R • 313113L
M313.1620.03A	20	160	85	16	A	313113R • 313113L
M313.1620.01B	20	110	45	16	B	313113R • 313113L
M313.1620.02B	20	130	65	16	B	313113R • 313113L
M313.1620.03B	20	160	85	16	B	313113R • 313113L
M313.1620.01E	20	110	45	16	E	313113R • 313113L
M313.1620.02E	20	130	65	16	E	313113R • 313113L
M313.1620.03E	20	160	85	16	E	313113R • 313113L

Ds见刀片
Ds see inserts

G

配件
Spare Parts

铣刀杆 Milling shank	锁紧螺钉 Clamping Screw	TORX PLUS®扳手 TORX PLUS® Wrench
M313...	**5.14T20P**	**T20PQ**

铣刀杆
Milling shank

M313

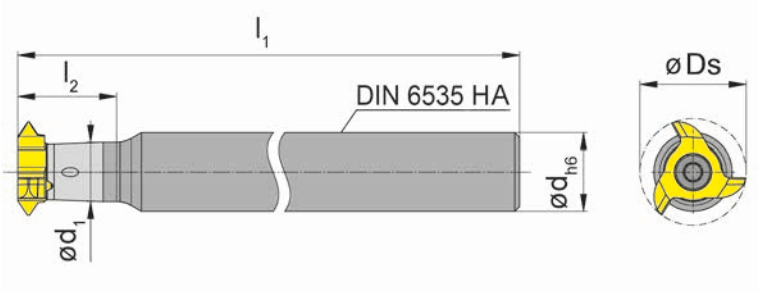

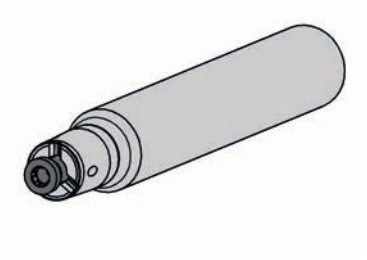

图示=右手型
Picture = right hand cutting version

产品型号 Part number	d	l_1	l_2	d_1	形式 Form	HWS
M313.0016.07A	16	160	20	12	A	313113R • 313113L

Ds见刀片
Ds see inserts

G

配件
Spare Parts

铣刀杆 Milling shank	**锁紧螺钉** Clamping Screw	**TORX PLUS®扳手** TORX PLUS® Wrench
M313.0016.07A	**5.14T20P**	**T20PQ**

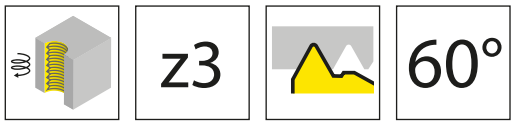

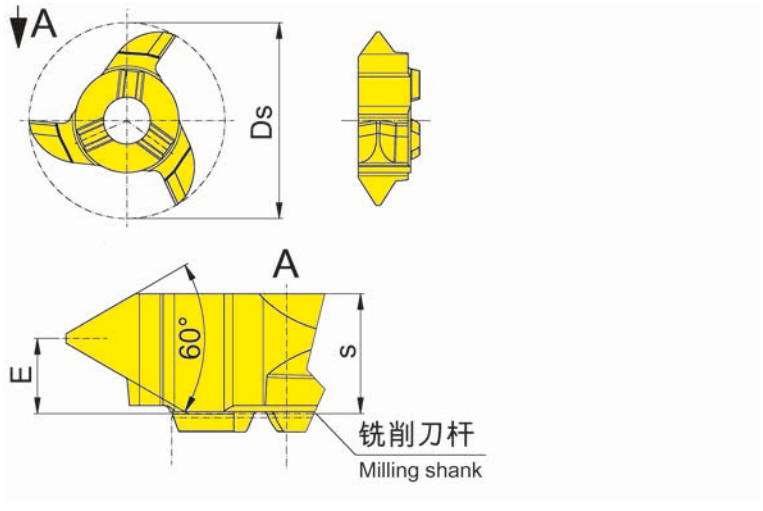

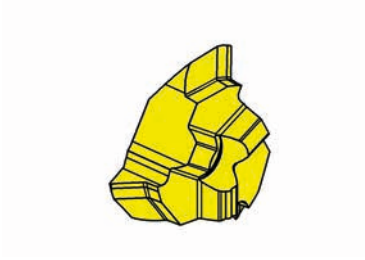

图示=右手型
Picture = right hand cutting version

硬质合金牌号
Carbide grades

▲ 库存
on stock

Δ 4周
4 weeks

产品型号 Part number	P	P_{max}	E	s	Ds	HIS	AS45	EG55	TF45	TN35
313.0720.01	1	2	4.6	5.9	21.7	313113R	▲	▲		▲
313.0815.01	1.5	1.5	4.8	5.9	21.7	313113R	▲	▲		▲
313.1020.01	2	2	4.6	5.9	21.7	313113R	▲	▲		▲
313.1630.01	3	3	4.3	5.9	21.7	313113R	▲	▲		▲
313.1835.01	3.5	3.5	4.1	5.9	21.7	313113R	▲	▲		Δ
313.2140.01	4	4	3.9	5.9	21.7	313113R	▲	▲	Δ	▲
313.2445.01	4.5	4.5	3.7	5.9	21.7	313113R	▲	▲		▲
313.2545.01	2.5	4.5	3.7	5.9	21.7	313113R	▲	▲		▲

	AS45	EG55	TF45	TN35
P	●	●	●	●
M	●	o	●	●
K	●	o	●	●
N	o	-	●	●
S	●	-	●	●
H	-	-	-	-

注意事项：
313.1020.01 也适用于加工螺纹UNF 1 1/4''-12, 1 1/8''-12 和 1 5/8''-12

note:
313.1020.01 also suitable for production of thread UNF 1 1/4‘‘-12, 1 1/8‘‘-12 and 1 5/8‘‘-12

G

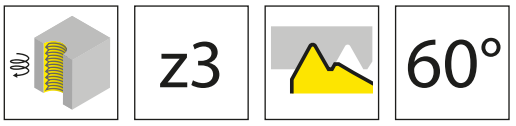

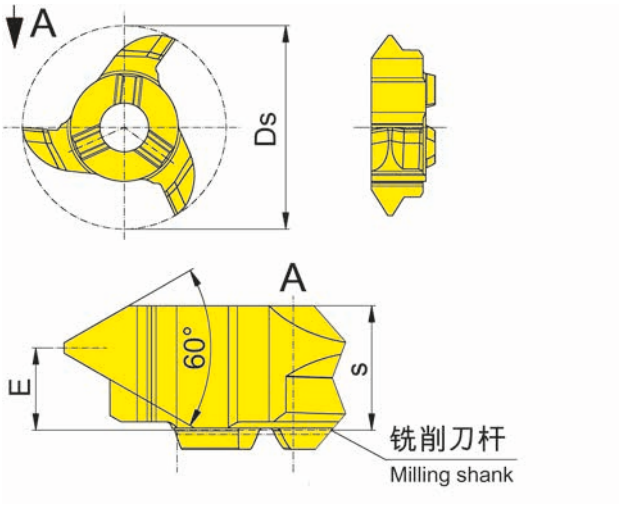

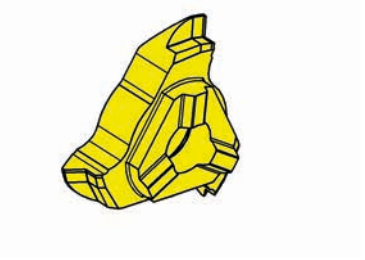

图示=右手型
Picture = right hand cutting version

硬质合金牌号
Carbide grades

▲ 库存
on stock

Δ 4周
4 weeks

产品型号 Part number	P	E	s	Ds	HIS		AS45	EG55	TN35
313.0815.02	1.5	4.8	5.9	21.7	313113R		▲	▲	▲
313.1020.02	2	4.6	5.9	21.7	313113R		▲	▲	▲
313.1630.02	3	4.3	5.9	21.7	313113R		▲	▲	▲
313.1835.02	3.5	4.1	5.9	21.7	313113R		▲	▲	▲
313.2140.02	4	3.9	5.9	21.7	313113R		▲	▲	▲
313.2445.02	4.5	3.8	5.9	21.7	313113R		▲	▲	▲
						P	●	●	●
						M	●	o	●
						K	●	o	●
						N	o	-	●
						S	●	-	●
						H	-	-	-

G

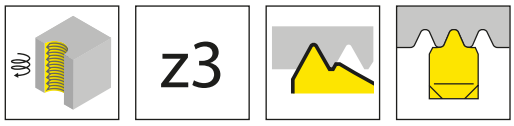

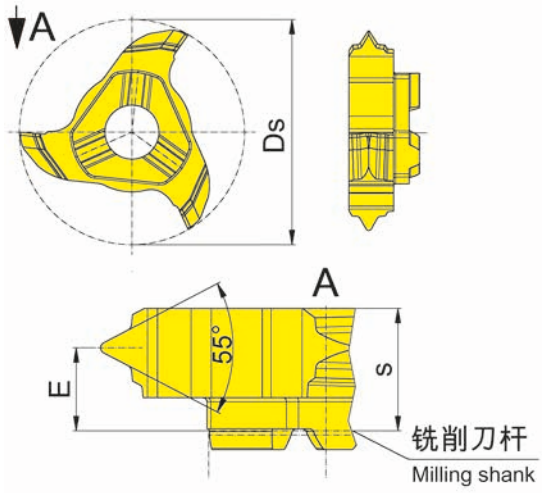

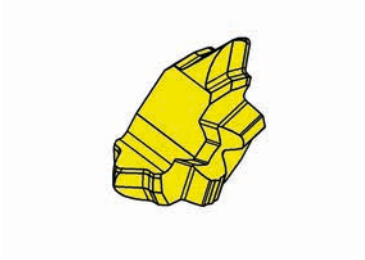

图示=右手型
Picture = right hand cutting version

硬质合金牌号
Carbide grades

▲ 库存
on stock

Δ 4周
4 weeks

产品型号 Part number	TPI	E	s	Ds	HIS		AS45	EG55	TN35
313.5506.02	6	3	5.9	21.7	313113R		▲	▲	Δ
313.5508.02	8	3.6	5.9	21.7	313113R		▲	▲	▲
313.5511.02	11	4	5.9	21.7	313113R		▲	▲	▲
						P	●	●	●
						M	●	o	●
						K	●	o	●
						N	o	-	●
						S	●	-	●
						H	-	-	-

G

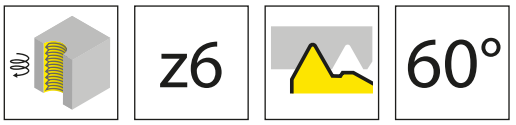

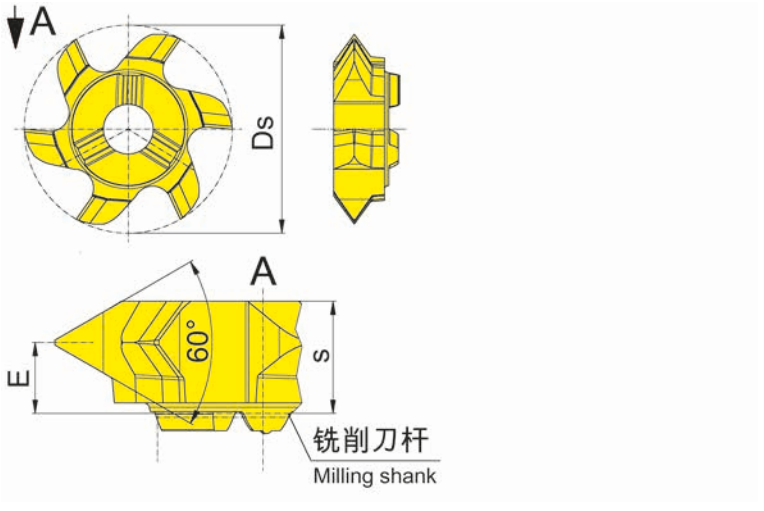

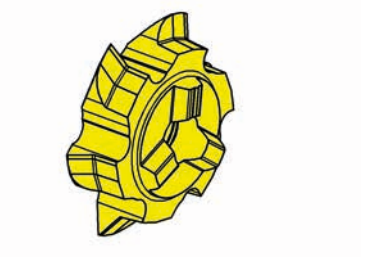

图示=右手型
Picture = right hand cutting version

硬质合金牌号
Carbide grades

▲ 库存
on stock

Δ 4周
4 weeks

产品型号 Part number	P	P_{max}	E	s	Ds	HIS		AS45	EG55	TI25
613.0720.01	1	2	4.6	5.6	21.7	313113R		▲	▲	▲
613.2545.01	2.5	4.5	3.7	5.75	21.7	313113R		▲	▲	▲
							P	●	●	●
							M	●	o	●
							K	●	o	●
							N	o	-	●
							S	●	-	●
							H	-	-	-

G

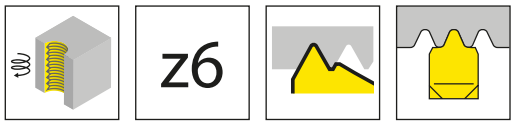

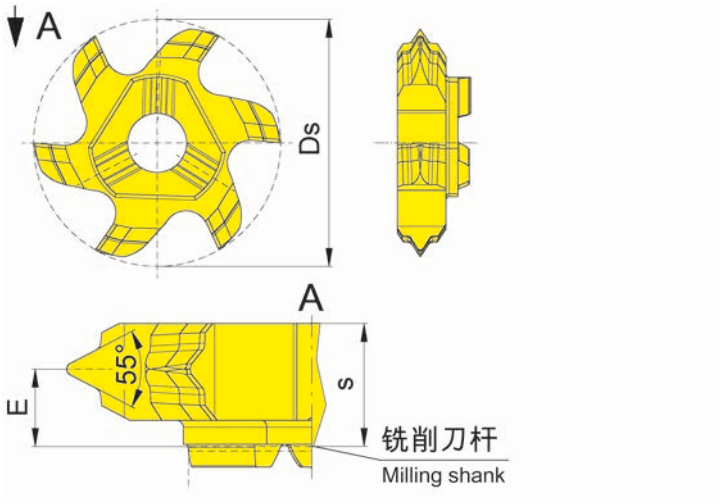

图示=右手型
Picture = right hand cutting version

硬质合金牌号
Carbide grades

▲ 库存
on stock

Δ 4周
4 weeks

产品型号 Part number	TPI	E	s	Ds	HIS
613.5511.02	11	3.4	5.4	21.7	313113R

	AS45	EG55	TA45	TI25
	▲	▲	▲	▲
P	●	●	●	●
M	●	o	●	●
K	●	o	●	●
N	o	-	●	●
S	●	-	●	●
H	-	-	-	-

G

螺纹铣削(内圆)
Thread Milling (internal)

概述
Overview
页/Page
328

铣刀杆
Milling shank
M328/SM328

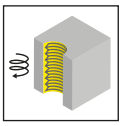

页/Page
329-330

刀片
Insert
328/628

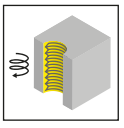

页/Page
331-334

G

注意:
公称直径总是螺纹上最大的直径。通常，这描述以螺纹尺寸为基础。
例如 M12 x 1 -> 公称直径 12
如果工件的公称直径小于推荐值，铣刀的过切会产生轮廓误差。

Attention:
The nominal diameter is always the largest Ø on the thread. As a rule, the designation is based on the size of the thread.
Example: M12 x 1 -> nominal diameter 12

Recutting of the milling tool will create profile errors if the nominal diameter of the component will be smaller than recommended.

M328

G

螺纹铣刀（圆弧插补铣削）

切削刃自 Ø 27.7 mm

Thread Milling Cutter (by circular interpolation)

from cutting edge Ø 27,7 mm

非全牙型，米制 型号 328, 628
Partial profile, metric type 328, 628

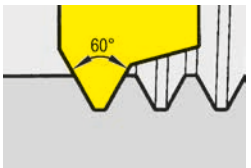

螺距 / Pitch P	1,0	1,25	1,5	1,75	2,0	2,5
	公称直径 / Nominal diameter					
型号 / type **328** / Ds 27,7						
328.0720.01	≥ 32	≥ 32	≥ 32	≥ 32	≥ 32	
328.1525.01			≥ 34	≥ 34	≥ 34	≥ 34
型号 / type **628** / Ds 27,7						
628.1525.01			≥ 34	≥ 34	≥ 34	≥ 34

螺距 / Pitch P	3,0	3,5	4,0	4,5	5,0	5,5	6,0
	公称直径 / Nominal diameter						
型号 / type **328** / Ds 27,7							
328.3050.01	≥ 40	≥ 38	≥ 38	≥ 38	≥ 38		
328.5060.01					≥ 48	≥ 46	≥ 44
型号 / type **628** / Ds 27,7							
628.3050.01	≥ 40	≥ 38	≥ 38	≥ 38	≥ 38		
628.5060.01					≥ 48	≥ 46	≥ 44

G

非全牙型，米制 型号 328, 628
Full profile, Whitworth type 328, 628

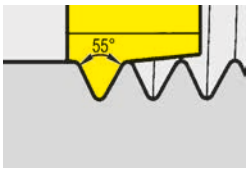

每英寸齿数 / tpi	11
	螺纹 / Thread
型号 / type **328** / Ds 27,7	
328.5511.02	G1½"
型号 / type **628** / Ds 27,7	
628.5511.02	G1½"

铣刀杆
Milling shank

M328

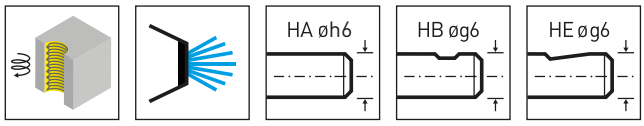

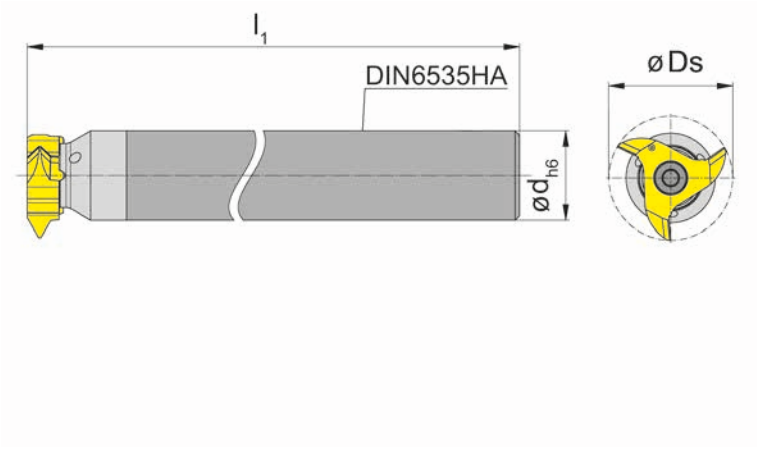

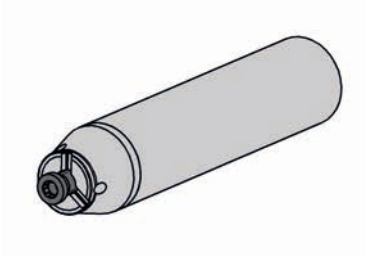

图示=右手型
Picture = right hand cutting version

产品型号 Part number	d	l_1	形式 Form	HWS
M328.0020.10A	20	250	A	328143R
M328.0020.D.05A	20	145	A	328143R
M328.0020.D.06A	20	160	A	328143R
M328.0020.D.07A	20	180	A	328143R
M328.0020.D.05B	20	145	B	328143R
M328.0020.D.06B	20	160	B	328143R
M328.0020.D.07B	20	180	B	328143R
M328.0020.D.05E	20	145	E	328143R
M328.0020.D.06E	20	160	E	328143R
M328.0020.D.07E	20	180	E	328143R

Ds见刀片
Ds see inserts

G

配件
Spare Parts

铣刀杆 Milling shank	锁紧螺钉 Clamping Screw	TORX PLUS®扳手 TORX PLUS® Wrench
M328.0020.10A	**5.14T20P**	**T20PQ**
M328.0020.D....	**5.17T20P**	**T20PQ**

铣刀杆
Milling shank

SM328

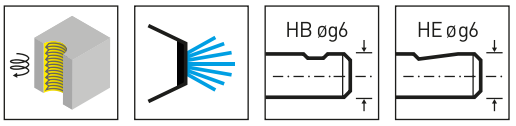

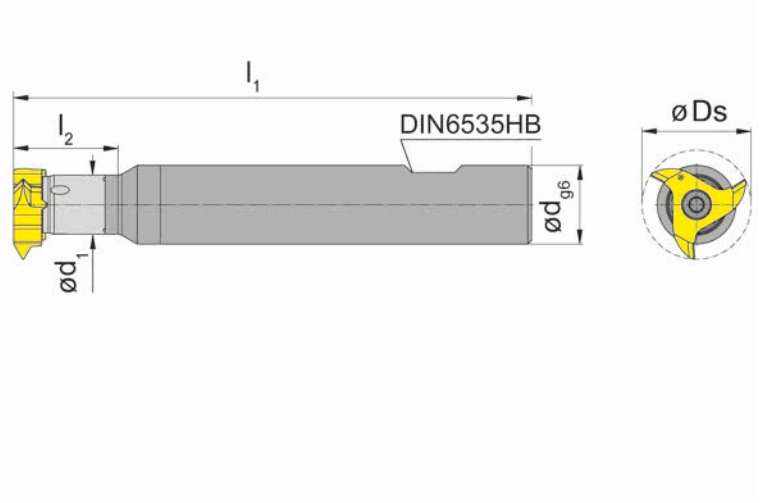

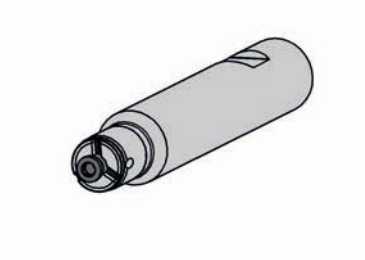

图示=右手型
Picture = right hand cutting version

产品型号 Part number	d	l_1	l_2	d_1	形式 Form	HWS
SM328.0020.05B	20	130	25	15	B	328143R
SM328.0020.06B	20	145	-	20	B	328143R
SM328.0020.07B	20	160	25	15	B	328143R
SM328.0020.08B	20	200	-	20	B	328143R
SM328.0020.05E	20	130	25	15	E	328143R
SM328.0020.06E	20	145	-	20	E	328143R
SM328.0020.07E	20	160	25	15	E	328143R
SM328.0020.08E	20	200	-	20	E	328143R

刀杆材质：钨基合金－良好的抗振性能
Material of shank: tungsten alloy (giving good vibration resistance)

Ds见刀片
Ds see inserts

G

配件
Spare Parts

铣刀杆 Milling shank	锁紧螺钉 Clamping Screw	TORX PLUS®扳手 TORX PLUS® Wrench
SM328...	**5.17T20P**	**T20PQ**

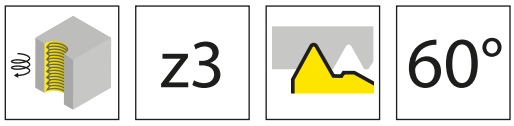

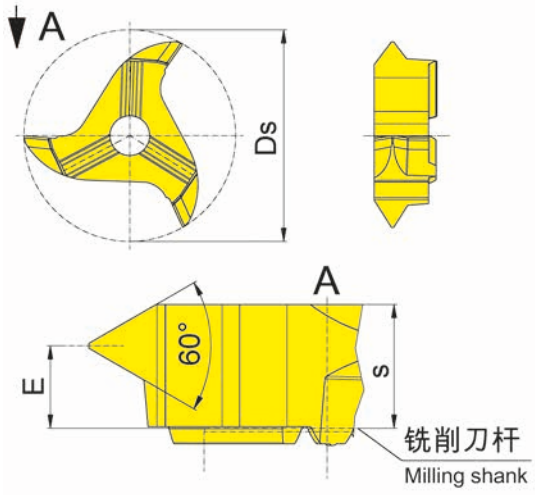

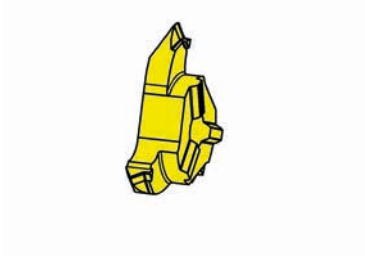

图示=右手型
Picture = right hand cutting version

硬质合金牌号
Carbide grades

▲ 库存
on stock

Δ 4周
4 weeks

产品型号 Part number	P	P_{max}	E	s	Ds	HIS	AS45	TI25	TN35
328.0720.01	1	2	4.6	5.95	27.7	328114R	▲		▲
328.1525.01	1.5	2.5	4.3	5.95	27.7	328114R	▲		▲
328.3050.01	3	5	4.8	7.2	27.7	328114R	▲	▲	▲
328.5060.01	5	6	4.4	7.2	27.7	328114R	▲		▲

	AS45	TI25	TN35
P	●	●	●
M	●	●	●
K	●	●	●
N	o	●	●
S	●	●	●
H	-	-	-

G

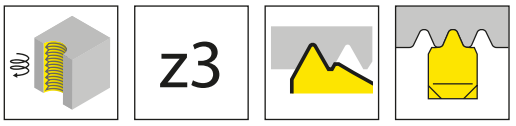

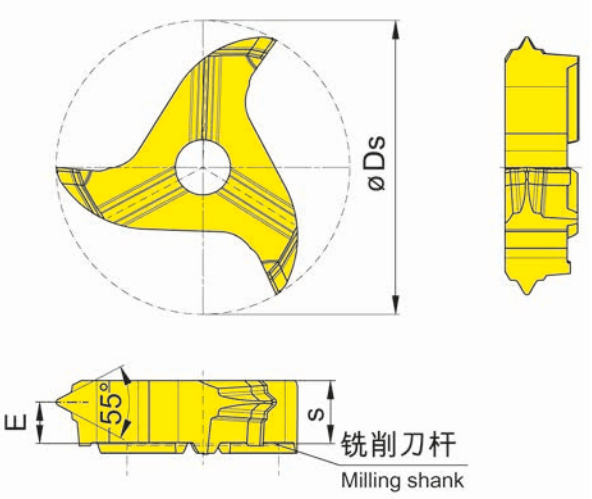

图示=右手型
Picture = right hand cutting version

硬质合金牌号
Carbide grades

▲ 库存
on stock

Δ 4周
4 weeks

产品型号 Part number	TPI	E	s	Ds	HIS		AS45
328.5511.02	11	3.9	5.95	27.7	328114R		▲
						P	●
						M	●
						K	●
						N	o
						S	●
						H	-

G

z6

60°

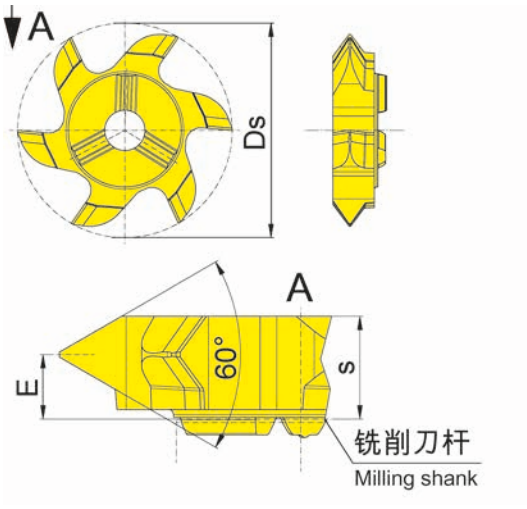

图示=右手型
Picture = right hand cutting version

硬质合金牌号
Carbide grades

▲ 库存
on stock

Δ 4周
4 weeks

产品型号 Part number	P	P_{max}	E	s	Ds	HIS	AS45	TI25
628.1525.01	1.5	2.5	4.8	6	27.7	328114R	▲	▲
628.3050.01	3	5	3.7	5.75	27.7	328114R	▲	▲
628.5060.01	5	6	3.2	5.75	27.7	328114R	▲	▲
							P ●	●
							M ●	●
							K ●	●
							N o	●
							S ●	●
							H -	-

G

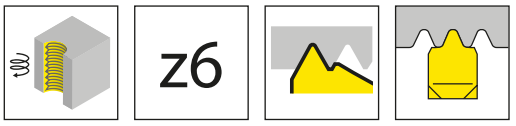

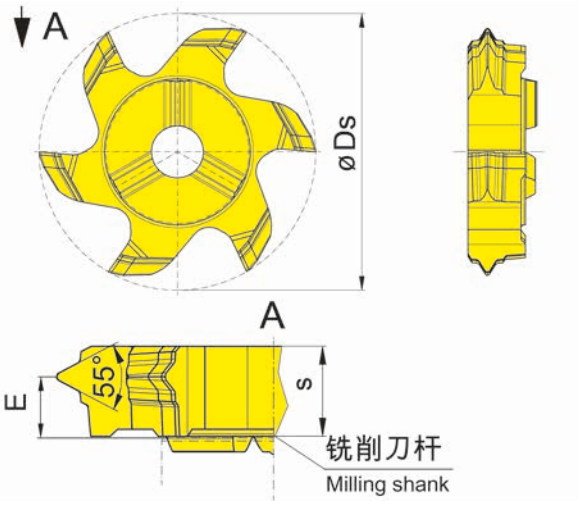

图示=右手型
Picture = right hand cutting version

硬质合金牌号
Carbide grades

▲ 库存
on stock

Δ 4周
4 weeks

产品型号 Part number	TPI	E	s	Ds	HIS		AS45
628.5511.02	11	3.9	5.85	27.7	328114R		▲
						P	●
						M	●
						K	●
						N	o
						S	●
						H	-

G

螺纹铣削(内圆)
Thread Milling (internal)

概述
Overview
页/Page
338

铣刀杆
Milling shank
M332

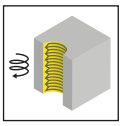

页/Page
339

刀片
Insert
632

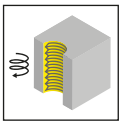

页/Page
340

G

注意:
公称直径总是螺纹上最大的直径。通常，这描述以螺纹尺寸为基础。
例如 M12 x 1 -> 公称直径 12
如果工件的公称直径小于推荐值，铣刀的过切会产生轮廓误差。

Attention:
The nominal diameter is always the largest Ø on the thread. As a rule, the designation is based on the size of the thread.
Example: M12 x 1 -> nominal diameter 12

Recutting of the milling tool will create profile errors if the nominal diameter of the component will be smaller than recommended.

M332

G

螺纹铣刀（圆弧插补铣削）

切削刃自 Ø 31.7 mm

Thread Milling Cutter (by circular interpolation)

from cutting edge Ø 31,7 mm

非全牙型，米制 型号 632
Partial profile, metric type 632

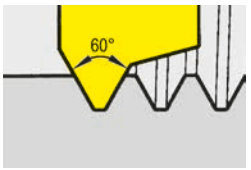

螺距 / Pitch P	2,5	3,0	3,5	4,0	4,5	5,0	5,5	6,0
	公称直径 / Nominal diameter							
型号 / type **632** / Ds 31,7								
632.2545.01	≥ 42	≥ 42	≥ 46	≥ 42	≥ 42			
632.4060.01				≥ 46	≥ 46	≥ 46	≥ 46	≥ 46

G

铣刀杆
Milling shank

M332

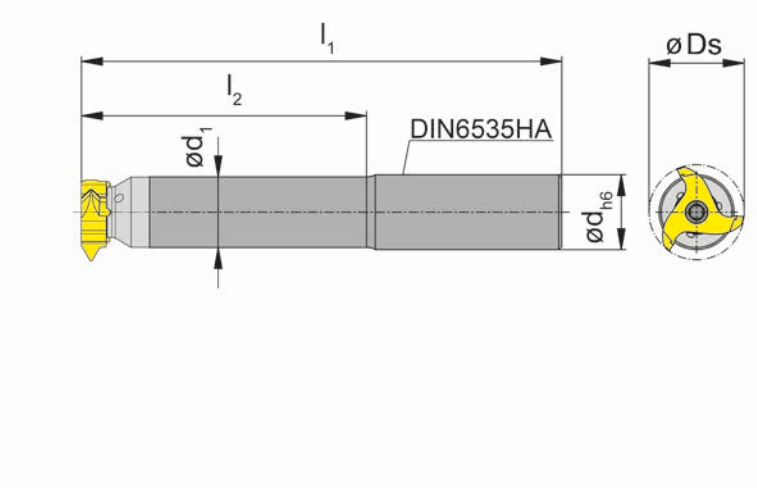

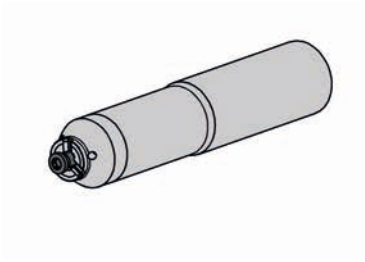

图示=右手型
Picture = right hand cutting version

产品型号 Part number	d	l_1	l_2	d_1	形式 Form	HWS
M332.2325.06A	25	160	95	23.5	A	332143R
M332.2325.07A	25	180	115	23.5	A	332143R
M332.2325.08A	25	200	135	23.5	A	332143R
M332.2325.09A	25	250	185	23.5	A	332143R

Ds见刀片
Ds see inserts

G

配件
Spare Parts

铣刀杆 Milling shank	**锁紧螺钉** Clamping Screw	**TORX PLUS®扳手** TORX PLUS® Wrench
M332...	**5.17T20P**	**T20PQ**

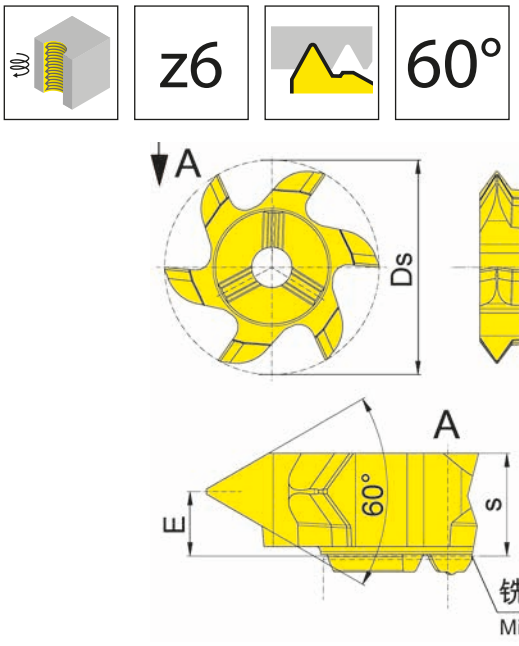

图示=右手型
Picture = right hand cutting version

硬质合金牌号
Carbide grades

▲ 库存
on stock

Δ 4周
4 weeks

产品型号 Part number	P	P_{max}	E	s	Ds	HIS		AS45	TI25
632.2545.01	2.5	4.5	3.7	5.8	31.7	332143R		▲	▲
632.4060.01	4	6	3.2	5.8	31.7	332143R		▲	▲
							P	●	●
							M	●	●
							K	●	●
							N	o	●
							S	●	●
							H	-	-

G

螺纹铣削(内圆)
Thread Milling (internal)

概述
Overview
页/Page
344

杆式铣刀
End Mill
M275

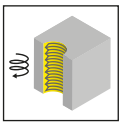

页/Page
345

铣刀
Milling cutter
M275

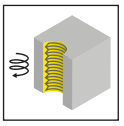

页/Page
346

可转位刀片
Indexable insert
RS275

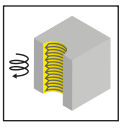

页/Page
347

G

注意:
公称直径总是螺纹上最大的直径。通常，这描述以螺纹尺寸为基础。
例如 M12 x 1 -> 公称直径 12
如果工件的公称直径小于推荐值，铣刀的过切会产生轮廓误差。

Attention:
The nominal diameter is always the largest Ø on the thread. As a rule, the designation is based on the size of the thread.
Example: M12 x 1 -> nominal diameter 12

Recutting of the milling tool will create profile errors if the nominal diameter of the component will be smaller than recommended.

M275

G

螺纹铣刀（圆弧插补铣削）

切削刃自 Ø 31 mm

Thread Milling Cutter (by circular interpolation)

from cutting edge Ø 31 mm

非全牙型，米制 型号 S275
Partial profile, metric type S275

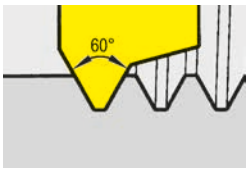

螺距 / Pitch P	1,5	2,0	2,5	3,0	3,5
	公称直径 / Nominal diameter				
型号 / type **S275** / Ds 31					
RS275.1535.01	≥ 45				
型号 / type **S275** / Ds 38					
RS275.1535.01	≥ 54				
型号 / type **S275** / Ds 48					
RS275.1535.01	≥ 70				
型号 / type **S275** / Ds 58					
RS275.1535.01	≥ 83				

G

M275

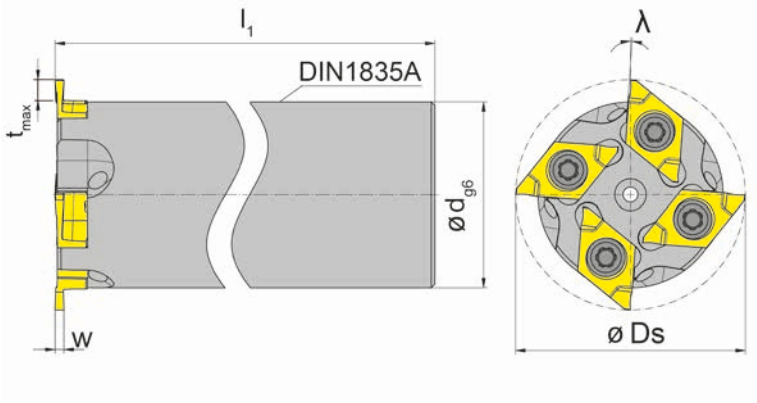

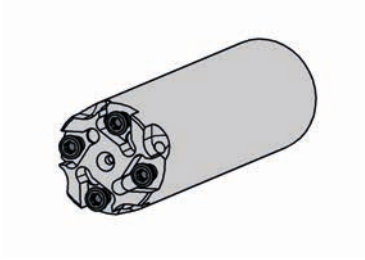

图示=右手型
Picture = right hand cutting version

产品型号 Part number	Ds	d	l_1	λ	HWS
M275.031.D25.3.04A	31	25	125	4°	275041R

G

配件
Spare Parts

杆式铣刀 End Mill	**锁紧螺钉** Clamping Screw	**TORX PLUS®扳手** TORX PLUS® Wrench
M275.031.D25.3.04A	**3.5.10T10P**	**T10PL**

M275

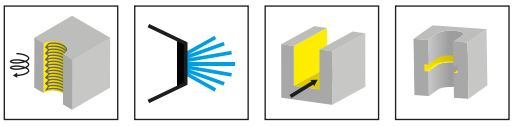

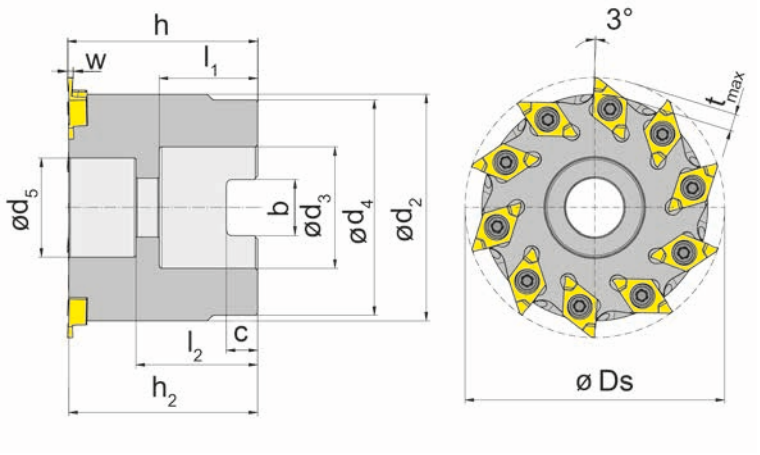

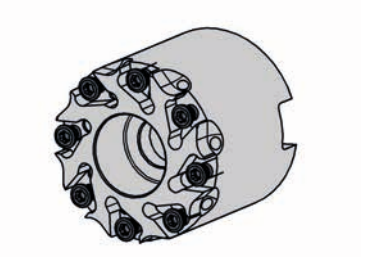

图示=右手型
Picture = right hand cutting version

产品型号 Part number	Z	Ds	h_2	h	d_5	d_4	d_3	l_1	l_2	b	C	d_2	HWS
M275.0038.A16.05	5	38	32.7	33	13.5	32	16	18	22.7	8.4	5.6	32	275041R
M275.0048.A22.08	8	48	36.7	37	18.5	40.5	22	20	24.7	10.4	6.3	40.5	275041R
M275.0058.A27.10	10	58	42.2	42.5	22	48	27	22	27.2	12.4	7	50	275041R
M275.0078.A32.14	14	78	49.7	50	33	58	32	25	36.7	14.4	8	70.5	275041R

G

配件
Spare Parts

铣刀 Milling cutter	锁紧螺钉 Clamping Screw	TORX PLUS®扳手 TORX PLUS® Wrench
M275...	**3.5.10T10P**	**T10PL**

可转位刀片
Indexable insert

RS275

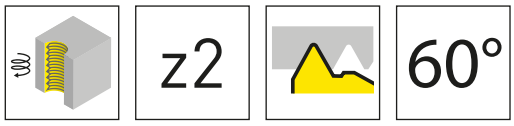

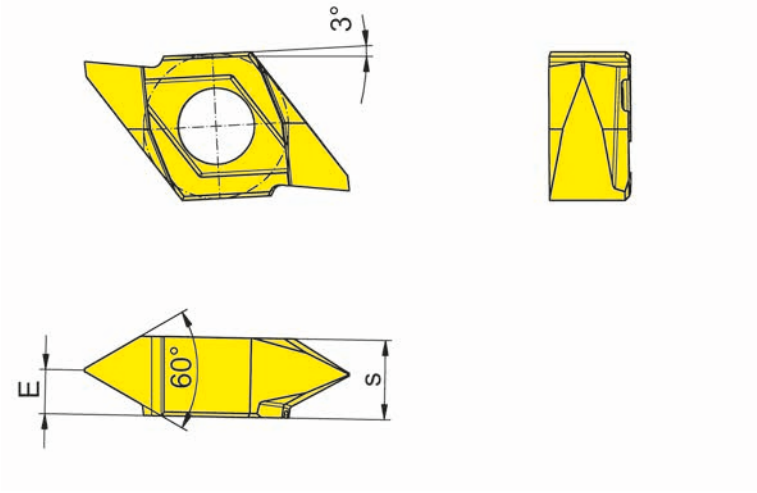

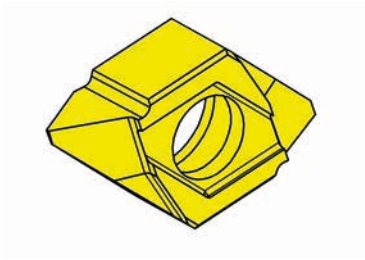

硬质合金牌号
Carbide grades

R=右手型-如图
R = right hand version shown

▲ 库存
on stock

Δ 4周
4 weeks

产品型号 Part number	P	P_{max}	E	s	HIS		TA45
RS275.1535.01	1.5	3.5	2.3	4.1	275041R		▲
						P	●
						M	●
						K	●
						N	●
						S	●
						H	-

G

螺纹铣削(内圆)
Thread Milling (internal)

概述
Overview
页/Page
350

杆式铣刀
End Mill
380

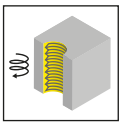

页/Page
351

铣刀
Milling cutter
380

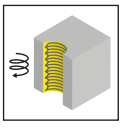

页/Page
352

可转位刀片
Indexable insert
314

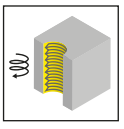

页/Page
353

G

注意:
公称直径总是螺纹上最大的直径。通常，这描述以螺纹尺寸为基础。
例如 M12 x 1 -> 公称直径 12
如果工件的公称直径小于推荐值，铣刀的过切会产生轮廓误差。

Attention:
The nominal diameter is always the largest Ø on the thread. As a rule, the designation is based on the size of the thread.
Example: M12 x 1 -> nominal diameter 12

Recutting of the milling tool will create profile errors if the nominal diameter of the component will be smaller than recommended.

380

G

螺纹铣刀(圆弧插补铣削)

切削刃自Ø 44 mm

Thread Milling Cutter (by circular interpolation)

from cutting edge Ø 44 mm

非全牙型，米制 型号 314
Partial profile, metric type 314

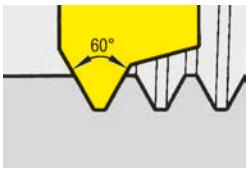

螺距 / Pitch P	1,5	2,0	2,5	3,0	4,0	5,0	5,5	6,0
	公称直径 / Nominal diameter							
型号 / type **314** / Ds 44								
R314.1535.01	≥ 52	≥ 50	≥ 50	≥ 50				
R314.2140.01					≥ 72			
R314.3260.01								≥ 85
R314.4060.01					≥ 65		≥ 56	≥ 64
型号 / type **314** / Ds 63								
R314.1535.01	≥ 72	≥ 70	≥ 70	≥ 70				
R314.2140.01					≥ 95			
R314.3260.01								≥ 110
R314.4060.01					≥ 88			≥ 80

G

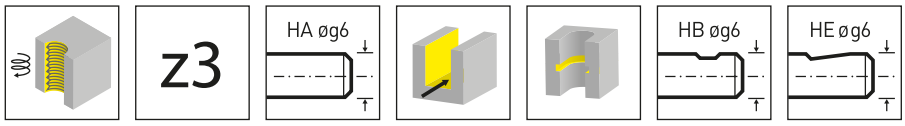

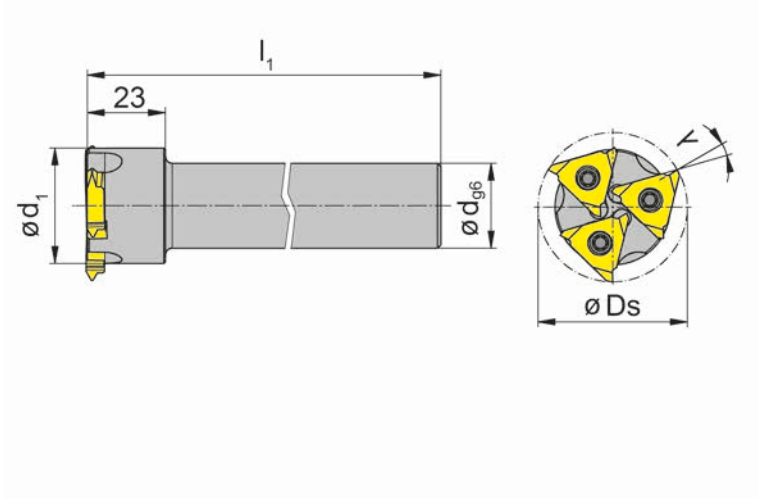

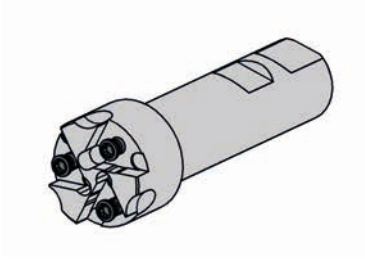

图示=右手型
Picture = right hand cutting version

产品型号 Part number	Ds	d	l_1	d_1	λ	形式 Form	HWS
380.0044.03A	44	25	125	34	14°	A	314027R • 314041R • 314052R
380.0044.03B	44	25	125	34	14°	B	314027R • 314041R • 314052R
380.0044.03E	44	25	125	34	14°	E	314027R • 314041R • 314052R

G

配件
Spare Parts

杆式铣刀 End Mill	锁紧螺钉 Clamping Screw	TORX PLUS®扳手 TORX PLUS® Wrench
380...	**5.12T20P**	**T20PQ**

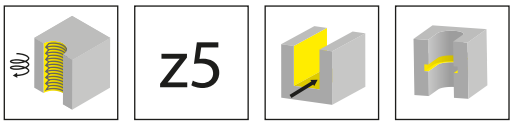

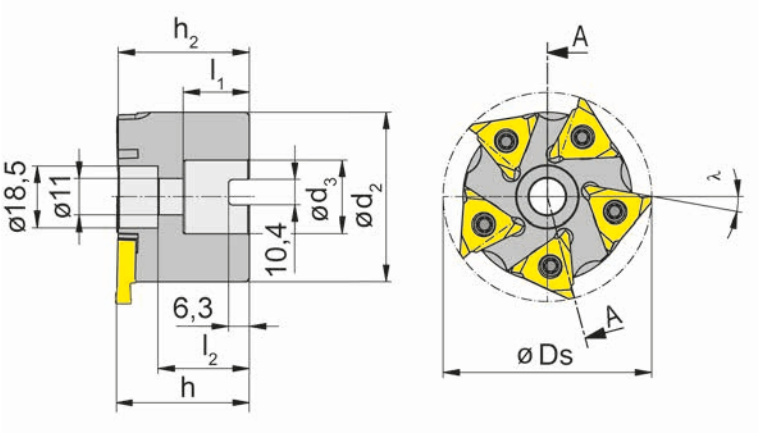

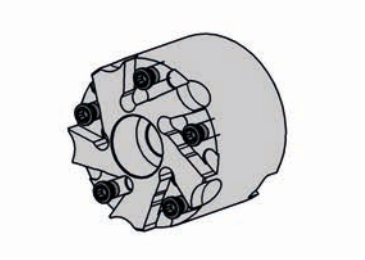

图示=右手型
Picture = right hand cutting version

产品型号 Part number	Ds	h_2	h	d_3	l_1	l_2	λ	d_2	HWS
380.0063.05	63	39.6	40	22	20	27.6	10°	51	314027R • 314041R • 314052R

中心孔和键槽均依据DIN138标准
Cutterhole and cross keyway as per DIN 138

G

配件
Spare Parts

铣刀 Milling cutter	锁紧螺钉 Clamping Screw	TORX PLUS®扳手 TORX PLUS® Wrench
380.0063.05	**5.12T20P**	**T20PQ**

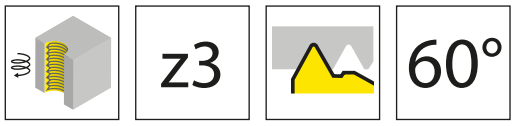

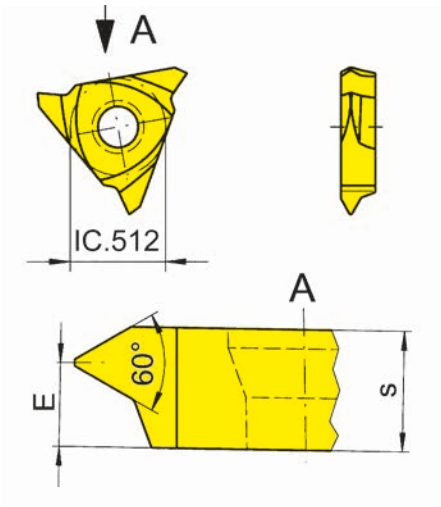

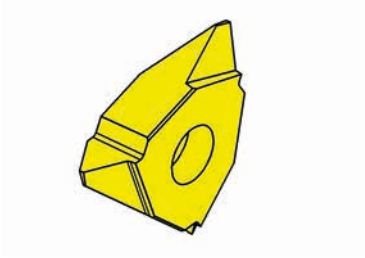

图示=右手型
Picture = right hand cutting version

硬质合金牌号
Carbide grades

▲ 库存
on stock

Δ 4周
4 weeks

产品型号 Part number	P	P_{max}	E	s	Ds	HIS	TN35
R314.1535.01	1.5	3.5	3.3	5.45	44	314052R	▲
R314.2140.01	4	4	3	5.45	44	314052R	▲
R314.4060.01	4	6	2.7	5.45	44	314052R	▲
R314.3260.01	6	6	2.7	5.45	63	314052R	▲

P	●
M	●
K	●
N	●
S	●
H	-

注意事项：
R314.3260.01仅适用于380.0063.05铣刀
Note:
R314.3260.01 only for milling cutter 380.0063.05

G

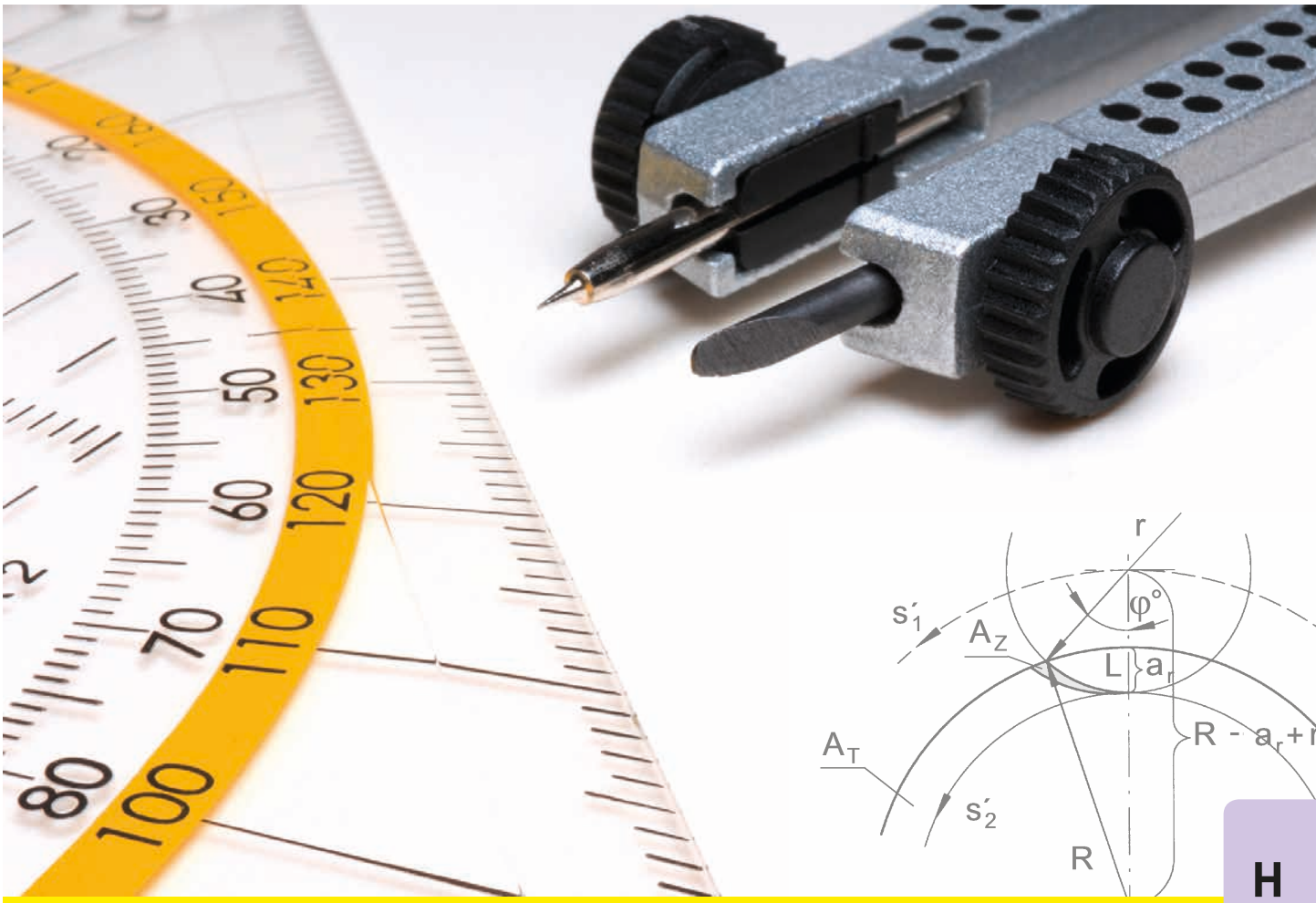

H

概要/Summary	页/Page
进给量的计算 Calculating the Feed Rate	356
符号 Symbols	357
计算公式 Formulas	358 - 359
切削参数 Cutting Data	360 - 365

切屑中间厚度h_m 计算进给量
Medium chip thickness h_m for calculating the feed rate

ISO	108,111,116, 306-336, 606-636,911-939	S310 / 314 / S275 / S475	S101
	h_m (mm)	h_m (mm)	h_m (mm)
P	0,01 - 0,05	0,01 - 0,05	0,01 - 0,04
M	0,01 - 0,04	0,01 - 0,04	0,01 - 0,03
K	0,01 - 0,05	0,01 - 0,05	0,01 - 0,03
N	0,01 - 0,05	0,01 - 0,05	0,01 - 0,06
S	0,01 - 0,04	0,01 - 0,04	0,01 - 0,02

H

$f_z = (h_m \times \pi \times d_e \times \phi s) / (360° \times a_e)$ [简化 $f_z = h_m \times \sqrt{(d_e/a_e)}$ 以及$a_e/d_e < 0,3$]
$f_z = (h_m \times \pi \times d_e \times \phi s) / (360° \times a_e)$ [simplified $f_z = h_m \times \sqrt{(d_e/a_e)}$ with $a_e/d_e < 0,3$]

ISO

a_r	a_e	径向切削深度 radial depth of cut	
d	d_e	切削刃Ø [mm] Cutting edge Ø [mm]	
f		每转进给量 Feed per revolutions	$f = f_z \cdot Z$ [mm/U] [mm/rev]
f_z	s_z	进给/齿 Feed/tooth	$f_z = \frac{v_f}{Z \cdot n}$ [mm]
h_m		平均厚度 medium thickness of chip	
n		转速 Revolutions	$n = \frac{v_c \cdot 1000}{d \cdot \pi}$ [1/min]
r		刀具半径 Radius of cutter	
R		工件半径 Radius of workpiece	
v_c		切削速度 Cutting speed	$v_c = \frac{d \cdot \pi \cdot n}{1000}$ [m/min]
v_f	s'	进给率 Feed rate	$v_f = f_z \cdot Z \cdot n$ [mm/min]
v_{f2}	s'_2	刀尖进给 Feed rate of tool tip	
v_{f3}	s'_1	刀具中心的进给 Feed rate of tool centre	
Z		齿数 Number of teeth	
ϕs		加工切入角度 Angle of action	

H

内槽铣削

Milling of an internal groove

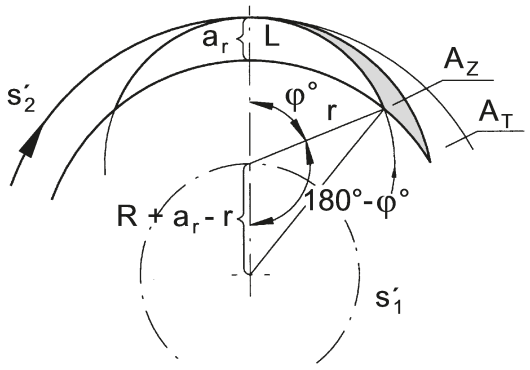

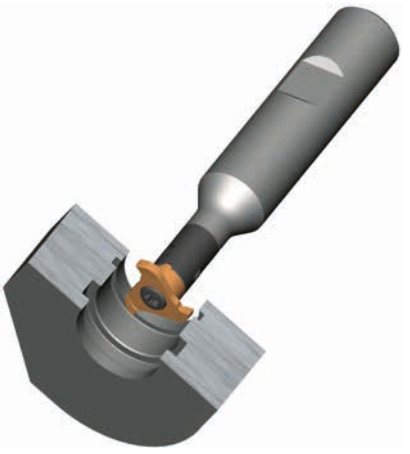

$$\cos[180° - \varphi°] = \frac{r^2 + [R + a_r - r]^2 - R^2}{2r\,[R + a_r - r]} \longrightarrow 180° - \varphi° \longrightarrow \varphi°$$

切削长度
Length of cut

$$L = \frac{\pi \cdot 2r \cdot \varphi°}{360°}\ \text{mm}$$

切屑面积
Area of chip

$$A_Z = L \cdot h_m\ \text{mm}^2$$

槽截面的面积
Area of groove section

$$A_T = \pi\,[(R + a_r)^2 - R^2]\ \text{mm}^2$$

加工时间 (用于AT)
Time for cut (for AT)

$$t = \frac{A_T}{n \cdot z \cdot A_z}\ \text{min}$$

刀具中心的进给
Feed rate of tool centre

$$s'_1 = \frac{\pi \cdot 2\,(R - r + a_r)}{t}\ \text{mm/min}$$

刀尖进给
Feed rate of tool tip

$$s'_2 = s'_1\,\frac{R + a_r}{R - r + a_r}\ \text{mm/min}$$

H

直槽铣削-外部

Milling of a linear groove - external

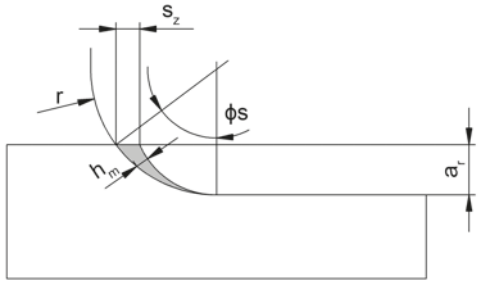

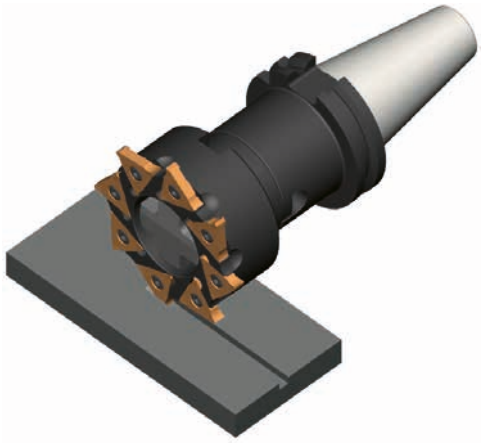

$$s_z = h_m \sqrt{\frac{2r}{a_r}}$$

$$s = n \cdot z \cdot s_z \text{ mm/min}$$

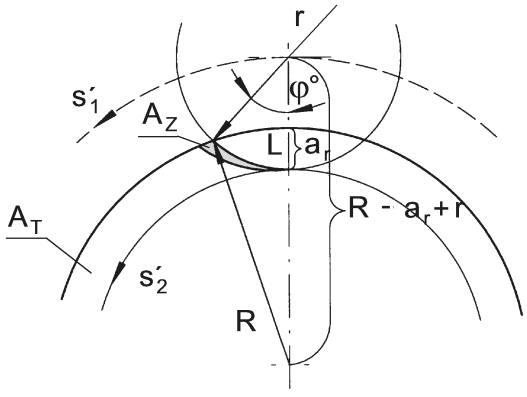

$$\cos \varphi° = \frac{r^2 + [R + r - a_r]^2 - R^2}{2r\,[R + r - a_r]} \longrightarrow \varphi°$$

切削长度
Length of cut

$$L = \frac{\pi \cdot 2r \cdot \varphi°}{360°} \text{ mm}$$

切屑面积
Area of chip

$$A_Z = L \cdot h_m \text{ mm}^2$$

槽截面的面积
Area of groove section

$$A_T = \pi\,[R^2 - (R - a_r)^2] \text{ mm}^2$$

加工时间 (用于AT)
Time for cut (for AT)

$$t = \frac{A_T}{n \cdot z \cdot A_z} \text{ min}$$

刀具中心的进给
Feed rate of tool centre

$$s'_1 = \frac{\pi \cdot 2\,(R + r - a_r)}{t} \text{ mm/min}$$

刀尖进给
Feed rate of tool tip

$$s'_2 = s'_1 \frac{R - a_r}{R + r - a_r} \text{ mm/min}$$

H

材料 Material			材料组 Material group	硬度 (HB) Hardness Brinell	抗拉强度 R_m [N/mm²] Tensile Strength	材料示例 Example Material	MG12	TI2_ TN3_
P	碳钢 Carbon steel	~ 0,2 % C	P1.1	125	430	CK15		300-160
		~ 0,4% C 退火 annealed	P1.2	190	610	19Mn6		250-170
		~ 0,4% C 调质 quenched	P1.3	210	640	36Mn5		230-170
		~ 0,6% C 退火 annealed	P1.4	190	610	C55		190-120
		~ 0,6% C 调质 quenched	P1.5	300	1000	CK60		170-120
		易切钢 Free cutting steel	P1.6	220	750	9SMn28		190-120
	合金钢 (<5%) Alloyed steel	退火 annealed	P2.1	180	590	100Cr6		180-110
		调质 quenched	P2.2	280	960	14NiCr10		160-100
		调质 quenched	P2.3	350	1250	34CrMo4		130-70
		调质 quenched	P2.4	430	1450	55Cr3		120-70
	高合金钢 (>5%) high alloyed steel	退火 annealed	P3.1	200	680	X10CrAl18		140-80
		硬化 hardened	P3.2	350	1200	X210Cr2		
	铸钢 Cast steel	非合金 unalloyed	P4.1	180	590	GE200		220-160
		合金 alloyed	P4.2	220	750	GX40CrSi28		140-80
	粉末冶金钢 Sintered steel	软质 soft	P5.1	220	570	Sint-D39		140-80
M	不锈钢Stainless steel	马氏体,铁素体 martensitic ferritic	M1.1	200	680	X16Cr13		
		奥氏体 austenitic	M1.2	300	1000	X6CrNiMo-Ti17-12-2		
		奥氏体 , 铁素体 austenitic ferritic	M1.3	230	780	X2CrNiMo-N17-13-3		
H	淬硬钢 Hardened steels	50-55 HRC	H1.1	-	-			
		55-60 HRC	H1.2	-	-			
		60-63 HRC	H1.3	-	-			
		> 63HRC	H1.4	-	-			

H

	切削速度 vc (m/min) / 起始值 Cutting speed vc (m/min) / Start values									
	AS4_ TH3_ TA4_ TF4_	AN2_ AN4_ RC2_ RC4_	EG5_	IG3_	SG3_	DD2_				
	300-160	300-180	280-140							
	250-170	280-170	230-150	280-170						
	230-170	260-160	210-150	260-160						
	190-120	200-120	180-110	200-120						
	170-120	200-120	160-110	200-120						
	190-120	200-120	180-110	200-120						
	180-110	180-110	170-100	180-110						
	160-100	180-110	160-100	180-110						
	130-70	140-80	140-80	140-80						
	120-70	100-60	120-80	100-60						
	140-80	140-80	130-70	140-80						
		-		-						
	220-160	230-140	200-140	230-140						
	140-80	150-90	140-80	150-90						
	140-80	160-100	140-80	160-100						
	120-60	150-90		150-90						
	110-60	140-80		140-80						
	90-50	120-70		120-70						

H

材料 Material			材料组 Material group	硬度 (HB) Hardness Brinell	抗拉强度 R_m [N/mm²] Tensile Strength	材料示例 Example Material	MG12	TI2_ TN3_
K	灰铸铁 Grey cast iron	低拉伸强度 low tensile strength	K1.1	180	250	GG-25		150-90
		高拉伸强度 high tensile strength	K1.2	250	350	GG-40		100-70
	球磨铸铁 Spheroidal graphite cast iron	铁素体 ferritic	K2.1	160	400	GGG-40		130-90
		珠光体 perlitic	K2.1	260	700	GGG-60		100-50
	可锻铸铁 Malleable cast iron	铁素体 ferritic	K3.1	200	400	GTW-45		120-60
		珠光体 perlitic	K3.2	260	700	GTS-55-04		140-80
	奥氏体球墨铸铁 / ADI Ausferritic spheroidal cast iron / ADI	调质 quenched	K4.1	260	800			
		调质 quenched	K4.2	350	1050			
		调质 quenched	K4.3	450	1400			
N	铝合金 Al-alloys	非热处理 not heat treatable	N1.1	30		AlMg1	550-300	
		热处理 heat treatable	N1.2	100	340	AlMgSi1	220-180	
	铸铝合金 Al-cast-alloy	< 6% Si	N2.1	80	300	AlMgSi6	220-180	
		6-10% Si	N2.2	100	320	AlSi7Mg	100-80	
		10-15 % Si	N2.3	130	450	AlSi12	120-100	
	铜合金 Copper-alloys	纯铜 Pure copper	N3.1	100	340	Cu	120-100	
		黄铜,青铜 Brass	N3.2	90	310	CuZn40Pb		
		无铅黄铜 Lead-free brass	N3.3	110	430	CuZn40		
		高强度 high strength	N3.4	300	1000	CuZn25Al5-Mn4Fe3		
	石墨 Graphite		N4.1					
S	耐热合金(铁基) Heat resistant alloy	退火 annealed	S1.1	200	670			
		硬化 hardened	S1.2	275	930			
	耐热合金 (镍基,钴基) Heat resistant alloy	退火 annealed	S2.1	250	840	Inconel 600		
		硬化 hardened	S2.2	350	1200	Inconel 713		

H

切削速度 vc (m/min) / 起始值 Cutting speed vc (m/min) / Start values									
AS4_ TH3_ TA4_ TF4_	AN2_ AN4_ RC2_ RC4_	EG5_	IG3_	SG3_	DD2_				
150-90	170-100	120-60	170-100						
100-70	120-70	100-70	120-70						
130-90	150-90	110-70	150-90						
100-50	110-70	100-50	110-70						
120-60	140-80	120-60	140-80						
140-80	150-90	140-80	150-90						
					850-650				
					350-200				
					350-200				
					230-90				
					100-70				
					100-70				
				110-80					
				60-25					
				60-25					
				60-25					

H

材料 Material			材料组 Material group	硬度 (HB) Hardness Brinell	抗拉强度 R_m [N/mm²] Tensile Strength	材料示例 Example Material	MG12	TI2_ TN3_	
S	钛 Titan	钛合金 α Titanium alloy α	S3.1	120	240				
		钛合金 α-β Titanium alloy α- β	S3.2	360	1200				
		钛合金 β Titanium alloy β	S3.3	410	1400				
O	热塑性塑料 Thermoplastics		O1.1				150 - 50		
	Duro塑料 Duro plaste		O1.2				150 - 50		
	玻璃纤维增强塑料 Plastics glass fibre reinforced	GFK	O1.3				150 - 50		
	碳纤维增强塑料 Plastics carbon fibre reinforced	CFK	O1.4				300 - 150		

H

	切削速度 vc (m/min) / 起始值 Cutting speed vc (m/min) / Start values									
	AS4_ TH3_ TA4_ TF4_	AN2_ AN4_ RC2_ RC4_	EG5_	IG3_	SG3_	DD2_				
					100-70					
					80-50					
					70-40					

H

系列System	页/Page
齿轮铣 / Gear Milling	**371**
插齿 / Gear Broaching	**383**
刮齿 / Gear Skiving	**387**
齿轮倒角 / Deburring	**393**
齿轮成形 / Gear Shaping	**395**
单点齿轮铣 / Single-Point Gear Milling	**397**
伞齿铣 / Bevel Gear Milling	**399**
5轴铣齿 / 5-Axis Milling of Gear Teeth	**403**

齿轮加工概述
Overview Gear Processes

技术 Technology	小批量 Small series	中等批量 Medium batch sizes	大批量 Large series
齿轮铣(外齿) Gear milling (external) 	+++	++	-
插齿(外齿和内齿) Gear broching (external and internal) 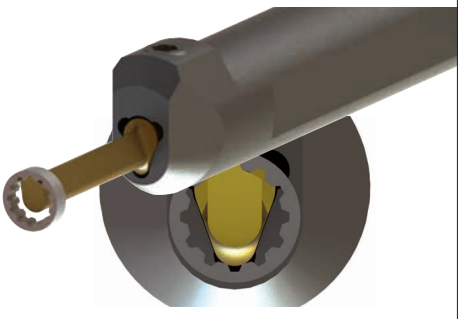	+++	++	+
刮齿 (外齿和内齿) Gear skiving (external and internal) 	-	+	+++
齿轮成形 (外齿) Gear shaping (external and internal) 	-	+	+++

I

齿轮加工概述
Overview Gear Processes

技术 Technology	小批量 Small series	中等批量 Medium batch sizes	大批量 Large series
单点齿轮铣 (外齿) Single-point gear milling (external) 	-	+++	+
伞齿铣 (外齿) Bevel gear milling (external) 	+	+	+++
5轴铣齿 (外齿) 5-Axis milling of gears (external) 	+++	-	-
齿轮倒角 Deburring of gears 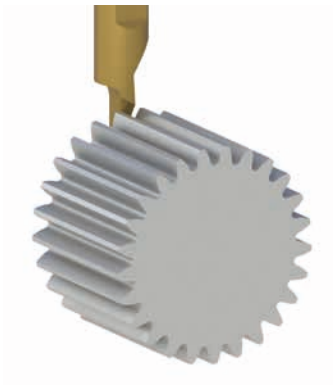	+++	+++	+++

I

用于正齿轮和齿轮轴的铣削刀片

Milling inserts for spur gears and gear shafts

圆柱齿轮/齿条 基本外形 1，符合 DIN3972 Cylindrical gears. Tooth bars Basic profile 1 according to DIN 3972	齿轮轴/轴轮毂/锯齿 DIN 5480/ANSI B92.1 Gear shafts. Shaft-hub. Serration DIN 5480/ANSI B92.1	刀片 型号 Insert Typ type	Ds [mm]
mn ≤ 0.8	mn ≤ 1 / dB ≥ 40	606	11.7
mn ≤ 1	mn ≤ 1.5 / dB ≥ 40	608	15.7
mn ≤ 1.25	mn ≤ 2 / dB ≥ 40	611	17.7
mn ≤ 1.5	mn ≤ 3 / dB ≥ 22	613	21.7
mn ≤ 2	mn ≤ 2.5 / dB ≥ 40	628	27.7
mn ≤ 2.5 / Nr. 5 - 8	mn ≤ 2.5 / dB ≥ 30	632	31.7
mn ≤ 2.25 / Nr. 2 - 8	mn ≤ 2.5 / dB ≥ 30	632	31.7
mn ≤ 2 Nr. 1 - 8	mn ≤ 2.5 / dB ≥ 30	632	31.7
mn ≤ 3	mn ≤ 3 / dB ≥ 50	635	34.7
mn ≤ 1.5	mn ≤ 2 / dB ≥ 60	636	35.7

齿轮铣

模数从 0,5 至 4 mm

GEAR MILLING

Module sizes from 0.5 up to 4 mm

I

订购示意
Ordering Example

铣刀N° Milling cutter N°	*z (N°圆柱齿轮齿数) *z (N° of teeth cylindrical gear)
1	12 - 13
2	14 - 16
3	17 - 20
4	21 - 25
5	26 - 34
6	35 - 54
7	55 - 134
8	≥ 135...齿条/Tooth bar

613.3972.100.8

- 铣刀N° / Milling cutter N° 8
- 模数 / Module 1
- DIN 3972
- 铣刀 型号 / Milling cutter type 613

I

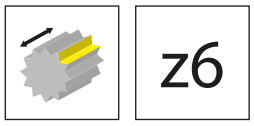

z6

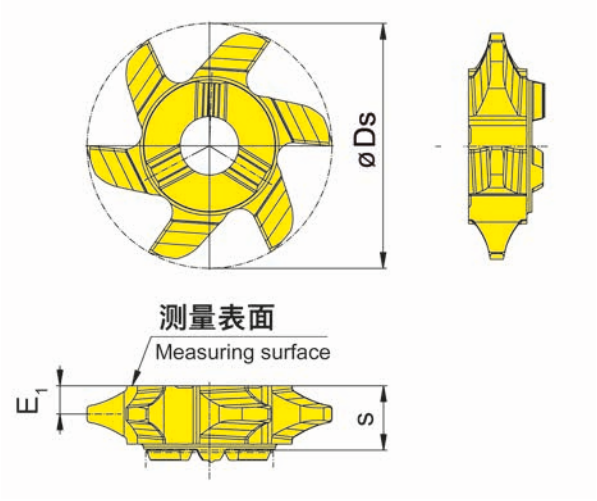

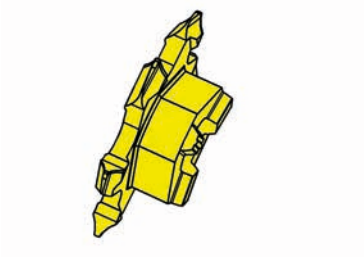

硬质合金牌号
Carbide grades

▲ 库存
on stock

Δ 4周
4 weeks

产品型号 Part number	模数 Module	z_{min}	z_{max}	E_1	s	t_{max}	Ds	HIS		AS45
613.3972.050.1	0.5	12	13	1.1	5.7	1.1	21.7	313113R		▲
613.3972.050.2	0.5	14	16	1.1	5.7	1.1	21.7	313113R		▲
613.3972.050.3	0.5	17	20	1.1	5.7	1.1	21.7	313113R		▲
613.3972.050.4	0.5	21	25	1.1	5.7	1.1	21.7	313113R		▲
613.3972.050.5	0.5	26	34	1.1	5.7	1.1	21.7	313113R		▲
613.3972.050.6	0.5	35	55	1.1	5.7	1.1	21.7	313113R		▲
613.3972.050.7	0.5	55	134	1.1	5.7	1.1	21.7	313113R		▲
613.3972.050.8	0.5	135	999	1.1	5.7	1.1	21.7	313113R		▲
613.3972.070.1	0.7	12	13	1.6	5.3	1.5	21.7	313113R		▲
613.3972.070.2	0.7	14	16	1.6	5.3	1.5	21.7	313113R		Δ
613.3972.070.3	0.7	17	20	1.6	5.3	1.5	21.7	313113R		▲
613.3972.070.4	0.7	21	25	1.6	5.3	1.5	21.7	313113R		Δ
613.3972.070.5	0.7	26	34	1.6	5.3	1.6	21.7	313113R		▲
613.3972.070.6	0.7	35	55	1.6	5.3	1.6	21.7	313113R		▲
613.3972.070.7	0.7	55	134	1.6	5.3	1.6	21.7	313113R		Δ
613.3972.070.8	0.7	135	999	1.6	5.3	1.6	21.7	313113R		Δ

P	●
M	●
K	●
N	o
S	●
H	-

压力角 20°
Pressure angle 20°

用于带渐开线齿面的圆柱齿轮的齿轮铣刀，符合 DIN 867 基本外形 1，符合 DIN 3972，用于精加工，变位系数0
Gear milling cutter for cylindrical gears with involuted flanks according to DIN 867
Basic profile 1 according to DIN 3972 for finishing, addendum shift 0

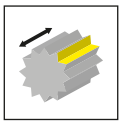

z6

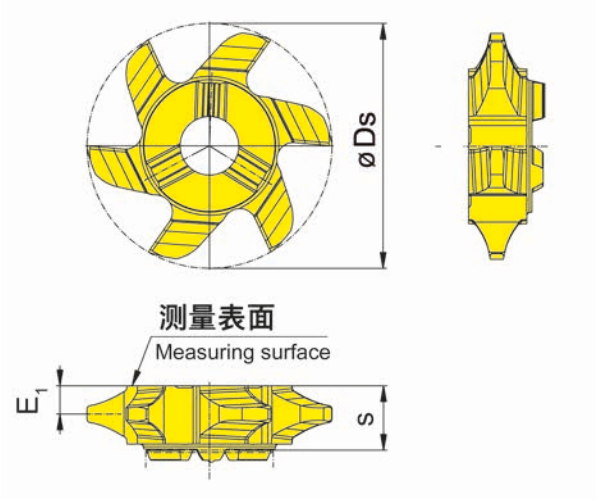

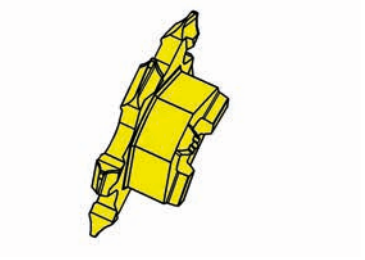

硬质合金牌号
Carbide grades

▲ 库存
on stock

Δ 4周
4 weeks

产品型号 Part number	模数 Module	z_{min}	z_{max}	E_1	s	t_{max}	Ds	HIS		AS45
613.3972.080.1	0.8	12	13	1.6	5.3	1.8	21.7	313113R		▲
613.3972.080.2	0.8	14	16	1.6	5.3	1.8	21.7	313113R		▲
613.3972.080.3	0.8	17	20	1.6	5.3	1.8	21.7	313113R		▲
613.3972.080.4	0.8	21	25	1.6	5.3	1.8	21.7	313113R		▲
613.3972.080.5	0.8	26	34	1.6	5.3	1.8	21.7	313113R		▲
613.3972.080.6	0.8	35	55	1.6	5.3	1.8	21.7	313113R		▲
613.3972.080.7	0.8	55	134	1.6	5.3	1.8	21.7	313113R		▲
613.3972.080.8	0.8	135	999	1.6	5.3	1.8	21.7	313113R		▲
613.3972.090.1	0.9	12	13	2.5	5.7	2.1	21.7	313113R		Δ
613.3972.090.2	0.9	14	16	2.5	5.7	2.1	21.7	313113R		Δ
613.3972.090.3	0.9	17	20	2.5	5.7	2.1	21.7	313113R		Δ
613.3972.090.4	0.9	21	25	2.5	5.7	2.1	21.7	313113R		Δ
613.3972.090.5	0.9	26	34	2.5	5.7	2.1	21.7	313113R		Δ
613.3972.090.6	0.9	35	55	2.5	5.7	2.1	21.7	313113R		Δ
613.3972.090.7	0.9	55	134	2.5	5.7	2.1	21.7	313113R		Δ
613.3972.090.8	0.9	135	999	2.5	5.7	2.1	21.7	313113R		Δ

压力角 20°
Pressure angle 20°

用于带渐开线齿面的圆柱齿轮的齿轮铣刀，符合 DIN 867 基本外形 1，符合 DIN 3972，用于精加工，变位系数0
Gear milling cutter for cylindrical gears with involuted flanks according to DIN 867
Basic profile 1 according to DIN 3972 for finishing, addendum shift 0

P	●
M	●
K	●
N	o
S	●
H	-

I

z6

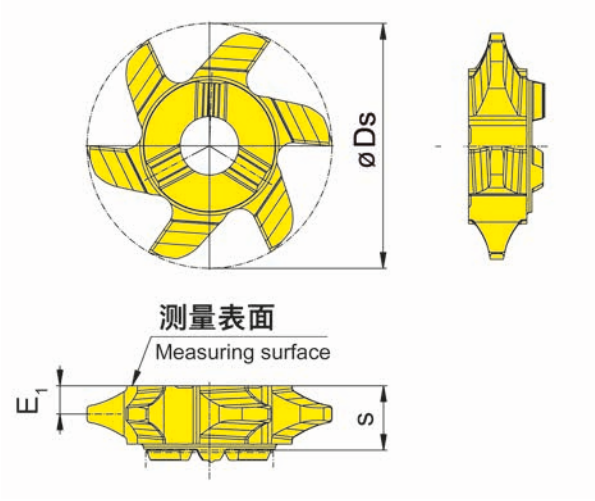

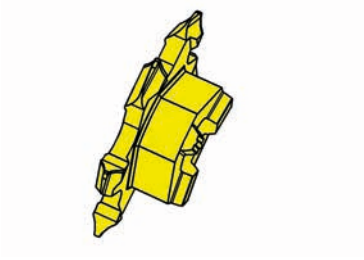

硬质合金牌号
Carbide grades

▲ 库存
on stock

Δ 4周
4 weeks

产品型号 Part number	模数 Module	z_{min}	z_{max}	E_1	s	t_{max}	Ds	HIS		AS45
613.3972.100.1	1	12	13	2.5	5.7	2.2	21.7	313113R		▲
613.3972.100.2	1	14	16	2.5	5.7	2.2	21.7	313113R		▲
613.3972.100.3	1	17	20	2.5	5.7	2.2	21.7	313113R		▲
613.3972.100.4	1	21	25	2.5	5.7	2.2	21.7	313113R		▲
613.3972.100.5	1	26	34	2.5	5.7	2.2	21.7	313113R		▲
613.3972.100.6	1	35	54	2.5	5.7	2.3	21.7	313113R		▲
613.3972.100.7	1	55	134	2.5	5.7	2.3	21.7	313113R		▲
613.3972.100.8	1	135	999	2.5	5.7	2.4	21.7	313113R		▲
613.3972.125.1	1.25	12	13	2.5	5.7	2.6	21.7	313113R		▲
613.3972.125.2	1.25	14	16	2.5	5.7	2.7	21.7	313113R		▲
613.3972.125.3	1.25	17	20	2.5	5.7	2.7	21.7	313113R		Δ
613.3972.125.4	1.25	21	25	2.5	5.7	2.7	21.7	313113R		Δ
613.3972.125.5	1.25	26	34	2.5	5.7	2.7	21.7	313113R		▲
613.3972.125.6	1.25	35	54	2.5	5.7	2.7	21.7	313113R		▲
613.3972.125.7	1.25	55	134	2.5	5.7	2.8	21.7	313113R		Δ
613.3972.125.8	1.25	135	999	2.5	5.7	2.8	21.7	313113R		▲

压力角 20°
Pressure angle 20°

用于带渐开线齿面的圆柱齿轮的齿轮铣刀，符合 DIN 867 基本外形 1，符合 DIN 3972，用于精加工，变位系数0
Gear milling cutter for cylindrical gears with involuted flanks according to DIN 867
Basic profile 1 according to DIN 3972 for finishing, addendum shift 0

P	●
M	●
K	●
N	o
S	●
H	-

I

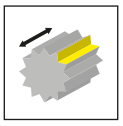

z6

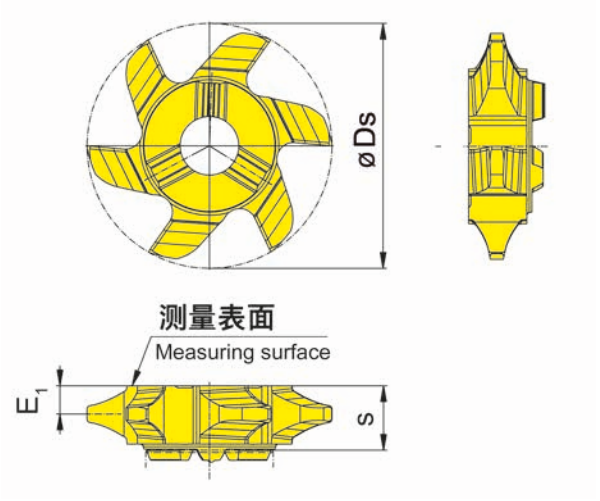

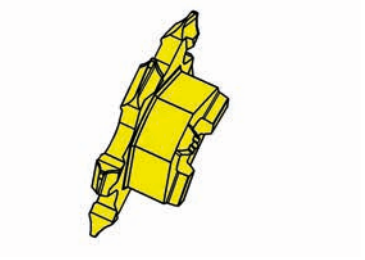

硬质合金牌号
Carbide grades

▲ 库存
on stock

Δ 4周
4 weeks

产品型号 Part number	模数 Module	z_{min}	z_{max}	E_1	s	t_{max}	Ds	HIS		AS45
613.3972.150.1	1.5	12	13	2.5	5.7	3.1	21.7	313113R		▲
613.3972.150.2	1.5	14	16	2.5	5.7	3.2	21.7	313113R		▲
613.3972.150.3	1.5	17	20	2.5	5.7	3.2	21.7	313113R		▲
613.3972.150.4	1.5	21	25	2.5	5.7	3.3	21.7	313113R		▲
613.3972.150.5	1.5	26	34	2.5	5.7	3.3	21.7	313113R		▲
613.3972.150.6	1.5	35	54	2.5	5.7	3.3	21.7	313113R		▲
613.3972.150.7	1.5	55	134	2.5	5.7	3.3	21.7	313113R		▲
613.3972.150.8	1.5	135	999	2.5	5.7	3.3	21.7	313113R		▲

P	●
M	●
K	●
N	o
S	●
H	-

压力角 20°
Pressure angle 20°

用于带渐开线齿面的圆柱齿轮的齿轮铣刀，符合 DIN 867 基本外形 1，符合 DIN 3972，用于精加工，变位系数0
Gear milling cutter for cylindrical gears with involuted flanks according to DIN 867
Basic profile 1 according to DIN 3972 for finishing, addendum shift 0

I

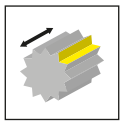

z6

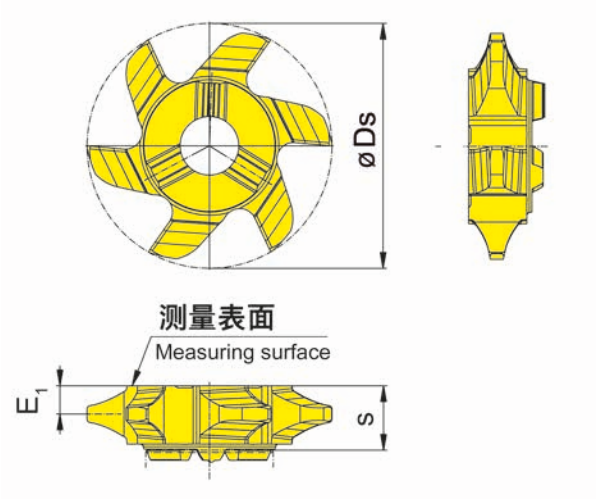

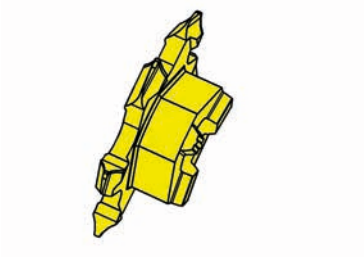

硬质合金牌号
Carbide grades

▲ 库存
on stock

Δ 4周
4 weeks

产品型号 Part number	模数 Module	z_{min}	z_{max}	E_1	s	t_{max}	Ds	HIS		AS45
628.3972.175.1	1.75	12	13	3.4	7.45	3.8	27.7	328143R		Δ
628.3972.175.2	1.75	14	16	3.4	7.45	3.8	27.7	328143R		Δ
628.3972.175.3	1.75	17	20	3.4	7.45	3.8	27.7	328143R		Δ
628.3972.175.4	1.75	21	25	3.4	7.45	3.9	27.7	328143R		Δ
628.3972.175.5	1.75	26	34	3.4	7.45	3.9	27.7	328143R		Δ
628.3972.175.6	1.75	35	54	3.4	7.45	3.9	27.7	328143R		Δ
628.3972.175.7	1.75	55	134	3.4	7.45	3.9	27.7	328143R		▲
628.3972.175.8	1.75	135	999	3.4	7.45	3.9	27.7	328143R		Δ
628.3972.200.1	2	12	13	3.4	7.45	4.2	27.7	328143R		Δ
628.3972.200.2	2	14	16	3.4	7.45	4.2	27.7	328143R		▲
628.3972.200.3	2	17	20	3.4	7.45	4.2	27.7	328143R		▲
628.3972.200.4	2	21	25	3.4	7.45	4.3	27.7	328143R		▲
628.3972.200.5	2	26	34	3.4	7.45	4.4	27.7	328143R		▲
628.3972.200.6	2	35	54	3.4	7.45	4.4	27.7	328143R		▲
628.3972.200.7	2	55	134	3.4	7.45	4.4	27.7	328143R		▲
628.3972.200.8	2	135	999	3.4	7.45	4.5	27.7	328143R		▲

P	●
M	●
K	●
N	o
S	●
H	-

压力角 20°
Pressure angle 20°

用于带渐开线齿面的圆柱齿轮的齿轮铣刀，符合 DIN 867 基本外形 1，符合 DIN 3972，用于精加工，变位系数0
Gear milling cutter for cylindrical gears with involuted flanks according to DIN 867
Basic profile 1 according to DIN 3972 for finishing, addendum shift 0

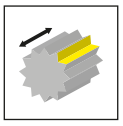

z6

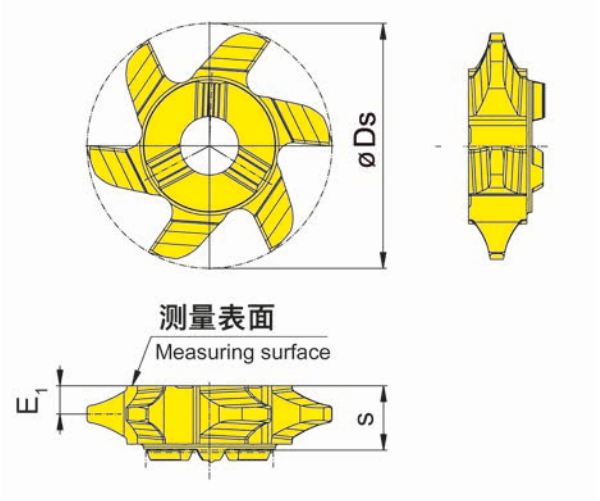

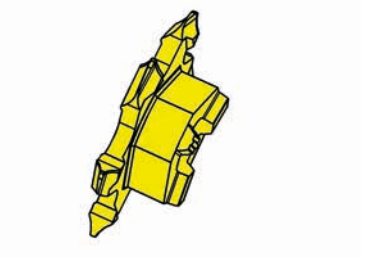

硬质合金牌号
Carbide grades

▲ 库存
on stock

Δ 4周
4 weeks

产品型号 Part number	模数 Module	z_{min}	z_{max}	E_1	s	t_{max}	Ds	HIS		AS45
632.3972.225.2	2.25	14	16	3.45	7.5	4.7	31.7	332143R		Δ
632.3972.225.3	2.25	17	20	3.45	7.5	4.8	31.7	332143R		Δ
632.3972.225.4	2.25	21	25	3.45	7.5	4.9	31.7	332143R		Δ
632.3972.225.5	2.25	26	34	3.45	7.5	4.9	31.7	332143R		Δ
632.3972.225.6	2.25	35	54	3.45	7.5	5	31.7	332143R		Δ
632.3972.225.7	2.25	55	134	3.45	7.5	5	31.7	332143R		Δ
632.3972.225.8	2.25	135	999	3.45	7.5	5	31.7	332143R		Δ
									P	●
									M	●
									K	●
									N	o
									S	●
									H	-

压力角 20°
Pressure angle 20°

用于带渐开线齿面的圆柱齿轮的齿轮铣刀，符合 DIN 867 基本外形 1，符合 DIN 3972，用于精加工，变位系数0
Gear milling cutter for cylindrical gears with involuted flanks according to DIN 867
Basic profile 1 according to DIN 3972 for finishing, addendum shift 0

I

z6

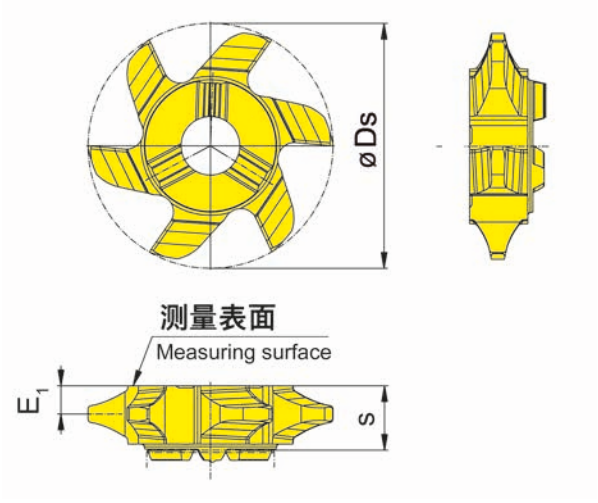

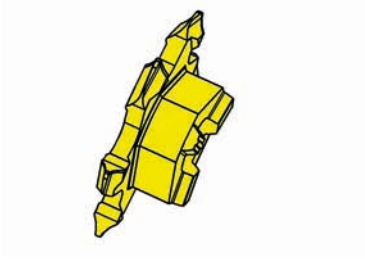

硬质合金牌号
Carbide grades

▲ 库存 on stock　　Δ 4周 4 weeks

产品型号 Part number	模数 Module	z_{min}	z_{max}	E_1	s	t_{max}	Ds	HIS		AS45
635.3972.225.1	2.25	12	13	5.5	11.9	4.7	34.7	335175R		Δ
635.3972.250.1	2.5	12	13	5.5	11.9	5.4	34.7	335175R		Δ
635.3972.250.2	2.5	14	16	5.5	11.9	5.4	34.7	335175R		Δ
635.3972.250.3	2.5	17	20	5.5	11.9	5.4	34.7	335175R		Δ
635.3972.250.4	2.5	21	25	5.5	11.9	5.5	34.7	335175R		▲
635.3972.250.5	2.5	26	34	5.5	11.9	5.5	34.7	335175R		▲
635.3972.250.6	2.5	35	54	5.5	11.9	5.5	34.7	335175R		▲
635.3972.250.7	2.5	55	134	5.5	11.9	5.7	34.7	335175R		▲
635.3972.250.8	2.5	135	999	5.5	11.9	5.7	34.7	335175R		▲
635.3972.275.1	2.75	12	13	5.5	11.9	5.7	34.7	335175R		Δ
635.3972.275.2	2.75	14	16	5.5	11.9	5.8	34.7	335175R		Δ
635.3972.275.3	2.75	17	20	5.5	11.9	5.8	34.7	335175R		Δ
635.3972.275.4	2.75	21	25	5.5	11.9	5.9	34.7	335175R		Δ
635.3972.275.5	2.75	26	34	5.5	11.9	5.9	34.7	335175R		Δ
635.3972.275.6	2.75	35	54	5.5	11.9	6	34.7	335175R		Δ
635.3972.275.7	2.75	55	134	5.5	11.9	6.1	34.7	335175R		Δ
635.3972.275.8	2.75	135	999	5.5	11.9	6.1	34.7	335175R		▲
635.3972.300.1	3	12	13	5.5	11.9	6.2	34.7	335175R		▲
635.3972.300.2	3	14	16	5.5	11.9	6.4	34.7	335175R		▲
635.3972.300.3	3	17	20	5.5	11.9	6.4	34.7	335175R		▲
635.3972.300.4	3	21	25	5.5	11.9	6.4	34.7	335175R		▲
635.3972.300.5	3	26	34	5.5	11.9	6.5	34.7	335175R		▲
635.3972.300.6	3	35	54	5.5	11.9	6.5	34.7	335175R		▲
635.3972.300.7	3	55	134	5.5	11.9	6.6	34.7	335175R		▲
635.3972.300.8	3	135	999	5.5	11.9	6.6	34.7	335175R		▲

P	●
M	●
K	●
N	o
S	●
H	-

压力角 20°
Pressure angle 20°

用于带渐开线齿面的圆柱齿轮的齿轮铣刀，符合 DIN 867 基本外形 1，符合 DIN 3972，用于精加工，变位系数0
Gear milling cutter for cylindrical gears with involuted flanks according to DIN 867
Basic profile 1 according to DIN 3972 for finishing, addendum shift 0

芯轴刀柄式铣刀
Arbour Mounted Cutter

M279

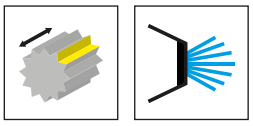

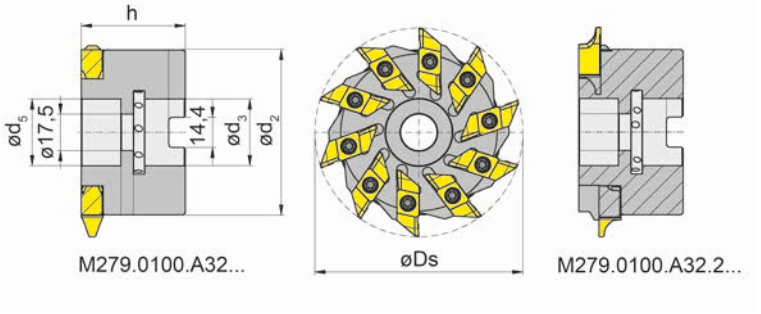

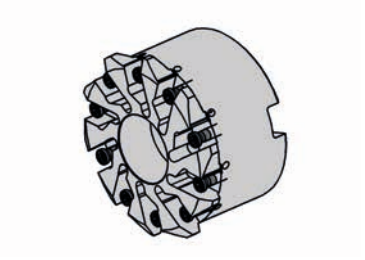

图示=右手型
Picture = right hand cutting version

产品型号 Part number	Z	Ds	h	d_5	d_2	d_3	HWS
M279.0100.A32.10.10.IK	10	100	50	17.5	79	32	279105R
M279.0100.A32.2.10.05.IK	10	100	50	17.5	79	32	279105R • 279105L

I

配件
Spare Parts

芯轴刀柄式铣刀 Arbour Mounted Cutter	锁紧螺钉 Clamping Screw	TORX PLUS®扳手 TORX PLUS® Wrench
M279...	**030.0516.T20P**	**T20PQ**

RS279

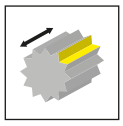

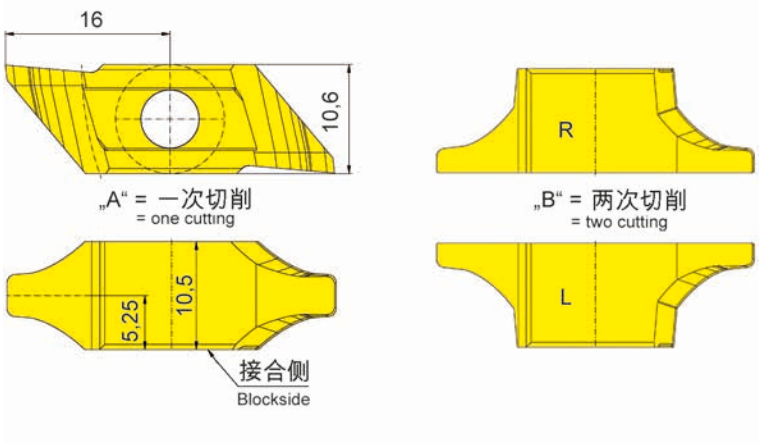

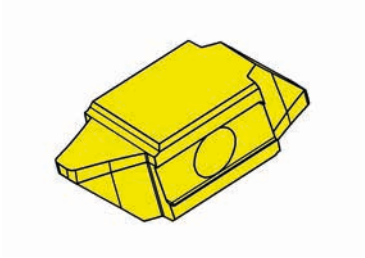

硬质合金牌号
Carbide grades

▲ 库存
on stock

Δ 4周
4 weeks

产品型号 Part number	模数 Module	z_{min}	z_{max}	E_1	s	t_{max}	Z	形式 Form	HIS		AS45
RS279.3972.325.1	3.25	12	13	5.25	10.5	6.7	2	A	279105R		Δ
RS279.3972.325.2	3.25	14	16	5.25	10.5	6.8	2	A	279105R		Δ
RS279.3972.325.3	3.25	17	20	5.25	10.5	7	2	A	279105R		Δ
RS279.3972.325.4	3.25	21	25	5.25	10.5	7	2	A	279105R		Δ
RS279.3972.325.5	3.25	26	24	5.25	10.5	7.1	2	A	279105R		Δ
RS279.3972.325.6	3.25	35	54	5.25	10.5	7.2	2	A	279105R		Δ
RS279.3972.325.7	3.25	55	134	5.25	10.5	7.2	2	A	279105R		Δ
RS279.3972.325.8	3.25	135	999	5.25	10.5	7.2	2	A	279105R		Δ
RS279.3972.350.1L	3.5	12	13	5.25	10.5	7.35	2	B	279105L		Δ
RS279.3972.350.1R	3.5	12	13	5.25	10.5	7.35	2	B	279105R		Δ
RS279.3972.350.2L	3.5	14	16	5.25	10.5	7.45	2	B	279105L		Δ
RS279.3972.350.2R	3.5	14	16	5.25	10.5	7.45	2	B	279105R		Δ
RS279.3972.350.3	3.5	17	20	5.25	10.5	7.4	2	A	279105R		Δ
RS279.3972.350.4	3.5	21	25	5.25	10.5	7.5	2	A	279105R		Δ
RS279.3972.350.5	3.5	26	34	5.25	10.5	7.65	2	A	279105R		Δ
RS279.3972.350.6	3.5	35	54	5.25	10.5	7.7	2	A	279105R		Δ
RS279.3972.350.7	3.5	55	134	5.25	10.5	7.8	2	A	279105R		Δ
RS279.3972.350.8	3.5	135	999	5.25	10.5	7.8	2	A	279105R		Δ

P	●
M	●
K	●
N	o
S	●
H	-

压力角 20°
Pressure angle 20°

用于带渐开线齿面的圆柱齿轮的齿轮铣刀，符合 DIN 867 基本外形 1，符合 DIN 3972，用于精加工，变位系数0
Gear milling cutter for cylindrical gears with involuted flanks according to DIN 867
Basic profile 1 according to DIN 3972 for finishing, addendum shift 0

RS279

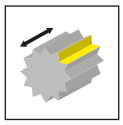

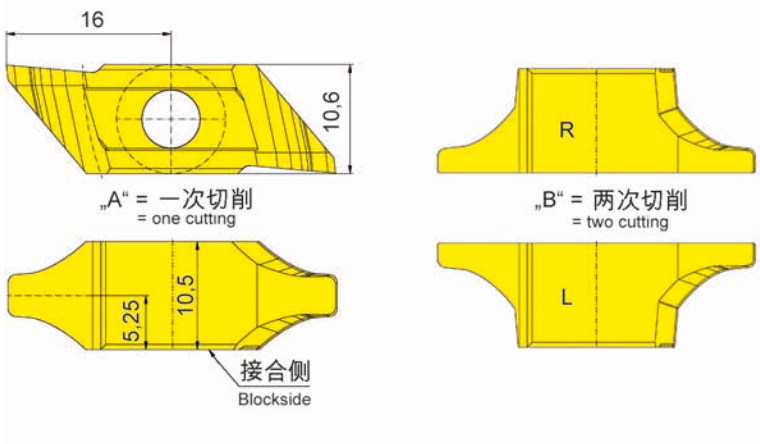

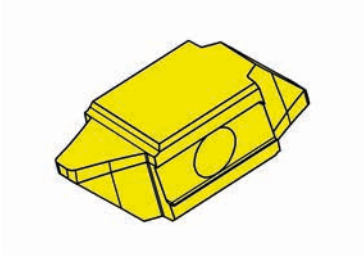

硬质合金牌号
Carbide grades

▲ 库存
on stock

Δ 4周
4 weeks

产品型号 Part number	模数 Module	z_{min}	z_{max}	E_1	s	t_{max}	Z	形式 Form	HIS		AS45
RS279.3972.375.1L	3.75	12	13	5.25	10.5	7.8	2	B	279105L		Δ
RS279.3972.375.1R	3.75	12	13	5.25	10.5	7.8	2	B	279105R		Δ
RS279.3972.375.2L	3.75	14	16	5.25	10.5	7.85	2	B	279105L		Δ
RS279.3972.375.2R	3.75	14	16	5.25	10.5	7.85	2	B	279105R		▲
RS279.3972.375.3L	3.75	17	20	5.25	10.5	8	2	B	279105L		Δ
RS279.3972.375.3R	3.75	17	20	5.25	10.5	8	2	B	279105R		Δ
RS279.3972.375.4L	3.75	21	25	5.25	10.5	8.1	2	B	279105L		▲
RS279.3972.375.4R	3.75	21	25	5.25	10.5	8.1	2	B	279105R		Δ
RS279.3972.375.5	3.75	26	34	5.25	10.5	8.1	2	A	279105R		Δ
RS279.3972.375.6	3.75	35	54	5.25	10.5	8.2	2	A	279105R		Δ
RS279.3972.375.7	3.75	55	134	5.25	10.5	8.3	2	A	279105R		Δ
RS279.3972.375.8	3.75	135	999	5.25	10.5	8.35	2	A	279105R		Δ
RS279.3972.400.1L	4	12	13	5.25	10.5	8.3	2	B	279105L		Δ
RS279.3972.400.1R	4	2	13	5.25	10.5	8.3	2	B	279105R		Δ
RS279.3972.400.2L	4	14	16	5.25	10.5	8.4	2	B	279105R		Δ
RS279.3972.400.2R	4	14	16	5.25	10.5	8.4	2	B	279105R		Δ
RS279.3972.400.3L	4	17	20	5.25	10.5	8.55	2	B	279105L		Δ
RS279.3972.400.3R	4	17	20	5.25	10.5	8.55	2	B	279105R		Δ
RS279.3972.400.4L	4	21	25	5.25	10.5	8.65	2	B	279105L		Δ
RS279.3972.400.4R	4	21	25	5.25	10.5	8.65	2	B	279105R		Δ
RS279.3972.400.5L	4	26	34	5.25	10.5	8.75	2	B	279105R		Δ
RS279.3972.400.5R	4	26	34	5.25	10.5	8.75	2	B	279105R		Δ
RS279.3972.400.6L	4	35	54	5.25	10.5	8.8	2	B	279105L		Δ
RS279.3972.400.6R	4	35	54	5.25	10.5	8.8	2	B	279105R		Δ
RS279.3972.400.7	4	55	134	5.25	10.5	8.8	2	A	279105R		Δ
RS279.3972.400.8	4	135	999	5.25	10.5	8.9	2	A	279105R		Δ

P	●
M	●
K	●
N	o
S	●
H	-

压力角 20°
Pressure angle 20°

用于带渐开线齿面的圆柱齿轮的齿轮铣刀，符合 DIN 867 基本外形 1，符合 DIN 3972，用于精加工，变位系数0
Gear milling cutter for cylindrical gears with involuted flanks according to DIN 867
Basic profile 1 according to DIN 3972 for finishing, addendum shift 0

插齿

模数最大至5

GEAR BROACHING

Up to module 5

示例: Supermini
Example:

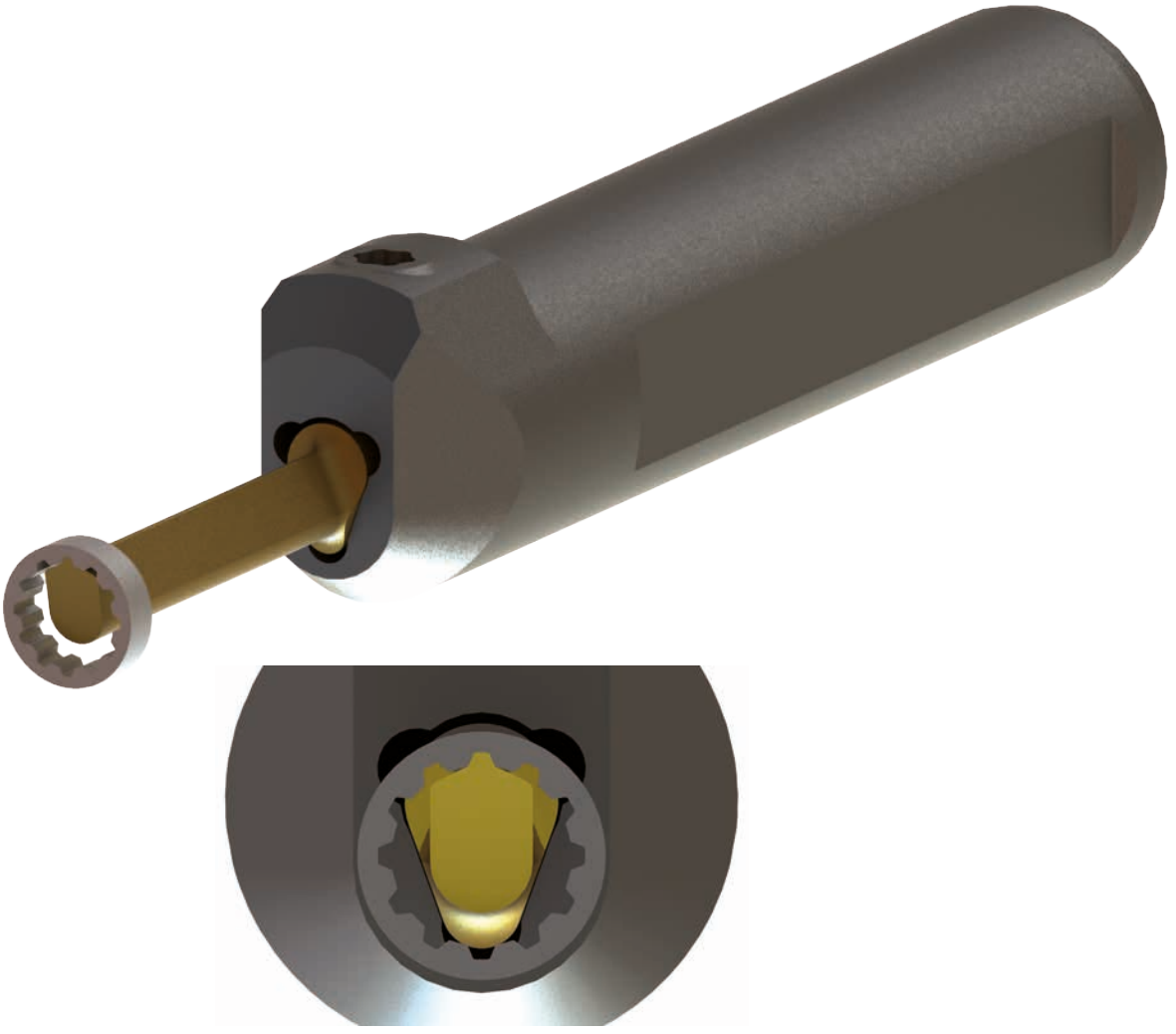

刀片
Insert

N105
N110
S117

类型 Type	模数 m_n ma. Module size m_n	最小齿顶圆 min. tip circle for ring gear	最大长度 max. length of flank
N105	1.5	4	20
N110	1.5	5	40
S117	5	14	-

优点:
- 根据应用设计非标刀具
- 结合插削单元,实现高效加工
- 在一台机器上完成加工
- 最大模数 5 mm
- 交货时间短

Advantages:
- Special tools designed for your application
- High productivity in combination with broaching devices
- Finishing on one machine
- Up to module 5 mm
- Short delivery times

I

刮齿

模数从0.2至8

GEAR SKIVING

Gear teeth from module 0.2 mm up to module 8 mm

产品范围 WSA:

- 从 Modul m = 0.2 mm 逐步减少
- 从 d = 7 mm
- 最大至模数 m = 1 mm
- 最大至 d = 30 mm
- 整硬
- 可重磨

Product range WSA:

- From module mn = 0.2 mm with step cut
- From d = 7 mm
- Up to module m = 1
- Up to d = 30 mm
- Solid carbide version
- Resharpenable
- Head cutting if required (patented)

产品范围 WSR:

- 精密的接口,保证高的同心 (专利)
- 可替换刀片系统, 最高模数 mn = 4 mm
- 从 d= 25 mm
- 可调整内冷供应
- 库存不同长度的标准刀杆

Product range WSR:

- Precision interface for high concentricity (patented)
- Interchangeable insert systems up to module m_n = 4 mm
- From d = 25 mm
- Adjustable coolant supply
- Standard shanks of different lengths from stock

刮齿刀杆
Gear Skiving Holder

MDR

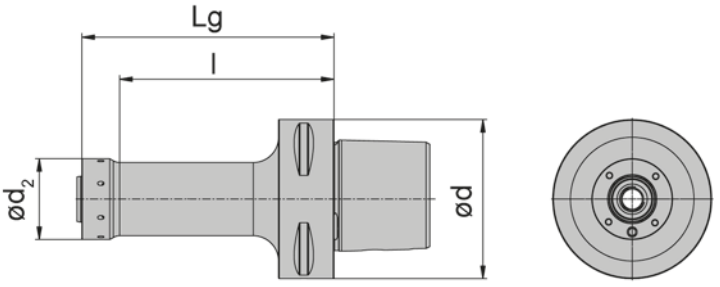

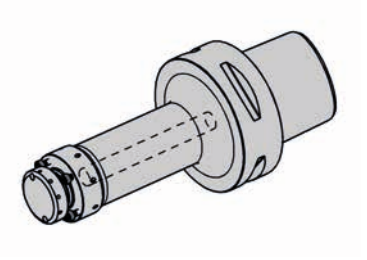

产品型号 Part number	l	Lg	d	d_2	冷却 Coolant	尺寸规格 Size
MDR.044.C6.060.W	45	60	63	32	D	04
MDR.044.C6.080.W	65	80	63	32	D	04
MDR.044.C6.100.W	85	100	63	32	D	04
MDR.044.HSKT063.060.W	45	60	63	32	D	04
MDR.044.HSKT063.100.W	85	100	63	32	D	04
MDR.052.C6.060.W	45	60	63	39	D	05
MDR.052.C6.100.W	85	100	63	39	D	05
MDR.052.HSKT063.060.W	45	60	63	39	D	05
MDR.052.HSKT063.100.W	85	100	63	56	D	05
MDR.081.C6.060.W	45	60	63	56	D	08
MDR.081.C6.100.W	77	100	63	56	D	08
MDR.081.C6.125.W	102	125	63	56	D	08
MDR.081.C8.060.W	45	60	80	56	D	08
MDR.081.C8.100.W	77	100	80	56	D	08
MDR.081.C8.125.W	102	125	80	56	D	08
MDR.081.HSKT063.060.W	45	60	63	56	D	08
MDR.081.HSKT063.100.W	77	100	63	56	D	08
MDR.081.HSKT063.125.W	102	125	63	56	D	08
MDR.081.HSKT100.125.W	102	125	100	56	D	08

柄是专为WSR齿轮削片系统设计的，并与DR扩孔刀片兼容。带有内部冷却剂供应“D”的标准版本。通过用可选的冷却分配器替换冷却头堵头，柄可以转换为冷却供应版本“A”。

The shanks are designed for the WSR Gear Skiving System and are compatible with DR reaming inserts. Standard version with internal coolant supply „D“. By replacing the coolant plug with the optionally available coolant distributor, the shanks can be converted to coolant supply version „A“.

配件
Spare Parts

刮齿刀杆 Gear Skiving Holder	螺钉 Screw	TORX 扳手 Torx Wrench
MDR....	**C00 90 02**	**T8L**
MDR.081...	**C00 90 04**	**T15Q**

内冷设计
Internal coolant supply design

版本“D“ - 配密封塞
Version "D" - with Sealing plug

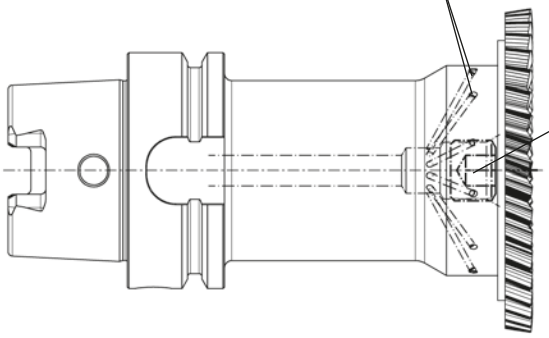

系列System	密封塞 Sealing plug
MDR044	10.1.08.913
MDR052	12.1.12.913
MDR081	16.1.12.913

版本 “A” - 配冷却分配器
Version "A" - with Coolant distributor

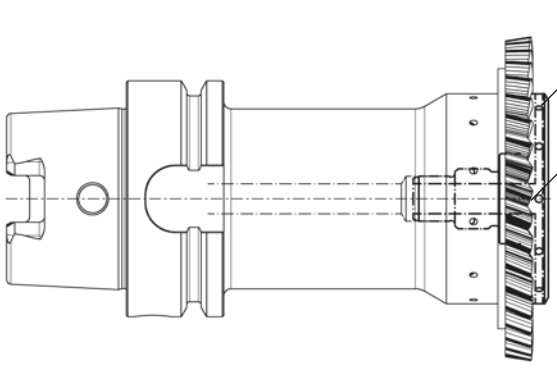

系列System	内冷分配器 Coolant distributor
MDR044	020.2510.6506
MDR052	020.3216.6505
MDR081	020.5616.6246

冷却管 Coolant tube	刀杆系列 for System Holder
020.4012.1306	HSK-A 40
020.5016.1307	HSK-A 50
020.6318.1308	HSK-A 63
020.0024.1310	HSK-A 100

产品范围 M117:

- 可替换刀片系列,最高模数 8
- 可替换刀片,自定心刀片座
- 不同的接口的芯轴版本
- 根据机械加工应用，集成冷却供应

Product range M117:

- Interchangeable insert system up to module 8
- Interchangeable insert with self-centring insert seat
- Arbour version with different adapters
- With integrated coolant supply depending on the machining application

I

齿轮倒角

DEBURRING OF GEARS

圆柱齿轮的倒角允许在一台机器上以精确的几何形状进行完整的加工。工件和工具的同步旋转允许短的加工时间，即使是带台阶的齿轮。刀具为每个齿轮精确设计的，并确定了工艺数据。

The chamfering of spur gears allows complete machining on one machine with exact geometries. Synchronized rotation of workpiece and tool allow short machining times, even for gears with shoulders. The tool is designed exactly for each gear and the process data is determined.

加工示例	Machining example
材料: 1.7137 / 16MnCr5	Material: 1.7137 / 16MnCr5
齿数: 25	Number of teeth: 25
模数: 1.25	Module: 1.25
加工时间: 8 s	Cycle time: 8 s
Vc: 200 m/min	Cutting speed: 200 m/min
f: 150 mm/min	f: 150 mm/min

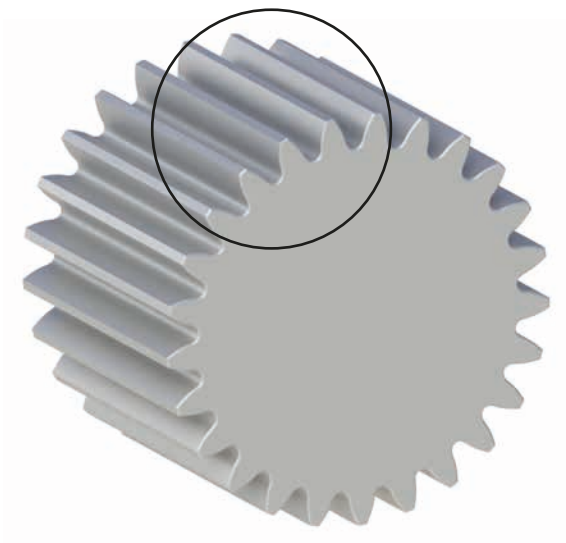

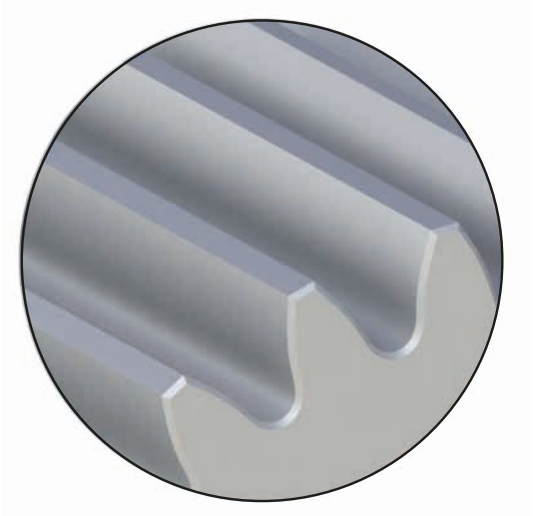

齿轮成形

内齿和外齿

GEAR SHAPING

For external and internal gears

齿轮成形
Gear Shaping

- 为您的应用设计的特殊工具
- 内齿及外齿
- 用于渐开线和平行花键
- 特殊齿形
- 模数从0.2 mm 至 5 mm
- 必要时包括工具和工艺设计

- Special tools designed for your application
- For external and internal gears
- For involute and parallel splines
- For special profiles
- From module size 0.2 mm to 5 mm
- Tool incl. process design

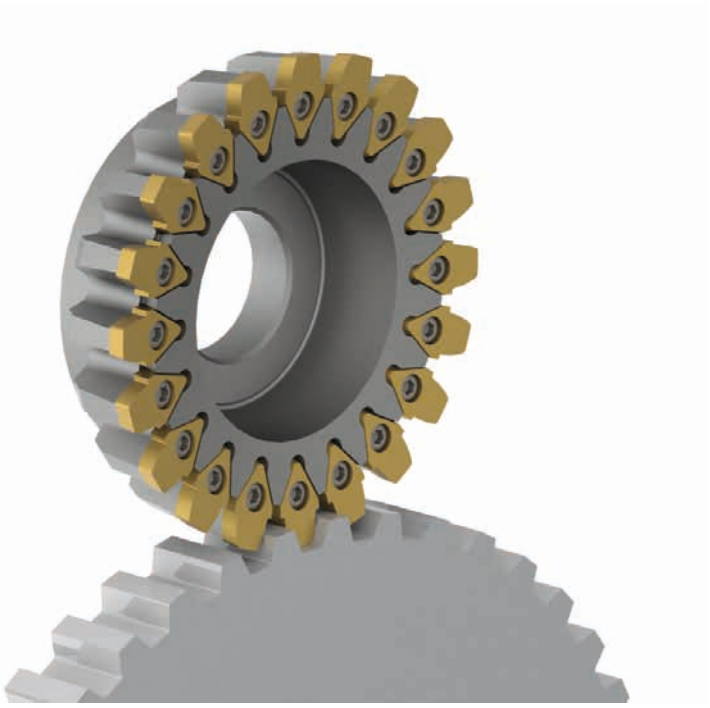

I

单点齿轮铣

更少的刀具移动的工艺过程

SINGLE-POINT GEAR MILLING

Process with fewer tool movements

单点齿轮铣
Single-point Gear Milling

单点齿轮铣削是工件和刀具以给定速比旋转的加工过程。刀具被设置在与工件的固定角度上。主轴和刀具同步运行是很重要的。
除了凸齿齿轮和直齿圆柱齿轮外，该工艺还可以有效地生产渐开线齿轮或花键齿轮。几乎所有的HORN铣削系统都可以用于此方法。
该工艺的优点是减少了刀具移动，因为所有齿都在一次通过中产生。该工艺可以在几乎所有的车铣中心中实施，因此是普遍适用的。

Single-point gear milling is a machining process in which the workpiece and the tool rotate at a given speed ratio. The tool is set at a fixed angle to the workpiece. It is important that the spindle and tool run in synchrony with each other.
The process can be used to efficiently produce involute or spline gears in addition to crown and spur gears. Almost all HORN milling systems can be used for this purpose.
The advantages of the process are reduced tool movements as all tooth spaces are produced in one pass. The process can be implemented on almost all turn-mill centres and is therefore universally applicable.

花键
材料: 1.7137 / 16MnCr5 齿数: 36
模数: 0.5
加工时间: 10 s
Vc: 150 m/min
fz: 0,1 mm / Z

Spline gearing
Material: 1.7137 / 16MnCr5
Number of teeth: 36
Module: 0.5
Cycle time:15 s
Cutting speed: 150 m/min
f_z: 0,1 mm / Z

伞齿铣

模数从0.6至4

BEVEL GEAR MILLING

From module 0.6 mm up to module 4 mm

产品范围包括用于制造外摆线纵齿形状和恒定齿高的螺旋锥齿轮的工具。其他特殊要求齿形的测试。
以客户零件为基础，配合INDEX进行齿轮加工工艺设计，包括所有加工参数。刀具几何和刀具参数协调的定义取决于工件材料，其目的是实现高工件精度和节约加工时间。
前和后加工一个定位，使与所有功能相关的特征在同一装夹下加工，以实现最大精度的目标。在通用机器上,从毛胚到锥齿轮。

产品范围:
我们的产品范围包括具有HSK-T40和HSK-T63接口的铣刀在各种飞行圈和齿列/齿轮速度。
一套刀具可用于不
同的模数和锥齿轮尺寸。
两种不同的刀片尺寸可覆盖齿轮齿尺寸从模数m = 0.6 mm到模数m = 4 mm。

The product range includes tools for the manufacture of spiral bevel gears with epicycloidal longitudinal tooth shape and constant tooth height. Other tooth forms require special testing.
The design of the gear cutting process including all machining parameters is carried out in cooperation with Index based on the customer's component. The definition of the tool geometry and coordination of the tool parameters depends on the workpiece material and is carried out with the aim of achieving high workpiece accuracy and economical machining time.
Front and rear machining in one set-up enables complete machining with all functionally relevant features are machined in one clamping with the aim of achieving maximum precision. Bevel gears from bar on universal machines.

Product range:
Our product range includes milling cutters with HSK-T40 and HSK-T63 interfaces in various flight circles and tooth rows/gear speeds. One set of cutters can be used for different modules and bevel gear dimensions.
Two different insert sizes cover gear tooth sizes from module m = 0.6 mm to module m = 4 mm.

该刀具程序已装载在INDEX机床上，并包括以下:

- 铣刀盘，HSK-T40或HSK-T63接口
- 刀盘分为内刀和外刀- 1侧面加工，在校正时更高的精度和灵活性
- 内部和外部刀具的刀体相同
- 2个尺寸刀片系统对应不同的模数大小
- 系统顺时针或逆时针旋转
- 适配刀盘，使刀具适应不同直径/飞行圆半径
- 通过使用各种塞片调整外半径和内半径的偏心，灵活地修正齿的纵向形状
- 配合不同材料的硬质合金

The tool program has been adapted to Index machines and includes the following:

- Milling body with HSK-T40 or HSK-T63 interface
- Separate cutter head for inside and outside cutters – 1 flank machining for higher precision and flexibility when making corrections
- Identical body for the internal and external cutters
- System inserts in 2 sizes for different module sizes
- Systems for clockwise or counter-clockwise rotation
- Adapter discs for adapting the tools to different diameters / flight circle radii
- Flexible correction of the longitudinal shape of the tooth by adjusting the eccentricity of the outer and inner radius using various spacer plates
- Coordinated substrates for different materials

5轴铣齿

5-AXIS MILLING OF GEAR TEETH

DGVZ

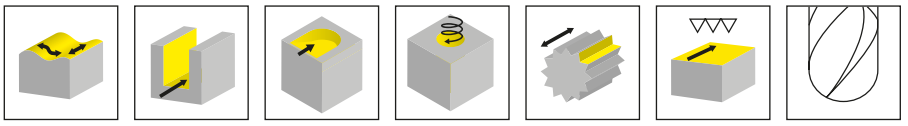

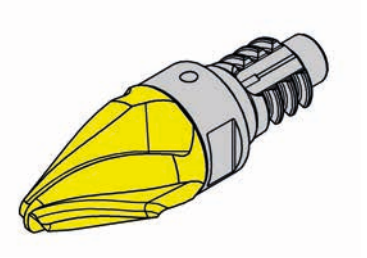

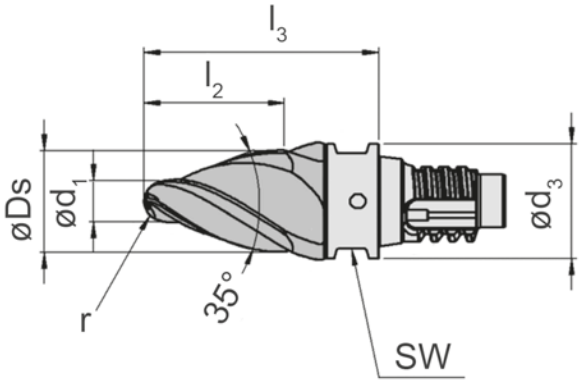

硬质合金牌号
Carbide grades

▲ 库存
on stock

Δ 4周
4 weeks

产品型号 Part number	系列 System	SW	Z	Ds	d	r	l_3	d_1	a_p	HIS		AN2P
DGVZ.4.10.35.15.00	DG10	8	4	10	9.8	1.5	21	2.86	12.3	DG0101		▲
DGVZ.4.12.35.20.00	DG12	10	4	12	11.7	2	24	3.82	14.3	DG0121		▲
DGVZ.6.16.35.30.00	DG16	13	6	16	15.6	3	32	5.72	18.4	DG0161		▲
DGVZ.6.20.35.50.00	DG20	17	6	20	19.5	5	37	9.54	20.09	DG0201		▲

P	●
M	o
K	-
N	-
S	-
H	-

注意:
本章只包含齿轮精加工工具。DAH系统的粗加工工具请参见第K章，DG和DS系统的粗加工工具请参见我们的整体硬质合金铣刀样本
Note:
This chapter contains only the finishing tools for gears. The tools for roughing System DAH can be found in chapter K, for systems DG and DS please see our catalogue SOLID CARBIDE MILLS

I

模数 30 直槽, 可达 Ø 4000 mm

Module 30 straight fluted, up to Ø 4000 mm

粗加工高进给铣削/精加工高仿形铣削

Roughing high feed milling / Finishing copy milling

DAHM.37

DGH

模数 13.56
Module 13.56

粗加工快进给铣削 / 精加工仿形铣削
Roughing high feed milling / Finishing copy milling

DGH

DSDS

I

材料 Material	刀具 Tools	Ds [mm]	v_c [m/min]	加工中心 Machining centre
C45	DGH	12/16	300	5 轴 / 5-axis
C45	DSDS	8	200	5 轴 / 5-axis
C45	DSK	10	190	5 轴 / 5-axis
C45	DSM	12	260	5 轴 / 5-axis

轴向模数 7.9 / Ø 420 mm

Axial module 7.9 / Ø 420 mm

常规粗加工/精加工仿形铣削

Roughing conventionally / Finishing copy milling

DPTP DSK DPTR

材料 Material	刀具 Tools	Ds [mm]	v_c [m/min]	Q [cm^3/min]	加工中心 Machining centre
CuSn12Ni	DPTP	8	200	145	5 轴 / 5-axis5-axis
CuSn12Ni	DSK	8	225	80	5 轴 / 5-axis5-axis
CuSn12Ni	DPTR	6	225		5 轴 / 5-axis5-axis

齿轮加工技术咨询
Technical Enquiry Gear Machining

加工技术 / Machining technology

o 刮齿 Gear Skiving	o 齿轮铣削 Gear milling	o 齿轮拉削 Gear broaching

工件参数 / Workpiece data

工件图纸编号 Workpiece drawing no.		
材料 Material	硬度 hardened	
基准齿条 Basic rack		
法向模数 / 直径节距 Normal module / diametral pitch		
法向压力角 Normal pressure angle		
齿数 Number of teeth		
螺旋角 ß (°) Helix angle		
螺旋方向 Helix direction		
齿顶直径-Ø Tip diameter	min	max
齿根直径-Ø d_f (mm) Root diameter	min	max
Fußformkreis-Ø d_Ff (mm) 齿根直径 或者/or	min	max
齿根半径 ǫ_f (mm) Tooth root radius	min	max
齿高h_k (mm) Height of semi topping		
齿顶直径-Ø d_Fa (mm) Tip form diameter		
刀具刀尖圆弧半径 PO (mm) Tool tip radius		

检测类型 / Measuring type

请选择! Please choose!		
2球体之间的测量 M_dK (mm) Measurement between 2 balls	min	max
2滚柱之间的测量 M_dr Measurement between 2 rolls	min	max
跨棒距 Base tangent lenght	min	max
齿厚 Tooth thickness	min	max
间隙宽度 Gap width	min	max
测球直径-Ø (mm) Measuring body Ø		

附加齿轮参数 / Additional gear parameters

粗加工 / 精加工 (余量) Roughing / finishing (stock)		
顶部避空/ 根部避空 / K型图 Tip relief / root relief / K-chart	是 yes	否 no
凸角 Protuberance	是 yes	否 no
轮廓修型 /长度修型 Profile crowning / length crowning	是 yes	否 no

公司 / Company

经销商 / Distributor

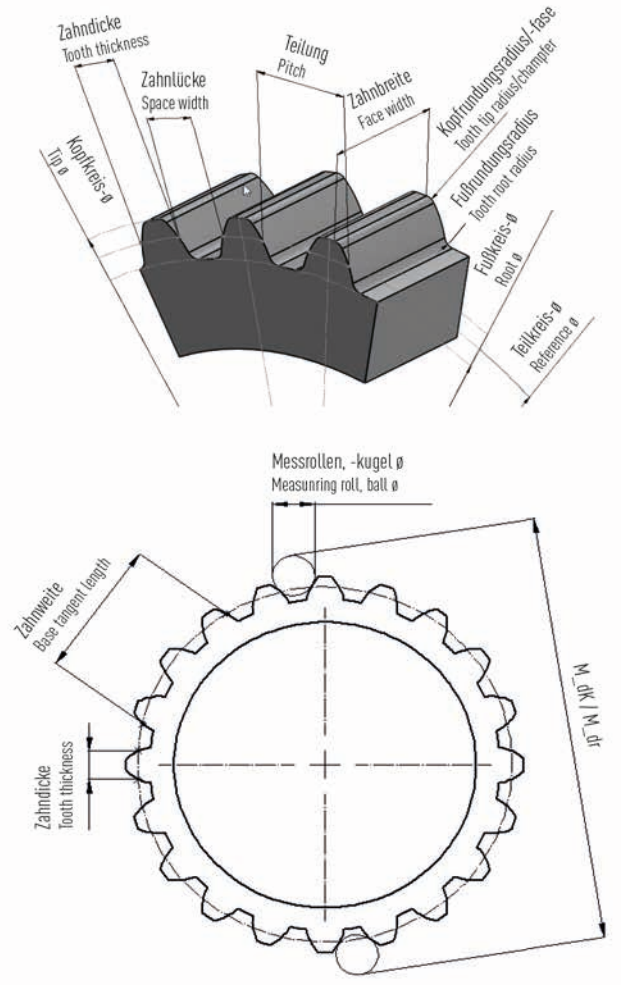

加工参数/ Machine data

主轴接口 Spindle connection		
铣床主轴旋转角度 Swivel angle of milling spindle	+	-
最大转速 (同步) Maximum revolution (synchronized)		

注意事项/ Notes

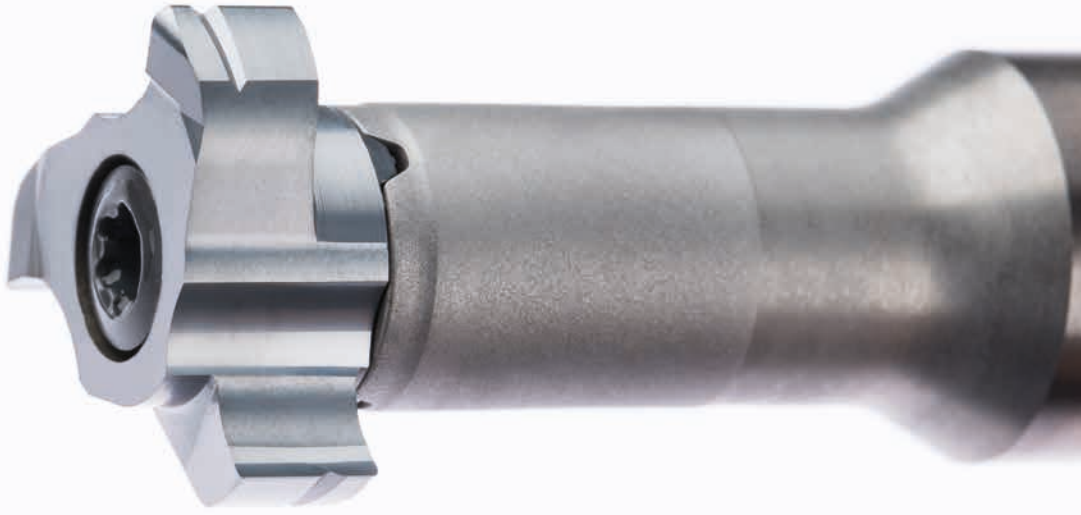

系列/System	页/Page
M311	**410**
M313	**416**
M328	**420**
M406/M409	**426**

J

铣刀杆
Milling shank
M311

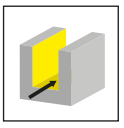

页/Page
412

刀片
Insert
311

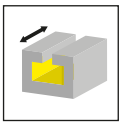

页/Page
413-414

J

M311

T型槽铣刀

带可转位刀片

切削刃自Ø 17 mm

T-Slot Cutter with exchangeable inserts

from cutting edge Ø 17 mm

J

M311

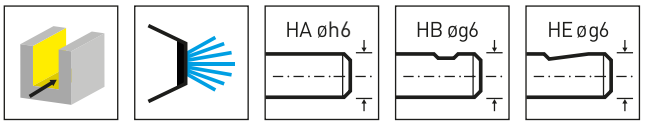

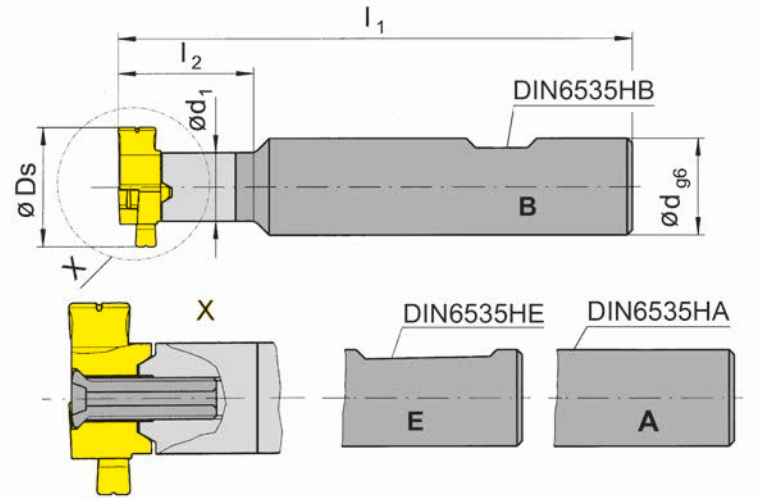

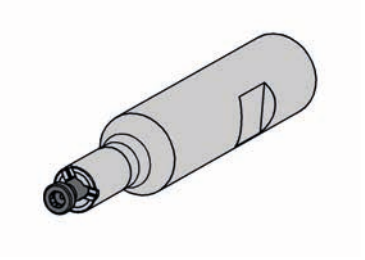

图示=右手型
Picture = right hand cutting version

产品型号 Part number	d	l_1	l_2	d_1	形式 Form	HWS
M311.0016.00A	16	90	25	9	A	311090R
M311.0016.00B	16	90	25	9	B	311090R
M311.0016.00E	16	90	25	9	E	311090R

Ds见刀片
Ds see inserts

J

配件
Spare Parts

铣刀杆 Milling shank	锁紧螺钉 Clamping Screw	TORX PLUS®扳手 TORX PLUS® Wrench
M311...	**4.16T15KP**	**T15PQ**

z3

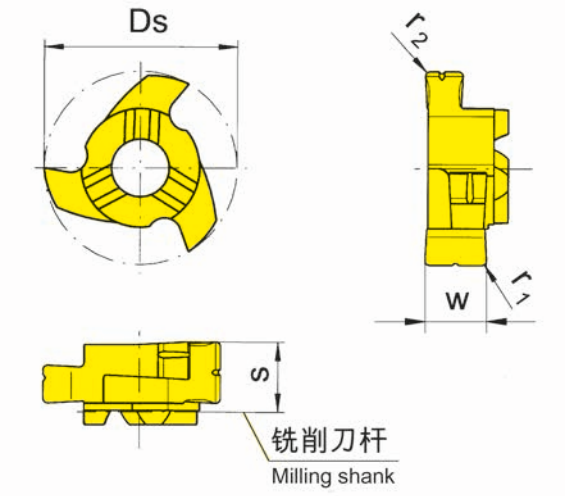

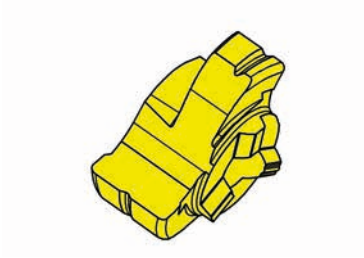

图示=右手型
Picture = right hand cutting version

硬质合金牌号
Carbide grades

▲ 库存
on stock

Δ 4周
4 weeks

产品型号 Part number	Ds	s	w	r_1	r_2	a	HIS		AS45	TI25
311.1016.00	17	7.7	7.2	0.5	0.8	10	311090R		▲	▲
								P	●	●
								M	●	●
								K	●	●
								N	o	●
								S	●	●
								H	-	-

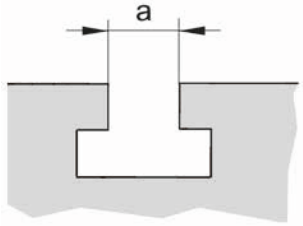

J

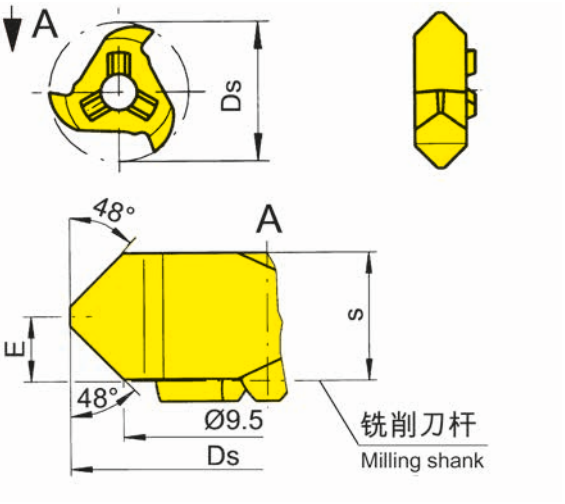

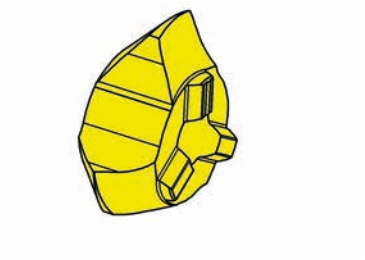

图示=右手型
Picture = right hand cutting version

硬质合金牌号
Carbide grades

▲ 库存
on stock

Δ 4周
4 weeks

产品型号 Part number	Ds	E	s	a	HIS		TI25
311.4216.00	15.8	3	5.95	10	311090R		▲
						P	●
						M	●
						K	●
						N	●
						S	●
						H	-

J

铣刀杆
Milling shank
M313

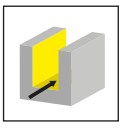

页/Page
418

刀片
Insert
313

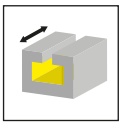

页/Page
419

J

M313

T型槽铣刀

带可转位刀片

切削刃自 Ø 20 mm

T-Slot Cutter with exchangeable inserts

from cutting edge Ø 20 mm

J

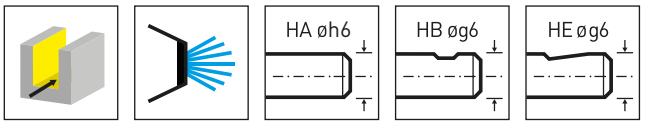

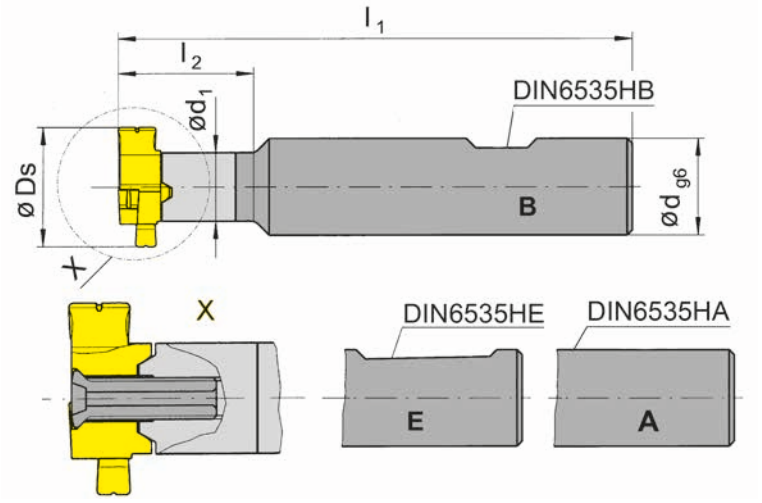

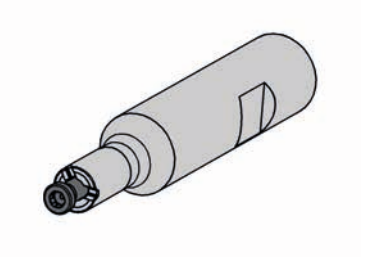

图示=右手型
Picture = right hand cutting version

产品型号 Part number	d	l_1	l_2	d_1	形式 Form	HWS
M313.0016.00A	16	93	30	11.5	A	313113R • 313113L
M313.0016.00B	16	93	30	11.5	B	313113R • 313113L
M313.0016.00E	16	93	30	11.5	E	313113R • 313113L

Ds见刀片
Ds see inserts

J

配件
Spare Parts

铣刀杆 Milling shank	**锁紧螺钉** Clamping Screw	**TORX PLUS®扳手** TORX PLUS® Wrench
M313...	**5.13T20KP**	**T20PQ**

z3

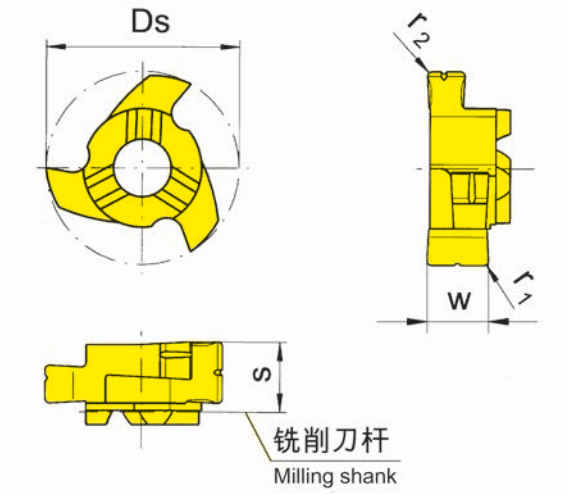

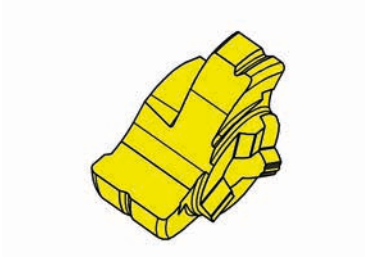

图示=右手型
Picture = right hand cutting version

硬质合金牌号
Carbide grades

▲ 库存
on stock

Δ 4周
4 weeks

产品型号 Part number	Ds	s	w	r_1	r_2	a	HIS		AS45	TI25
313.1219.00	20	8.7	8.2	0.5	0.8	12	313113R		▲	▲
								P	●	●
								M	●	●
								K	●	●
								N	o	●
								S	●	●
								H	-	-

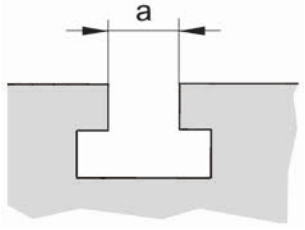

J

铣刀杆
Milling shank
M328

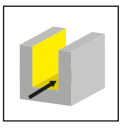

页/Page
422

刀片
Insert
328

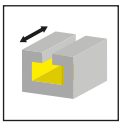

页/Page
423

技术信息
Technical Instructions

页/Page
424

J

M328

T型槽铣刀

带可转位刀片

切削刃自 Ø 24 mm

T-Slot Cutter with exchangeable inserts

from cutting edge Ø 24 mm

J

M328

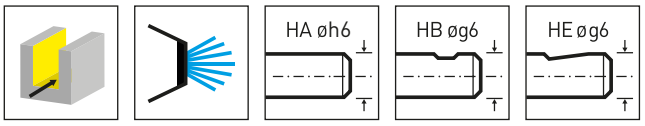

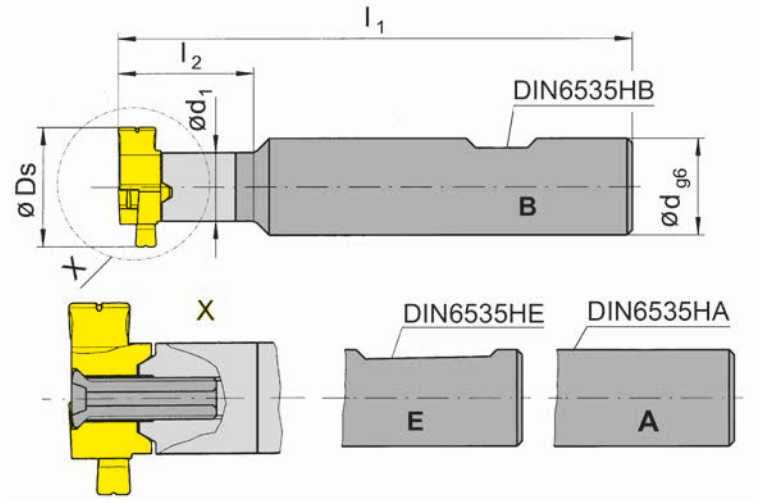

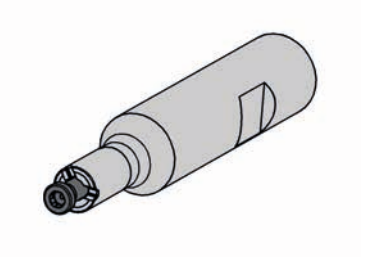

图示=右手型
Picture = right hand cutting version

产品型号 Part number	d	l_1	l_2	d_1	形式 Form	HWS
M328.0020.00A	20	104	35	13.5	A	328143R
M328.0020.00B	20	104	35	13.5	B	328143R
M328.0020.00E	20	104	35	13.5	E	328143R

Ds见刀片
Ds see inserts

J

配件
Spare Parts

铣刀杆 Milling shank	锁紧螺钉 Clamping Screw	TORX PLUS®扳手 TORX PLUS® Wrench
M328...	**5.13T20KP**	**T20PQ**

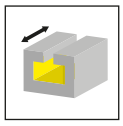

z3

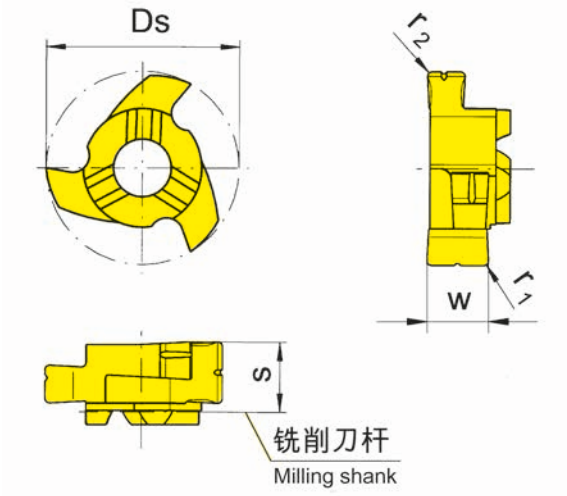

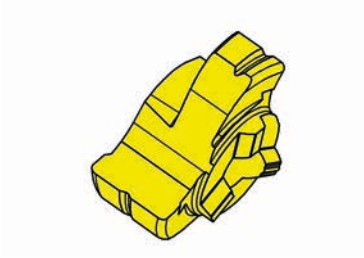

图示=右手型
Picture = right hand cutting version

硬质合金牌号
Carbide grades

▲ 库存
on stock

Δ 4周
4 weeks

产品型号 Part number	Ds	s	w	r_1	r_2	a	HIS		AS45	TI25
328.1423.00	24	9.8	9.2	0.5	1	14	328143R		▲	▲
								P	●	●
								M	●	●
								K	●	●
								N	o	●
								S	●	●
								H	-	-

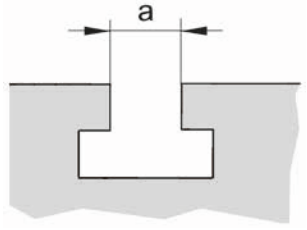

J

应用技术
Application Technology

$a_2 \approx 0.2 \times s$

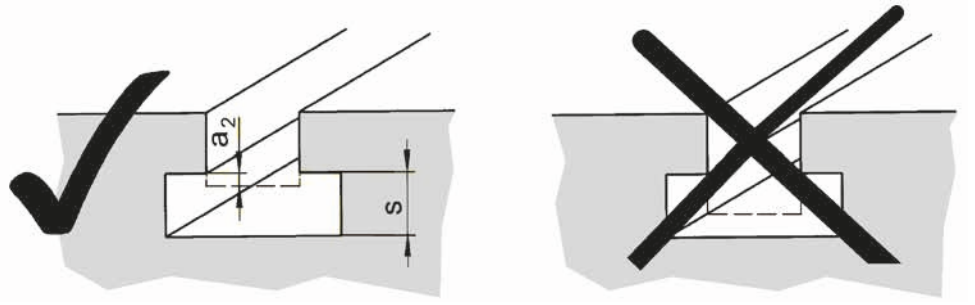

推荐
recommended

不推荐
not recommended

切削参数
Cutting data

T型槽铣削
Milling of T-slots

工件材质 Workpiece material	刀具材质 Cutting material	v_c (m/min)	f_z (mm), Z=1 Ds 17 mm	f_z (mm), Z=1 Ds 20-24 mm
碳钢 Carbon steel	TI25 / AS45	200 - 300	0.03 - 0.06	0.05 - 0.08
合金钢 Alloyed steel	TI25 / AS45	140 - 220	0.02 - 0.04	0.03 - 0.05
灰铸铁 Grey cast iron	TI25 / AS45	100 - 160	0.03 - 0.06	0.05 - 0.10

T型槽倒角
Chamfering of T-slots

工件材质 Workpiece material	刀具材质 Cutting material	v_c (m/min)	f_z (mm), Z=3
碳钢 Carbon steel	TI25 / AS45	300 - 400	0.10 - 0.13
合金钢 Alloyed steel	TI25 / AS45	180 - 300	0.13 - 0.21
灰铸铁 Grey cast iron	TI25 / AS45	140 - 240	0.16 - 0.27

J

该切削参数只适用于防振的标准硬质合金刀杆

The cutting data is only valid for standard carbide toolholders (shanks) listed in this chapter.

T型槽铣削
Milling of T-Slots

杆式铣刀
End Mill
M406/M409

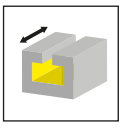

页/Page
428-429

可转位刀片
Indexable insert
406/409

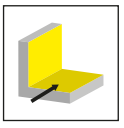

页/Page
430-431

技术信息
Technical Instructions

页/Page
432

J

M406/M409

T型槽铣刀

带可转位刀片

切削刃 Ø 25-50 mm

T-slots Cutter with exchangeable inserts

cutting edge Ø 25-50 mm

J

M406

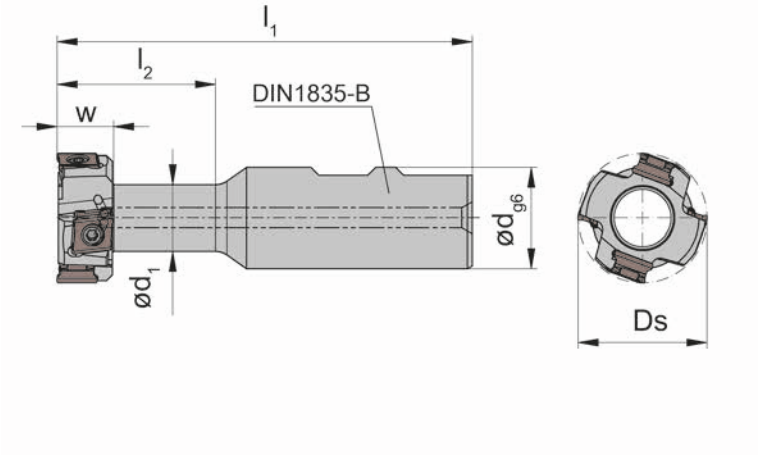

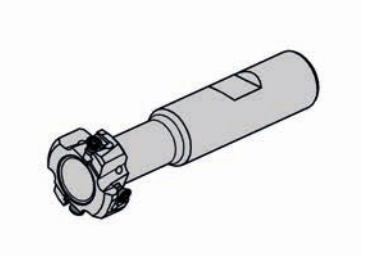

图示=右手型
Picture = right hand cutting version

产品型号 Part number	Z	Z_{eff}	Ds	d	l_1	l_2	d_1	w	a	n_{max}	右手型刀片 right hand insert	左手型刀片 left hand insert	HWS
M406.025.11.D16.1.02.B	4	2	25	16	83	31	12.4	11	12.9	19000	2x R406.063.U...	2x L406.063.U...	40600R • 40600L

Ø25mm以上为2个夹持面
from Ø 25 mm 2 clamping flats

J

配件
Spare Parts

杆式铣刀 End Mill	**锁紧螺钉** Clamping Screw	**TORX PLUS®扳手** TORX PLUS® Wrench
M406.025.11.D16.1.02.B	**030.2608.T8P**	**T8PL**

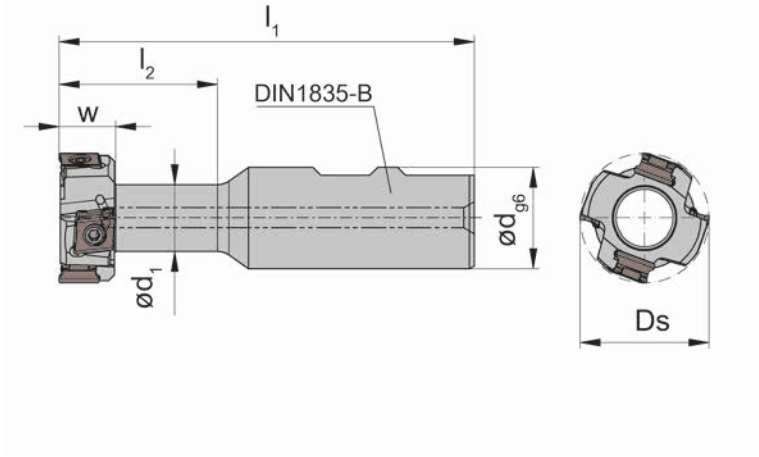

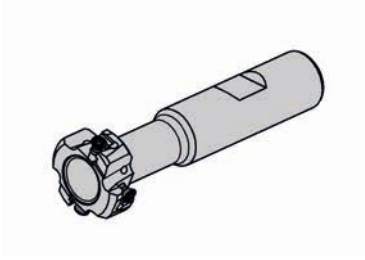

图示=右手型
Picture = right hand cutting version

产品型号 Part number	Z	Z_{eff}	Ds	d	l_1	l_2	d_1	w	a	n_{max}	右手型刀片 right hand insert	左手型刀片 left hand insert	HWS
M409.032.14.D25.1.02.B	4	2	32	25	103	39	16.4	14	16.9	15600	2x R409.093.U...	2x L409.093.U...	40900R • 40900L
M409.040.18.D25.1.02.B	4	2	40	25	109	48	20.4	18	20.9	13900	2x R409.093.U...	2x L409.093.U...	40900R • 40900L
M409.050.22.D32.1.02.B	6	2	50	32	125	59	26.4	22	26.9	12500	4x R409.093.U...	2x L409.093.U...	40900R • 40900L

Ø25mm以上为2个夹持面
from Ø 25 mm 2 clamping flats

J

配件
Spare Parts

杆式铣刀 End Mill	锁紧螺钉 Clamping Screw	TORX PLUS®扳手 TORX PLUS® Wrench
M409...	**030.3511.T10P**	**T10PL**

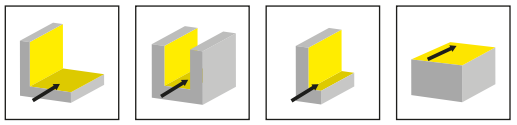

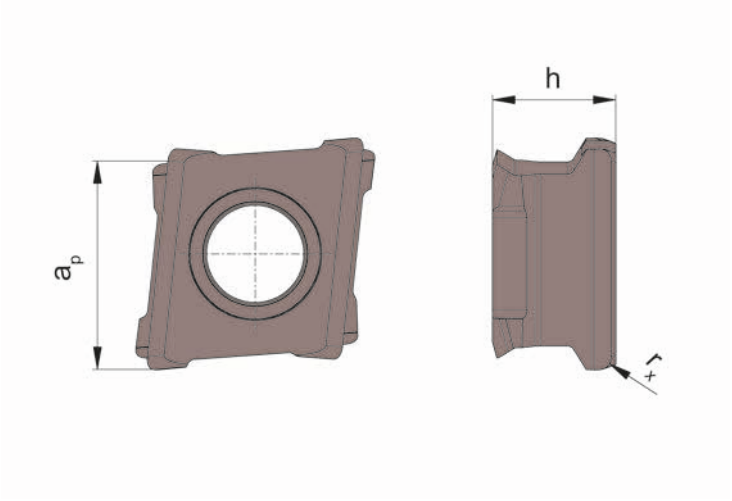

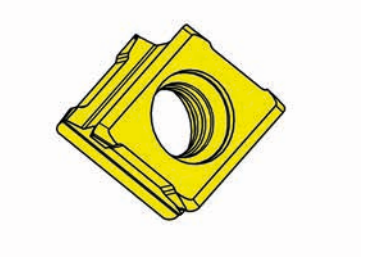

硬质合金牌号
Carbide grades

▲ 库存
on stock

Δ 4周
4 weeks

产品型号 Part number	a_p	h	r_x	HIS		AS46	AS4B
R406.063.U.02	6.3	3.85	0.2	40600R		Δ	▲
R406.063.U.04	6.3	3.85	0.4	40600R		▲	▲
R406.063.U.08	6.3	3.85	0.8	40600R		▲	▲
L406.063.U.02	6.3	3.85	0.2	40600L		Δ	▲
L406.063.U.04	6.3	3.85	0.4	40600L		▲	▲
L406.063.U.08	6.3	3.85	0.8	40600L		▲	▲
					P	o	●
					M	o	●
					K	●	●
					N	o	o
					S	o	●
					H	-	-

4个切削刃刀片
with 4 usable cutting edges

J

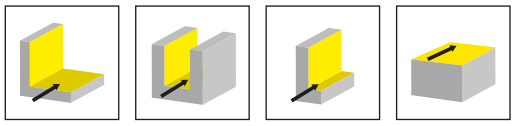

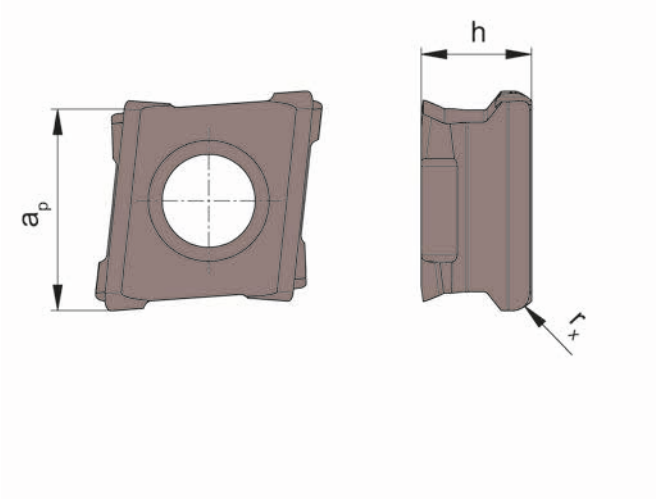

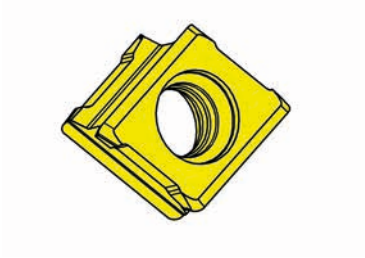

硬质合金牌号
Carbide grades

▲ 库存
on stock

Δ 4周
4 weeks

产品型号 Part number	a_p	h	r_x	HIS		AS46	AS4B
R409.093.U.04	9.3	5.2	0.4	40900R		▲	▲
R409.093.U.08	9.3	5.2	0.8	40900R		▲	▲
R409.093.U.12	9.3	5.2	1.2	40900R		▲	▲
L409.093.U.04	9.3	5.2	0.4	40900L		▲	▲
L409.093.U.08	9.3	5.2	0.8	40900L		▲	▲
L409.093.U.12	9.3	5.2	1.2	40900L			▲
					P	o	●
					M	o	●
					K	●	●
					N	o	o
					S	o	●
					H	-	-

4个切削刃刀片
with 4 usable cutting edges

J

应用技术
Application Technology

$a_2 \approx 0{,}2 \times s$

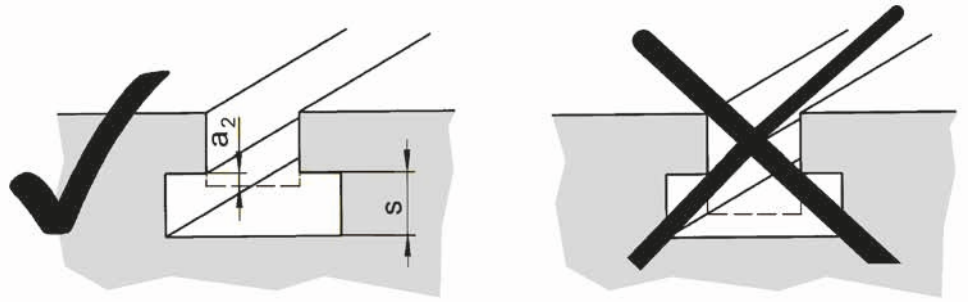

推荐
recommended

不推荐
not recommended

切削参数
Cutting data

T型槽铣削 Ø25 / Ø32 mm
Milling of T-Slots

工件材质 Workpiece material	刀具材质 Cutting material	v_c (m/min)	f_z (mm)
热处理钢 heat-treatable steel	AS4B	120 - 160	0.07 - 0.14
灰铸铁 Grey cast iron	AS4B	100 - 160	0.07 - 0.14

T型槽铣削 Ø40 / Ø50 mm
Milling of T-Slots

工件材质 Workpiece material	刀具材质 Cutting material	v_c (m/min)	f_z (mm)
热处理钢 heat-treatable steel	AS4B	60 - 90	0.06 - 0.08
灰铸铁 Grey cast iron	AS4B	90 - 140	0.06 - 0.08

系列/System	页/Page
M275	**434**
381	**440**

K

铣刀
Cutter
M275

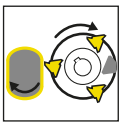

页/Page
436-437

可转位刀片
Indexable insert
S275

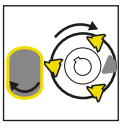

页/Page
438

M275

铣刀

切削刃自 Ø 40 mm

Cutter

from cutting edge Ø 40 mm

K

M275

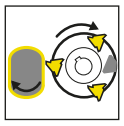

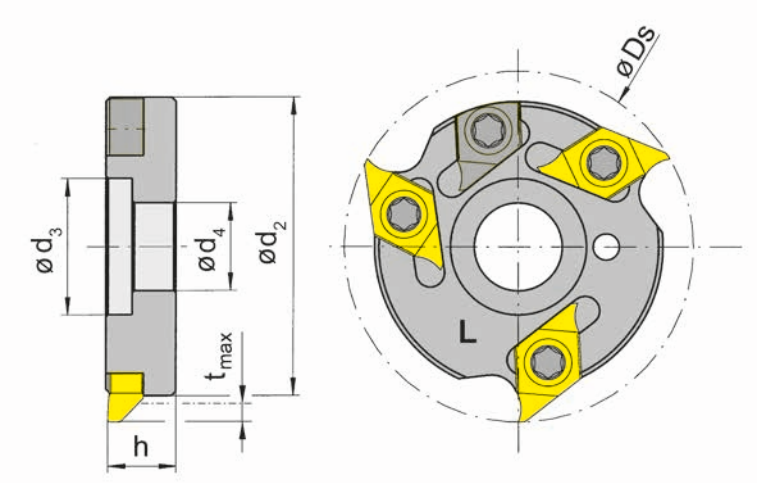

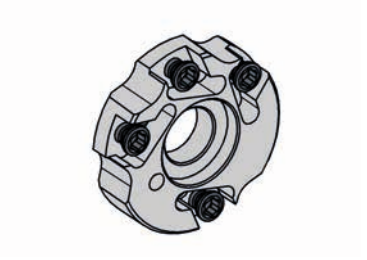

图示=左手型切削
Picture = left hand cutting version

产品型号 Part number	Ds	d_2	h	t_{max}	d_4	d_3	机床型号 Machine type	HWS
RM275.D040.10.04	40	33	7.9	3	10	15.5	EvoDECO 10	275041R
LM275.D040.10.04	40	33	7.9	3	10	15.5	EvoDECO 10	275041L

适用机床：**Tornos**
for machine: Tornos

K

配件
Spare Parts

铣刀 Cutter	锁紧螺钉 Clamping Screw	TORX PLUS®扳手 TORX PLUS® Wrench	左手刀平衡元件 Left hand balancing element	右手刀平衡元件 Right hand balancing element
LM275.D040.10.04	**030.357P.0315**	**T10PL**	**LS275.AT41.HM**	
RM275.D040.10.04	**030.357P.0315**	**T10PL**		**RS275.AT41.HM**

M275

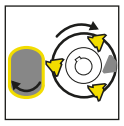

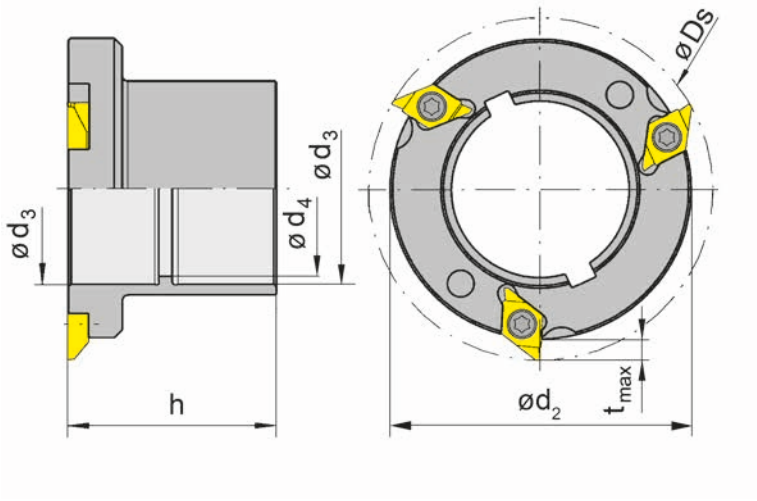

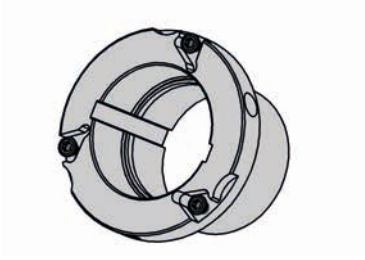

图示=右手型
Picture = right hand cutting version

产品型号 Part number	Ds	d_2	h	t_{max}	d_4	d_3	机床型号 Machine type	HWS
RM275.T064.3325.03	64	56	36	3	10	15.5	EvoDECO 10	275041R

适用机床:**Tornos**
for machine: Tornos

K

配件
Spare Parts

铣刀 Cutter	**锁紧螺钉** Clamping Screw	**TORX PLUS®扳手** TORX PLUS® Wrench
RM275.T064.3325.03	**3.5.10T10P**	**T10PL**

S275

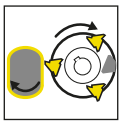

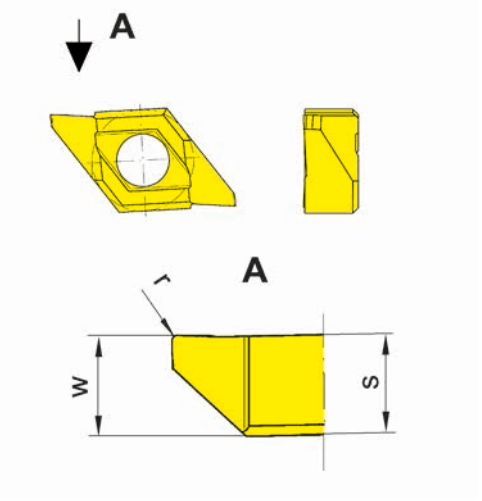

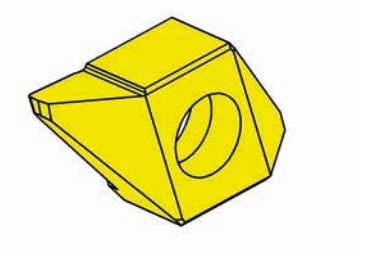

R=右手型-如图
R = right hand version shown

L=左手型
L = left hand version

▲ 库存
on stock

Δ 4周
4 weeks

硬质合金牌号
Carbide grades

产品型号 Part number	w	r	s	HIS		MG12	AS45	TI25
RS275.MK13.M0	1.3	0.2	3.9	275041R		Δ	▲	▲
LS275.MK13.M0	1.3	0.2	3.9	275041L		Δ	▲	▲
					P	o	●	●
					M	-	●	●
					K	-	●	●
					N	-	o	●
					S	-	●	●
					H	-	-	-

K

铣刀
Cutter
381

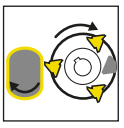

页/Page
442-454

可转位刀片
Indexable insert
N314/314

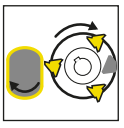

页/Page
455-456

技术信息
Technical Instructions

页/Page
457-462

概述
Overview

页/Page
463-464

K

381

铣刀

切削刃自 Ø 60 mm

Cutter

from cutting edge Ø 60 mm

K

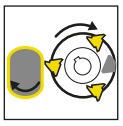

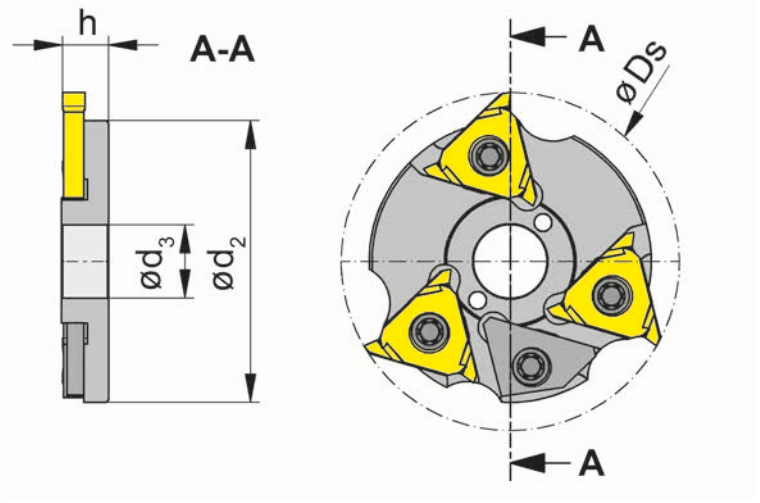

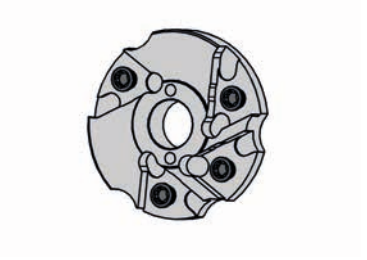

图示=左手型切削
Picture = left hand cutting version

产品型号 Part number	Ds	d_2	h	t_{max}	d_3	机床型号 Machine type	HWS
L381.A060.13.04	60	50	8.2	4.5	13	Star SR-20J	314027N

用于机床：**Star**
for machine: Star

K

配件
Spare Parts

铣刀 Cutter	**锁紧螺钉** Clamping Screw	**TORX PLUS®扳手** TORX PLUS® Wrench	左手刀平衡元件 Left hand balancing element
L381.A060.13.04	**5F.08T20P**	**T20PQ**	**L314.AT30.HM**

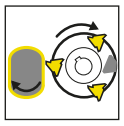

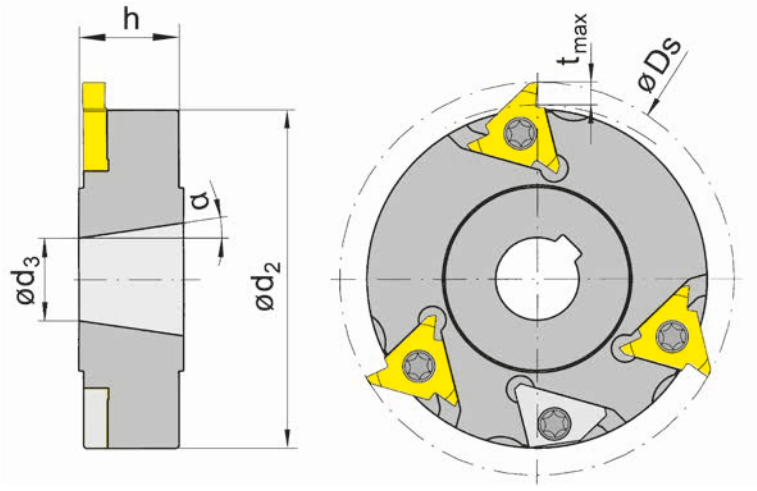

图示=左手型切削
Picture = left hand cutting version

产品型号 Part number	Ds	d_2	h	α	t_{max}	d_3	机床型号 Machine type	HWS
L381.G070.15.04	70	58	15	8.16°	5	11.5	GLD25/GD32	314041L
L381.G086.25.04	86	74	23	8.16°	5	18	GM20-6,-35-8/GMC35	314041L
L381.G098.26.04	98	86	23	8.32°	5	20	GM35-6,-35-8,-42-6/GMC35	314041L

适用机床：**Gildemeister**
for machine: Gildemeister

K

配件
Spare Parts

铣刀 Cutter	**锁紧螺钉** Clamping Screw	**TORX PLUS®扳手** TORX PLUS® Wrench	**平衡块** Balancing element
L381.G070.15.04	**5.10T20P**	**T20PQ**	**N314.AT40.HM**
L381.G...	**5.12T20P**	**T20PQ**	**N314.AT40.HM**

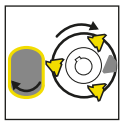

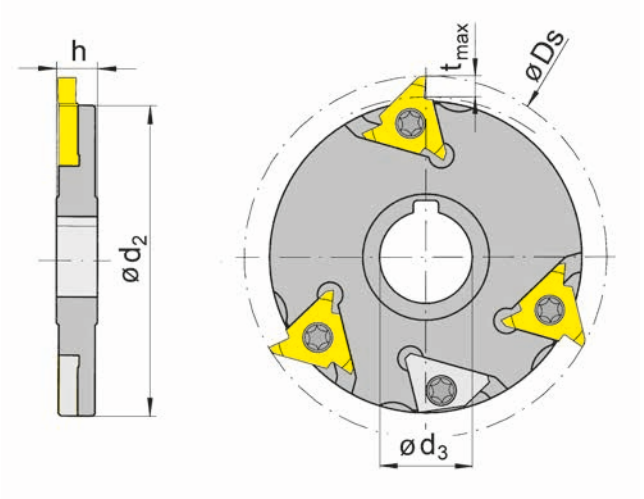

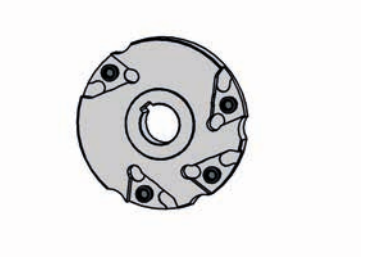

图示=左手型切削
Picture = left hand cutting version

产品型号 Part number	Ds	d_2	h	t_{max}	d_3	机床型号 Machine type	HWS
L381.G080.16.04	80	68	9	5	16	SPRINT 20/32	314027N

适用机床：**Gildemeister**
for machine: Gildemeister

K

配件
Spare Parts

铣刀 Cutter	**锁紧螺钉** Clamping Screw	**TORX PLUS®扳手** TORX PLUS® Wrench	左手刀平衡元件 Left hand balancing element
L381.G080.16.04	**5F.08T20P**	**T20PQ**	**L314.AT30.HM**

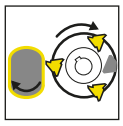

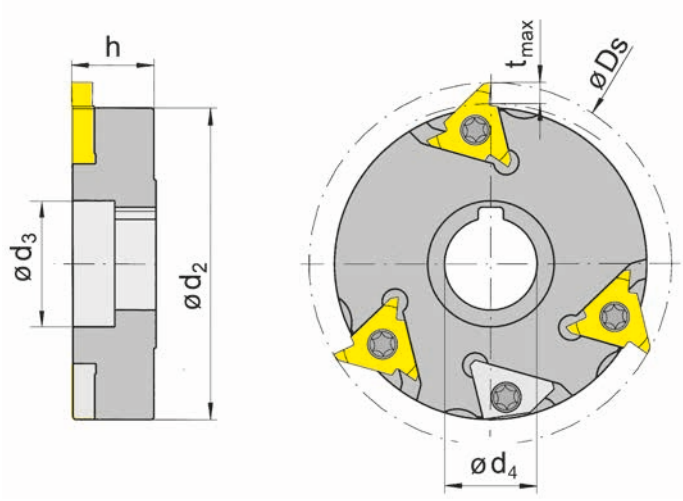

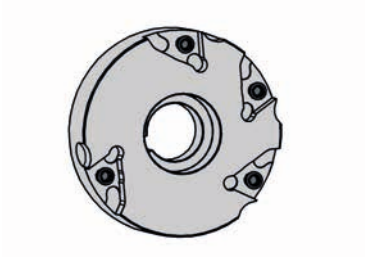

图示=左手型切削
Picture = left hand cutting version

产品型号 Part number	Ds	d_2	h	t_{max}	d_4	d_3	机床型号 Machine type	HWS
L381.G090.22.04	90	78	20	5	22	30	SPRINT 32L/-42L	314041L

适用机床：**Gildemeister**
for machine: Gildemeister

K

配件
Spare Parts

铣刀 Cutter	**锁紧螺钉** Clamping Screw	**TORX PLUS®扳手** TORX PLUS® Wrench	**平衡块** Balancing element
L381.G090.22.04	**5.12T20P**	**T20PQ**	**N314.AT40.HM**

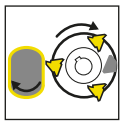

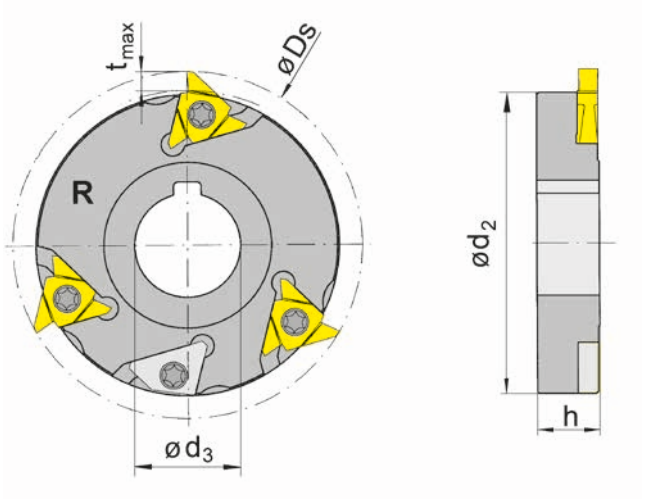

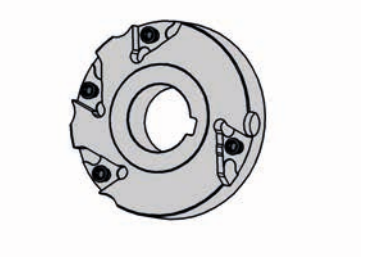

图示=右手型
Picture = right hand cutting version

产品型号 Part number	Ds	d_2	h	t_{max}	d_3	机床型号 Machine type	HWS
R381.X090.27.04	90	78	16.2	5	27	Index ABC	314041R
L381.X090.27.04	90	78	16.2	5	27	Index ABC	314041L

适用机床:**INDEX**
for machine: INDEX

K

配件
Spare Parts

铣刀 Cutter	**锁紧螺钉** Clamping Screw	**TORX PLUS®扳手** TORX PLUS® Wrench	**平衡块** Balancing element
R/L381.X090.27.04	**5.12T20P**	**T20PQ**	**020.0314.1531**

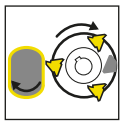

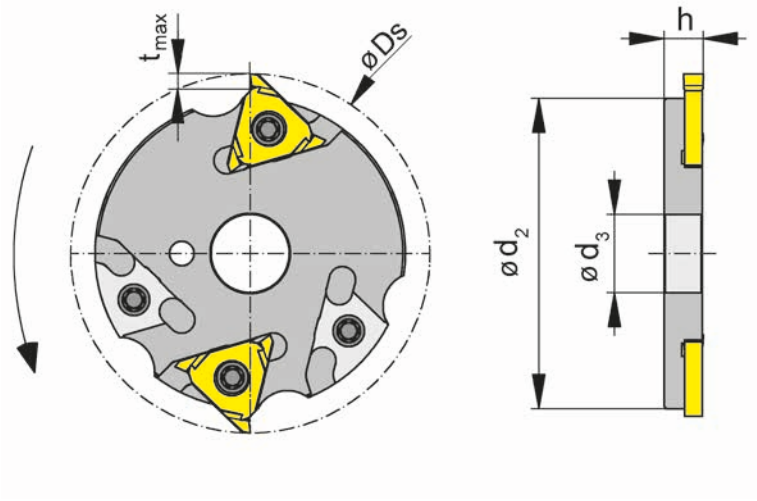

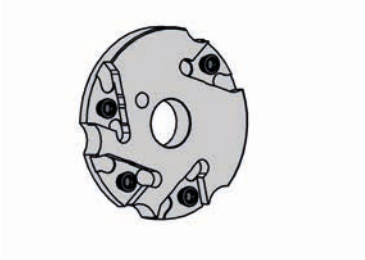

图示=右手型
Picture = right hand cutting version

产品型号 Part number	Ds	d_2	h	t_{max}	d_3	机床型号 Machine type	HWS
R381.X073.16.04	73.5	63.5	8	5	16	Index MS25	314027N

适用机床：**INDEX**
for machine: INDEX

K

配件
Spare Parts

铣刀 Cutter	**锁紧螺钉** Clamping Screw	**TORX PLUS®扳手** TORX PLUS® Wrench	右手刀平衡元件 Right hand balancing element
R381.X073.16.04	**5F.08T20P**	**T20PQ**	**R314.AT30.HM**

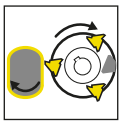

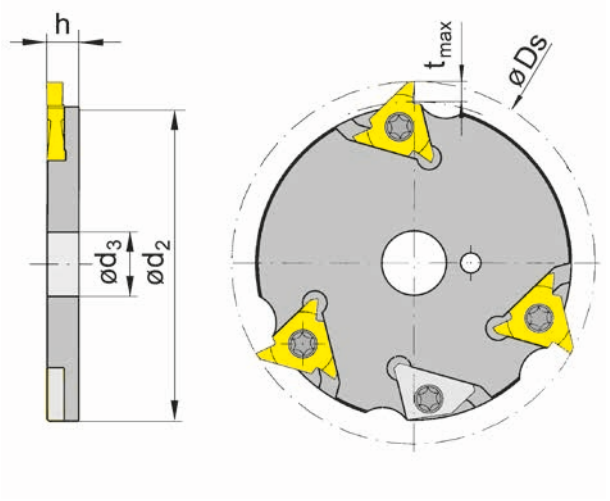

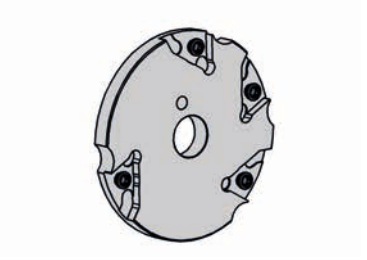

图示=左手型切削
Picture = left hand cutting version

产品型号 Part number	Ds	d_2	h	t_{max}	d_3	机床型号 Machine type	HWS
L381.N090.16.04	90	80	7.8	5	16	WT250	314027N

适用机床：**Nakamura**
for machine: Nakamura

K

配件
Spare Parts

铣刀 Cutter	**锁紧螺钉** Clamping Screw	**TORX PLUS®扳手** TORX PLUS® Wrench	左手刀平衡元件 Left hand balancing element
L381.N090.16.04	**5F.08T20P**	**T20PQ**	**L314.AT30.HM**

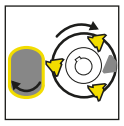

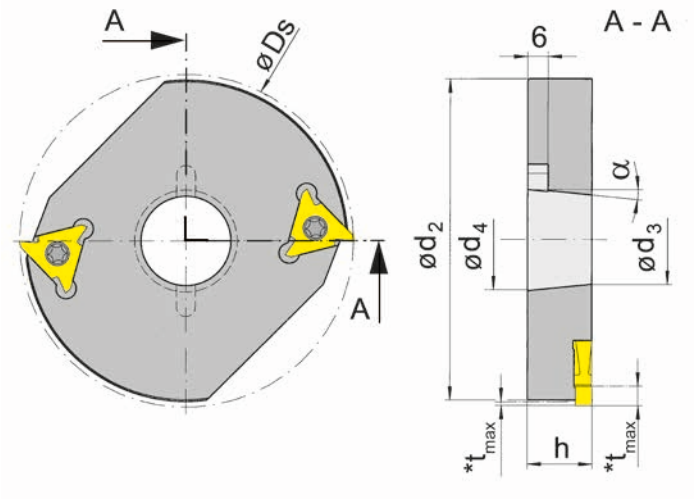

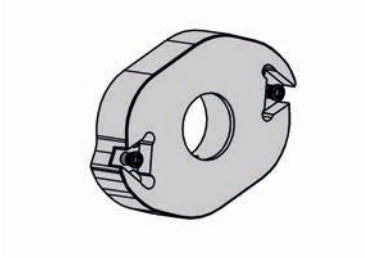

图示=左手型切削
Picture = left hand cutting version

产品型号 Part number	Ds	d_2	h	α	$*t_{max}$	d_3	机床型号 Machine type	HWS
L381.S078.30.02	78	66	19	5.42°	5	26.3	SG18, SG20, AG18	314052L
L381.S098.30.02	98	94.6	19	5.42°	5	26.3	SG20/SF26,-S,-L/SE18/AF26,32	314052L
L381.S118.30.02	118	115	19	5.42°	5	26.3	SF32,42,51,67/AF42	314052L

适用机床：**A.H. Schütte**
for machine: A.H. Schütte

增强型接口，可轴向进给
reinforced pocket, feed in axial direction

* tmax侧铣削=5.0mm/槽铣削=1.2mm
* tmax Side Milling = 5,0 mm / Groove Milling = 1,2 mm

K

配件
Spare Parts

铣刀 Cutter	**锁紧螺钉** Clamping Screw	**TORX PLUS®扳手** TORX PLUS® Wrench
L381...	**5.15T20P**	**T20PQ**

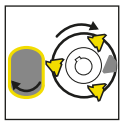

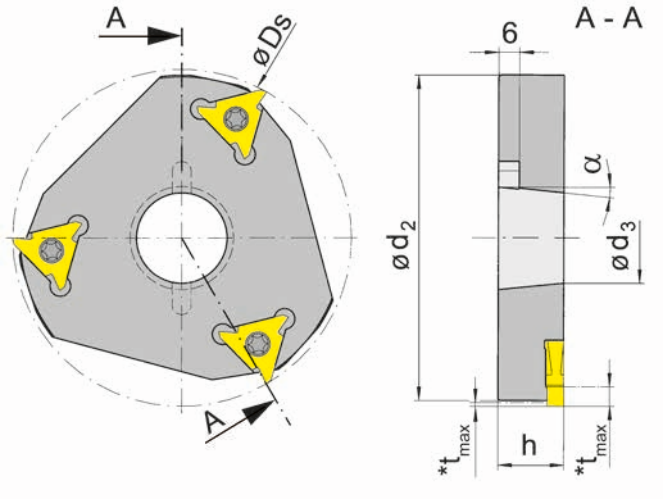

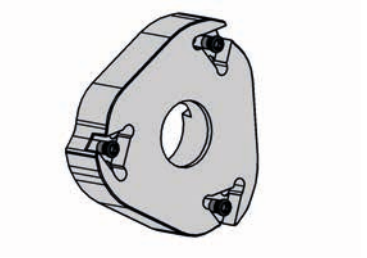

图示=左手型切削
Picture = left hand cutting version

产品型号 Part number	Ds	d_2	h	α	$*t_{max}$	d_3	机床型号 Machine type	HWS
L381.S078.30.03	78	77	19	5.42°	5	26.3	SG18, SG20, AG18	314052L
L381.S098.30.03	98	94.6	19	5.42°	5	26.3	SG20/SF26,-S,-L/SE18/AF26,32	314052L
L381.S118.30.03	118	115	19	5.42°	5	26.3	SF32,42,51,67/AF42	314052L

适用机床：**A.H. Schütte**
for machine: A.H. Schütte

增强型接口，可轴向进给
reinforced pocket, feed in axial direction

* tmax侧铣削=5.0mm/槽铣削=1.2mm
* tmax Side Milling = 5,0 mm / Groove Milling = 1,2 mm

K

配件
Spare Parts

铣刀 Cutter	**锁紧螺钉** Clamping Screw	**TORX PLUS®扳手** TORX PLUS® Wrench
L381...	**5.15T20P**	**T20PQ**

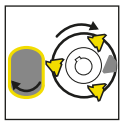

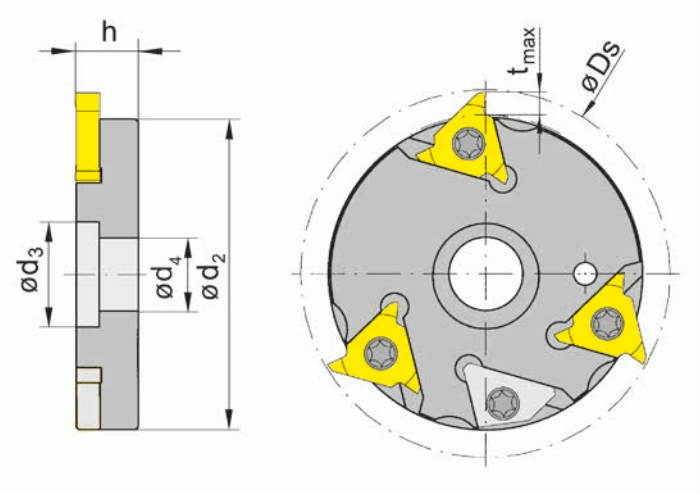

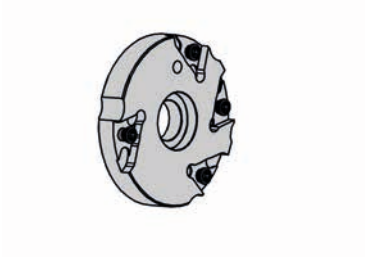

图示=左手型切削
Picture = left hand cutting version

产品型号 Part number	Ds	d_2	h	t_{max}	d_4	d_3	机床型号 Machine type	HWS
L381.D080.16.04	80	57.5	13.6	5	16	23	DECO 2000/DECO 13/20/26	314027N

适用机床:**Tornos**
for machine: Tornos

K

配件
Spare Parts

铣刀 Cutter	**锁紧螺钉** Clamping Screw	**TORX PLUS®扳手** TORX PLUS® Wrench	左手刀平衡元件 Left hand balancing element
L381.D080.16.04	**5F.08T20P**	**T20PQ**	**L314.AT30.HM**

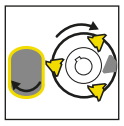

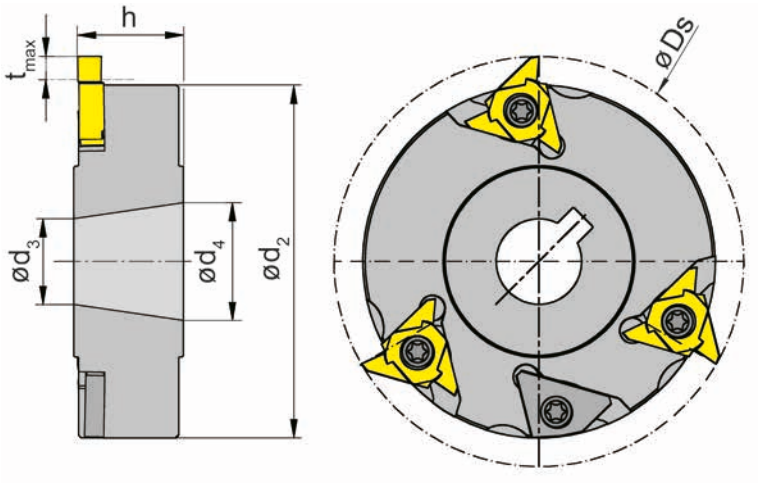

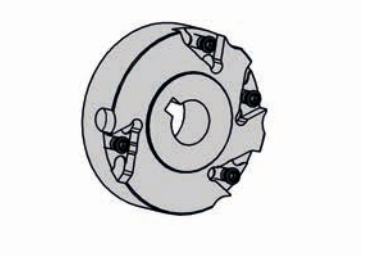

图示=左手型切削
Picture = left hand cutting version

产品型号 Part number	Ds	d_2	h	t_{max}	d_4	d_3	机床型号 Machine type	HWS
L381.D086.25.04	86	74	23	5	24.7	18	Tornos Multi-Deco	314041L

适用机床:**Tornos**
for machine: Tornos

K

配件
Spare Parts

铣刀 Cutter	**锁紧螺钉** Clamping Screw	**TORX PLUS®扳手** TORX PLUS® Wrench	**平衡块** Balancing element
L381.D086.25.04	**5.12T20P**	**T20PQ**	**N314.AT40.HM**

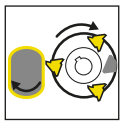

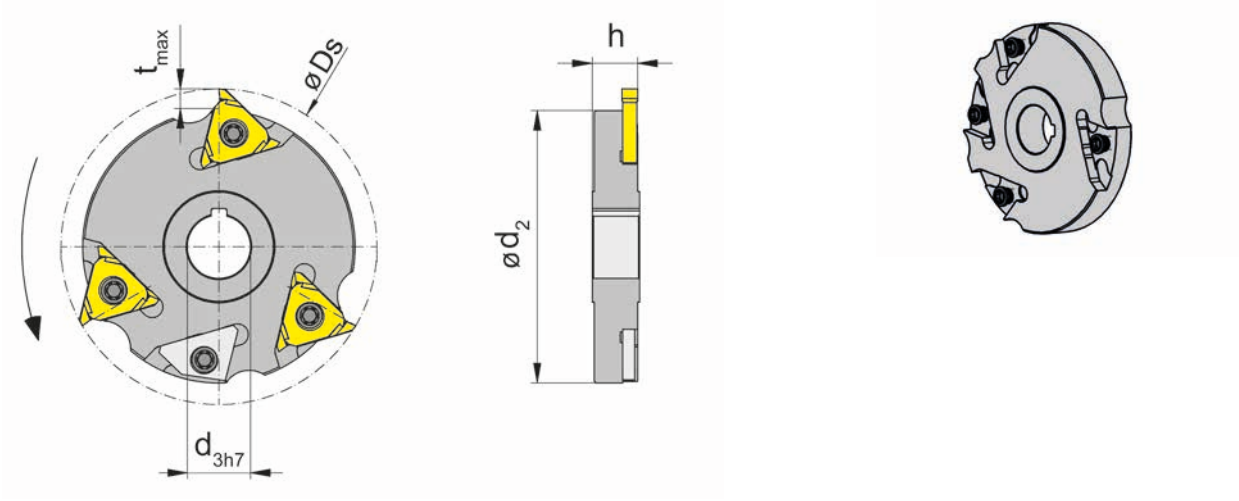

图示=右手型
Picture = right hand cutting version

产品型号 Part number	Ds	d_2	h	t_{max}	d_3	机床型号 Machine type	HWS
R381.T080.16.04	80	69	12	5	16	TRAUB TNL18	314027N

适用机床:**Traub**
for machine: Traub

K

配件
Spare Parts

铣刀 Cutter	**锁紧螺钉** Clamping Screw	**TORX PLUS®扳手** TORX PLUS® Wrench	右手刀平衡元件 Right hand balancing element
R381.T080.16.04	**5F.08T20P**	**T20PQ**	**R314.AT30.HM**

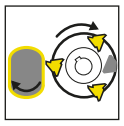

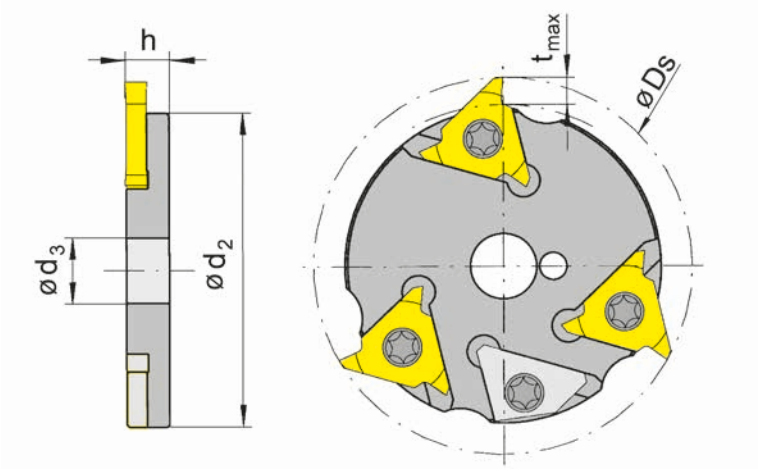

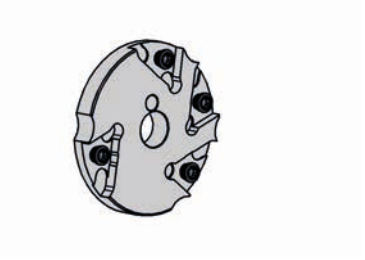

图示=左手型切削
Picture = left hand cutting version

产品型号 Part number	Ds	d_2	h	t_{max}	d_3	机床型号 Machine type	HWS
L381.T069.12.04	69	57.5	8	5	12	TNL12-7/TNL26/TNK36	314027N

适用机床:**Traub**
for machine: Traub

K

配件
Spare Parts

铣刀 Cutter	**锁紧螺钉** Clamping Screw	**TORX PLUS®扳手** TORX PLUS® Wrench	左手刀平衡元件 Left hand balancing element
L381.T069.12.04	**5F.08T20P**	**T20PQ**	**L314.AT30.HM**

N314 / 314

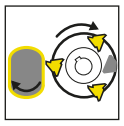

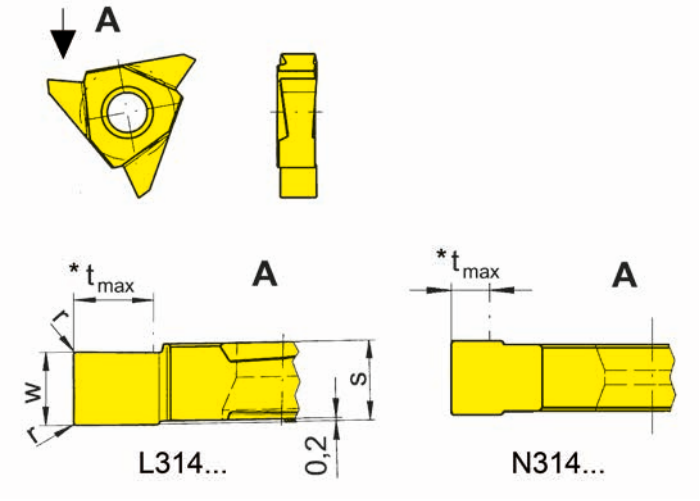

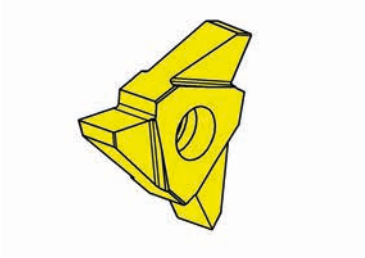

硬质合金牌号
Carbide grades

▲ 库存
on stock

Δ 4周
4 weeks

产品型号 Part number	w	r	s	HIS		MG12	AS45	TI25	TN35
R314.MK50.20	5	0.15	5.2	314041R			▲	▲	
L314.MK50.20	5	0.15	5.2	314041L			▲	▲	
L314.MK70.M0	7	0.15	7.4	314052L			▲	▲	▲
N314.MK40.20	4	-	3.6	314027N		▲	▲	▲	Δ
					P	o	●	●	●
					M	-	●	●	●
					K	-	●	●	●
					N	-	o	●	●
					S	-	●	●	●
					H	-	-	-	-

t_{max}	**槽铣削** Groove Milling	横向铣削 Side Milling
N314.MK40.20	siehe Fräser/see cutter	2.5
R/L314.MK50.20	siehe Fräser/see cutter	5
L314.MK70.M0	siehe Fräser/see cutter	5

K

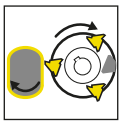

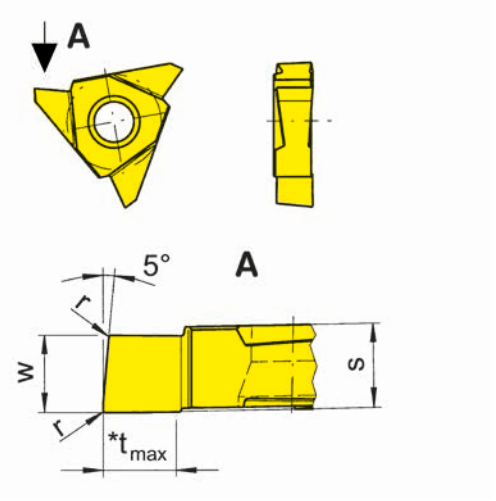

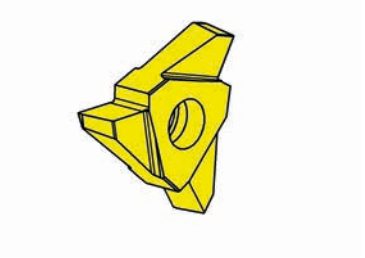

L=左手型-如图
L = left hand version shown

R=右手型
R = right hand version

▲ 库存
on stock

Δ 4周
4 weeks

硬质合金牌号
Carbide grades

产品型号 Part number	w	r	s	t_{max}	HIS		AS45	TH35	TI25
R314.MK50.5.20	5	0.15	5.4	5	314041R		▲		▲
R314.MK50.20.L	5.4	0.6	5.4	5	314041R		▲	Δ	▲
L314.MK50.5.20	5	0.15	5.4	5	314041L		▲		▲
L314.MK50.20.L	5.4	0.6	5.4	5	314041L		▲		▲
						P	●	●	●
						M	●	●	●
						K	●	●	●
						N	o	●	●
						S	●	●	●
						H	-	-	-

K

多边形铣削的工作原理

多边形铣削介绍了使用多边形铣削刀具在CNC车床、Swiss机床或多主轴机床上加工旋转工件。
工件（主轴）和铣刀（动力座）必须同步转动。

该操作仅仅适用于常规铣削！

面数决定于工件和铣刀的转速比以及铣刀上的刀片数量。
当转速为2:1时，产生的平面为微凸型。这形状误差适合大多数应用，例如对边型。
当转速为1:1时，平面凸起较大，将不适合对边型。
当转速为3:1时，平面有较大的凹陷，也不适合对边型。

根据这一点可知，工件上的平面数是刀片数的两倍。

必须通过参数计算平面形状：

1. 多边形铣刀的铣削直径
2. 对边型尺寸
3. 工件加工前直径
4. 面数
5. 工件和铣刀的转速比

可通过切槽或车削加工出这些平面，通过仿形去倒角（去毛刺）。

槽铣削

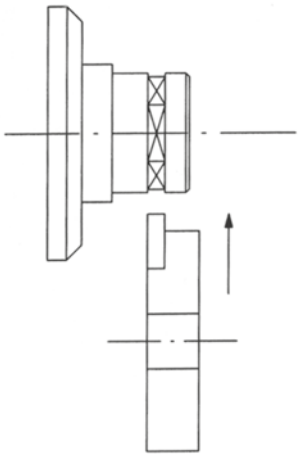

横向铣削

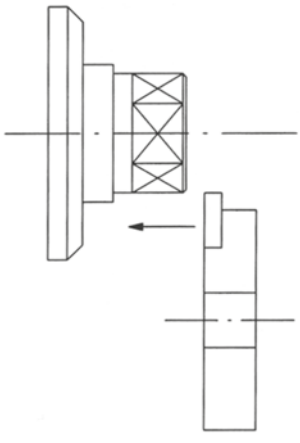

仿形和横向铣削

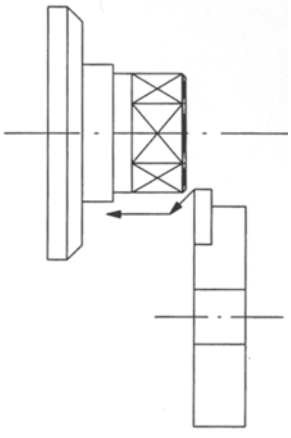

K

两面体，使用1个刀片，刀盘转速 2:1 主轴转速.

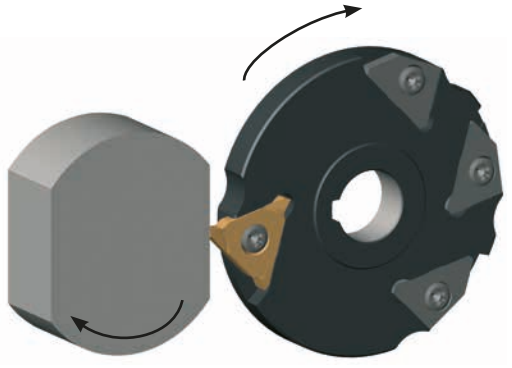

四面体，使用2个刀片. 刀盘转速 2:1 主轴转速.

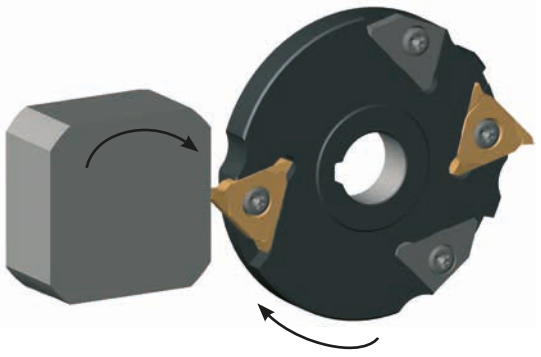

六面体，使用3个刀片，刀盘转速 2:1 主轴转速.

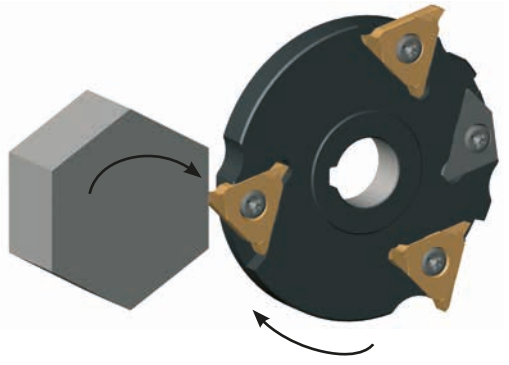

The concept of Polygon Milling

Polygon milling describes the manufacturing of flats while rotating components with polygon milling cutters on CNC lathes, Swiss Automatics lathes or Multi Spindle machines. The component (main spindle) and the milling cutter (live tool) have to run with synchronized rotations.

The operation only works in conventional milling!

The number of flats depends on the rotation ratio between component and milling cutter as well as on the number of inserts of the milling cutter.

At a revolution ratio of 2:1, the shape of the produced flats are little convex. The form error is suitable for most applications such as across-flats.
At a revolution ratio of 1:1, the shape of the produced flats are heavily convex. This shape is not suitable for across-flats.
At a revolution ratio of 3:1, the shape of the produced flats are heavily concave. This shape is as well not suitable for across-flats.

According to this, the number of flats at the component is twice the number of cutting inserts on the milling cutter.

To calculate the shape of the flats following parameter are necessary:

1. Cutting diameter of the polygon miling cutter
2. Across-flats dimension
3. Premachined diameter of the component
4. Number of flats
5. Revolution ratio of component and milling cutter

The flats can be produced by grooving or by turning. Chamfers can be produced by profiling (deburring).

Groove milling

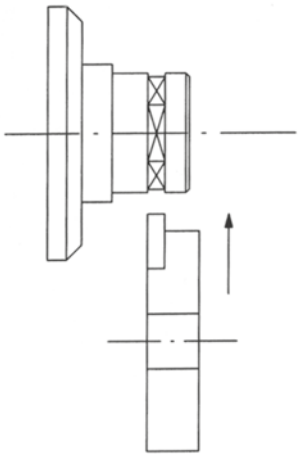

Side milling

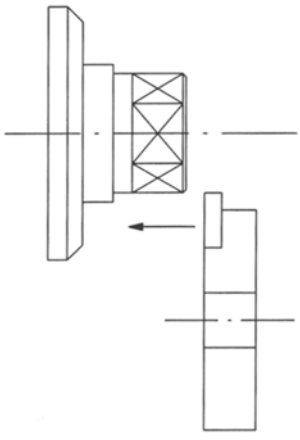

Copymilling and
Side milling

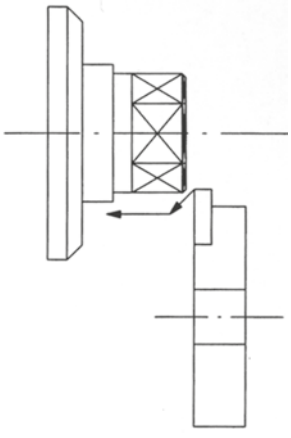

K

Two flats machined with 1 cutting edge. Revolution ratio 2:1 to the main spindle.

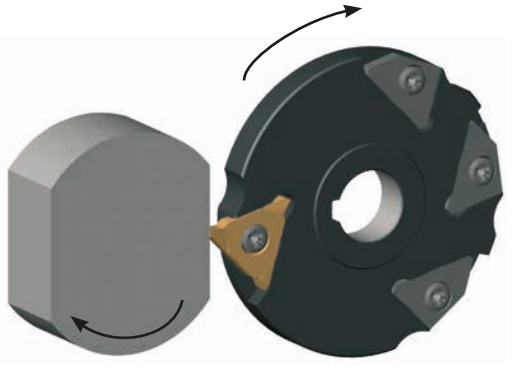

Four flats machined with 2 cutting edges. Revolution ratio 2:1 to the main spindle.

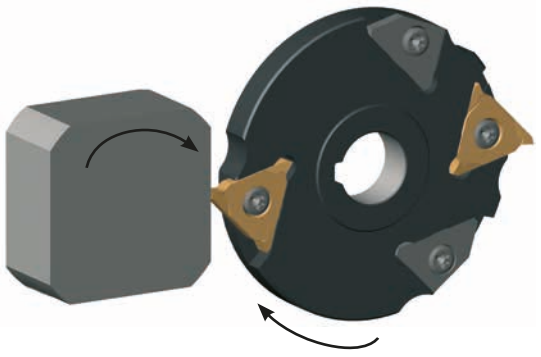

Six flats machined with 3 cutting edges. Revolution ratio 2:1 to the main spindle.

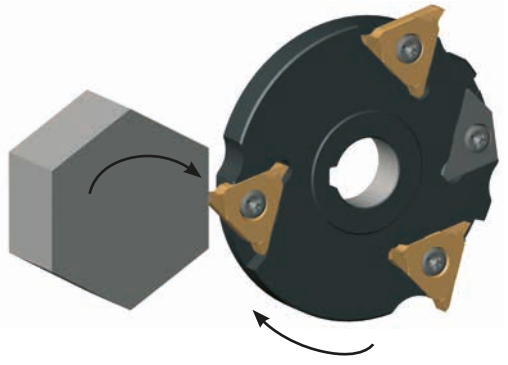

规格	铣刀上刀片数量	比率=刀具:主轴	生成的平面
	1	1 : 1	不适合,大凸面
	2 1	1 : 1 2 : 1	不适合,小凸面 非常适合,小凸面
	3 2 1	1 : 1 1,5 : 1 3 : 1	不适合,凸面 适合,凹面 非常适合,小凹面
	2 1	2 : 1 4 : 1	非常适合,小凸面 不适合,凹面
	3 2 1	1,66 : 1 2,5 : 1 5 : 1	适合,凸面 非常适合,小凹面 不适合,凹面
	3 2	2 : 1 3 : 1	非常适合,小凸曲面 不适合,凹曲面
	4 2	2 : 1 4 : 1	非常适合,小凸曲面 不适合,凹曲面

切削参数

材料	牌号	v_c m/min	进给量 f_z mm	
			横向铣削	槽铣削
Al	TI25,MG12	500 - 1000	0.10 - 0.20	0.05 - 0.10
Ms58	TI25,MG12	500 - 1000	0.10 - 0.20	0.05 - 0.10
9SMnPb28	TH35,TI25,AS45	200 - 500	0.08 - 0.15	0.04 - 0.08
16MnCr5/C45	TH35,TI25,AS45	150 - 250	0.05 - 0.10	0.03 - 0.05

进给率值仅仅适合横向铣削!
切槽工艺中进给率需降低30 - 50 %, 同时受刀片宽度影响。

例如:
横向铣削
材料: 钢

铣刀 Ø 90 mm
SW 24 mm (Ø 27.7 mm)
$v_{c\,eff}$ = 448.00 m/min
f_z = 0.08 mm
3 刃, l = 2:1
边长: 12 mm
节拍: ~ 2.19 s

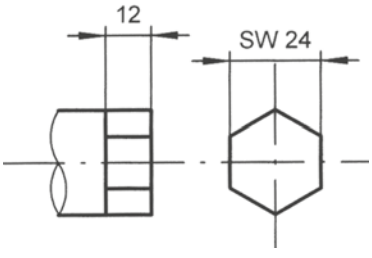

工具:
n_{WZ} = 1372.00 mm^{-1}
$v_{c\,WZ}$ = 388.25 m/min

工件:
n_{WS} = 686.00 mm^{-1}
$v_{c\,WS}$ = 59.75 m/min

K

Form	No. of inserts on the cutter	Ratio = Tool:Spindel	Flats
	1	1 : 1	not suitable, heavily convex
	2 1	1 : 1 2 : 1	not suitable, convex very suitable, little convex
	3 2 1	1 : 1 1,5 : 1 3 : 1	not suitable, convex suitable, convex very suitable, little concave
	2 1	2 : 1 4 : 1	very suitable, little convex not suitable, concave
	3 2 1	1,66 : 1 2,5 : 1 5 : 1	suitable, convex very suitable, little concave not suitable, concave
	3 2	2 : 1 3 : 1	very suitable, little convex not suitable, concave
	4 2	2 : 1 4 : 1	very suitable, little convex not suitable, concave

Cutting data

Material	Grades	v_c m/min	Feed rate $f_z$mm	
			Side milling	Groove milling
Al	TI25,MG12	500 - 1000	0.10 - 0.20	0.05 - 0.10
Ms58	TI25,MG12	500 - 1000	0.10 - 0.20	0.05 - 0.10
9SMnPb28	TH35,TI25,AS45	200 - 500	0.08 - 0.15	0.04 - 0.08
16MnCr5/C45	TH35,TI25,AS45	150 - 250	0.05 - 0.10	0.03 - 0.05

Feed rate values only valid for side milling process!
At groove milling process the feed rate has to be reduced by 30 - 50 %, depending on the insert width!

Example:
Side milling
Material: Steel

Cutter Ø 90 mm
SW 24 mm (Ø 27.7 mm)
$v_{c\,eff}$ = 448.00 m/min
f_z = 0.08 mm
3 Cutting edges, l = 2:1
Flat length: 12 mm
Cycle time: ~ 2.19 s

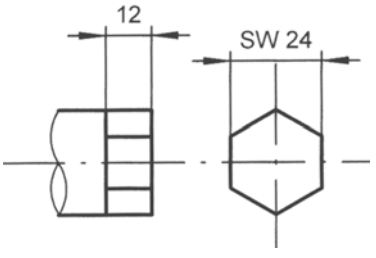

Tool:
n_{WZ} = 1372.00 mm^{-1}
$v_{c\,WZ}$ = 388.25 m/min

Workpiece:
n_{WS} = 686.00 mm^{-1}
$v_{c\,WS}$ = 59.75 m/min

K

生产厂商 Machine manufacturer	机床 Machine	铣刀 Cutter	可转位刀片 Indexable inserts	Z	n_{max} 铣刀 n_{max} Milling cutter
Gildemeister	GD32	L381.G070.15.04	L314.MK50.20 TN35	2/3	13,000 min-1
Gildemeister	GLD25	L381.G070.15.04	L314.MK50.20 TN35	2/3	13,000 min-1
Gildemeister	GM20-6	L381.G086.25.04	L314.MK50.20 TN35	2/3	11,000 min-1
Gildemeister	GM26-6	L381.G080.16.04	L314.MK40.20 TN35	2/3	12,000 min-1
Gildemeister	GM35-6	L381.G098.26.04	L314.MK50.20 TN35	2/3	10,000 min-1
Gildemeister	GM35-8	L381.G086.25.04	L314.MK50.20 TN35	2/3	11,000 min-1
Gildemeister	GM35-8	L381.G098.26.04	L314.MK50.20 TN35	2/3	10,000 min-1
Gildemeister	GM42-6	L381.G098.26.04	L314.MK50.20 TN35	2/3	10,000 min-1
Gildemeister	GMC35	L381.G086.25.04	L314.MK50.20 TN35	2/3	11,000 min-1
Gildemeister	GMC35	L381.G098.26.04	L314.MK50.20 TN35	2/3	10,000 min-1
Gildemeister	SPRINT20/32	L381.G080.16.04	L314.MK40.20 TN35	2/3	12,000 min-1
Gildemeister	SPRINT32L	L381.G090.22.04	L314.MK50.20 TN35	2/3	13,000 min-1
Gildemeister	SPRINT44L	L381.G090.22.04	L314.MK50.20 TN35	2/3	13,000 min-1
INDEX	ABC	R381.X090.27.04	R314.MK50.20 TN35	2/3	11,000 min-1
INDEX	ABC	L381.X090.27.04	L314.MK50.20 TN35	2/3	11,000 min-1
INDEX	MS25	L381.X073.16.04	N314.MK40.20 TN35	2/3	13,000 min-1
NAKAMURA	WT250	L381.N090.16.04	N314.MK40.20 TN35	2/3	11,000 min-1
Alfred H. Schütte	AF26	L381.S098.30.03	L314.MK70.M0 TN35	3	15,000 min-1*
Alfred H. Schütte	AF26	L381.S098.30.02	L314.MK70.M0 TN35	2	15,000 min-1*
Alfred H. Schütte	AF32	L381.S098.30.03	L314.MK70.M0 TN35	3	15,000 min-1*
Alfred H. Schütte	AF32	L381.S098.30.02	L314.MK70.M0 TN35	2	15,000 min-1*
Alfred H. Schütte	AF42	L381.S118.30.03	L314.MK70.M0 TN35	3	12,000 min-1*
Alfred H. Schütte	AF42	L381.S118.30.02	L314.MK70.M0 TN35	2	12,000 min-1*
Alfred H. Schütte	AG18	L381.S078.30.03	L314.MK70.M0 TN35	3	20,000 min-1*
Alfred H. Schütte	AG18	L381.S078.30.02	L314.MK70.M0 TN35	2	20,000 min-1*
Alfred H. Schütte	SE18	L381.S098.30.03	L314.MK70.M0 TN35	3	15,000 min-1*
Alfred H. Schütte	SE18	L381.S098.30.02	L314.MK70.M0 TN35	2	15,000 min-1*
Alfred H. Schütte	SF20	L381.S098.30.03	L314.MK70.M0 TN35	3	15,000 min-1*
Alfred H. Schütte	SF20	L381.S098.30.02	L314.MK70.M0 TN35	2	15,000 min-1*
Alfred H. Schütte	SF26L	L381.S098.30.03	L314.MK70.M0 TN35	3	15,000 min-1*
Alfred H. Schütte	SF26L	L381.S098.30.02	L314.MK70.M0 TN35	2	15,000 min-1*
Alfred H. Schütte	SF26	L381.S098.30.03	L314.MK70.M0 TN35	3	15,000 min-1*
Alfred H. Schütte	SF26S	L381.S098.30.03	L314.MK70.M0 TN35	3	15,000 min-1*
Alfred H. Schütte	SF26S	L381.S098.30.02	L314.MK70.M0 TN35	2	15,000 min-1*
Alfred H. Schütte	SF26	L381.S098.30.02	L314.MK70.M0 TN35	2	15,000 min-1*
Alfred H. Schütte	SF32	L381.S118.30.03	L314.MK70.M0 TN35	3	12,000 min-1*
Alfred H. Schütte	SF32	L381.S118.30.02	L314.MK70.M0 TN35	2	12,000 min-1*
Alfred H. Schütte	SF42	L381.S118.30.03	L314.MK70.M0 TN35	3	12,000 min-1*
Alfred H. Schütte	SF42	L381.S118.30.02	L314.MK70.M0 TN35	2	12,000 min-1*
Alfred H. Schütte	SF51	L381.S118.30.03	L314.MK70.M0 TN35	3	12,000 min-1*
Alfred H. Schütte	SF51	L381.S118.30.02	L314.MK70.M0 TN35	2	12,000 min-1*
Alfred H. Schütte	SF67	L381.S118.30.03	L314.MK70.M0 TN35	3	12,000 min-1*
Alfred H. Schütte	SF67	L381.S118.30.02	L314.MK70.M0 TN35	2	12,000 min-1*

概要 机床厂商
Overview Machine manufacturer

生产厂商 Machine manufacturer	机床 Machine	铣刀 Cutter	可转位刀片 Indexable inserts	Z	n_{max} 铣刀 n_{max} Milling cutter
Alfred H. Schütte	SG18	L381.S078.30.03	L314.MK70.M0 TN35	3	20,000 min-1*
Alfred H. Schütte	SG18	L381.S078.30.02	L314.MK70.M0 TN35	2	20,000 min-1*
Alfred H. Schütte	SG20	L381.S078.30.03	L314.MK70.M0 TN35	3	20,000 min-1*
Alfred H. Schütte	SG20	L381.S078.30.02	L314.MK70.M0 TN35	2	20,000 min-1*
Star	SR-20J	L381.A060.12.04	314.MK40.20	1/3	12,000 min-1
TORNOS	Deco7/10	R/LM275.D040.10.04	R/LS275.MK13.M0 TN35	2/3	15,000 min-1
TORNOS	Deco13	L381.D080.16.04	N314.MK40.20 TN35	2/3	12,000 min-1
TORNOS	Deco20	L381.D080.16.04	N314.MK40.20 TN35	2/3	12,000 min-1
TORNOS	Deco26	L381.D080.16.04	N314.MK40.20 TN35	2/3	12,000 min-1
TORNOS	Deco2000	L381.D080.16.04	N314.MK40.20 TN35	2/3	12,000 min-1
TORNOS	Multi Deco	L381.D086.25.04	L314.MK50.20 TN35	3	15,000 min-1
TRAUB	TNL12-7	RM275.T064.33.03	RS275.MK13.M0TN35	3	13,000 min-1
TRAUB	TNL12-7	L381.T069.12.04	N314.MK40.20 TN35	2/3	13,000 min-1
TRAUB	TNL26	L381.T069.12.04	N314.MK40.20 TN35	2/3	13,000 min-1
TRAUB	TNK36	L381.T069.12.04	N314.MK40.20 TN35	2/3	13,000 min-1

多边形铣削的更详细要求
Polygon cutter for further machines upon request.

* 增强型卡槽
* reinforced pocket

K

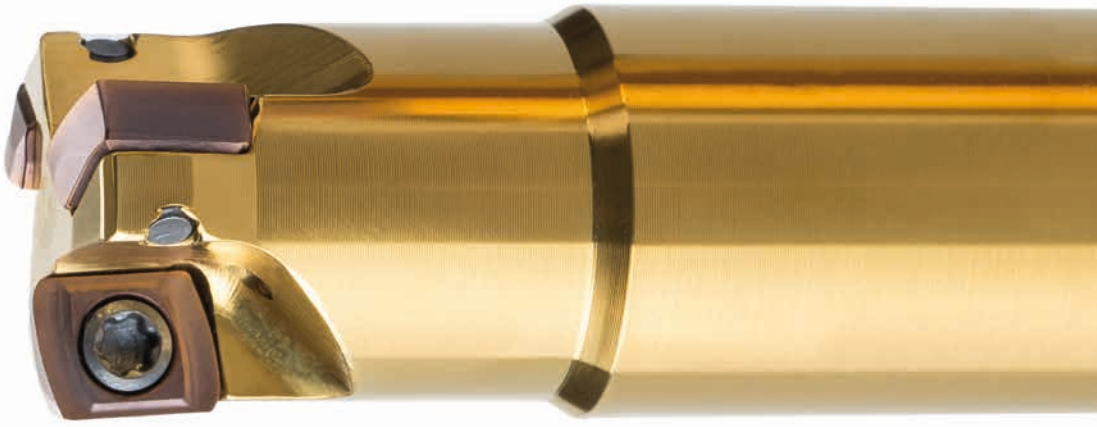

系列/System	页/Page
DA	**466**
DAH	**492**

L

杆式铣刀
End Mill
DAM31/DAM32/DAM62

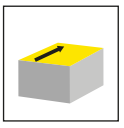

页/Page
468-472

芯轴刀柄式铣刀
Arbour Mounted Cutter
DAM32/DAM62

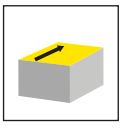

页/Page
473-474

螺纹锁紧铣刀
Screw-in cutter
DAM31/DAM32/DAM62

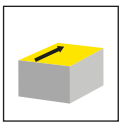

页/Page
475, 477

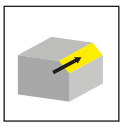

页/Page
476

接头
Adaptor
MD

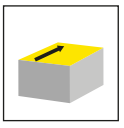

页/Page
478-479

异径
Reducer
MD

页/Page
480

接长杆
Extension
MD

页/Page
481

可转位刀片
Indexable insert
DA31/DA32/DA62/
SDA62

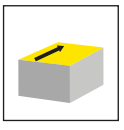

页/Page
482-483, 486-487

刀片
Insert
DA32

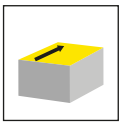

页/Page
484

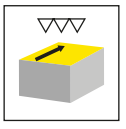

页/Page
485

DA

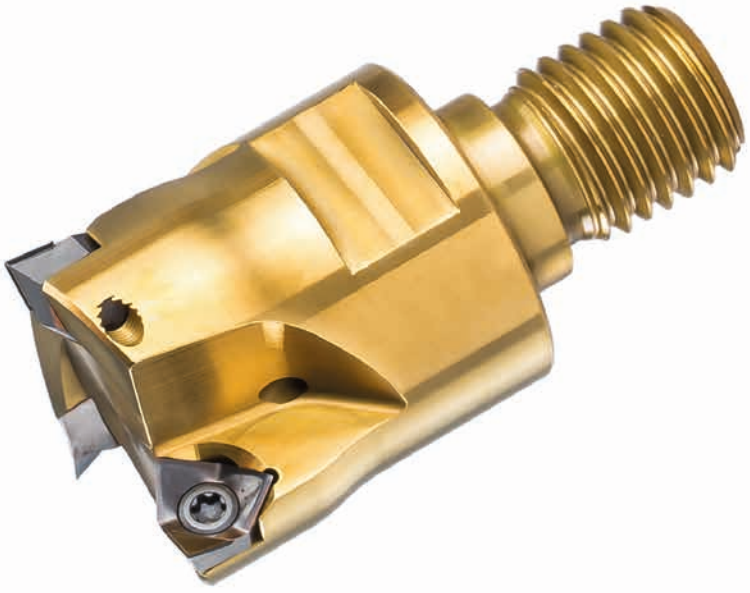

系列 DA

- 技术信息
- 芯轴刀柄式铣刀
- 螺纹锁紧铣刀
- 可转位刀片

System DA

- End Mill
- Arbour Mounted Cutter
- Screw-in Cutter
- Indexable Inserts

L

DAM31 / DAM32

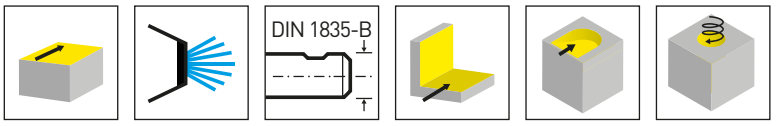

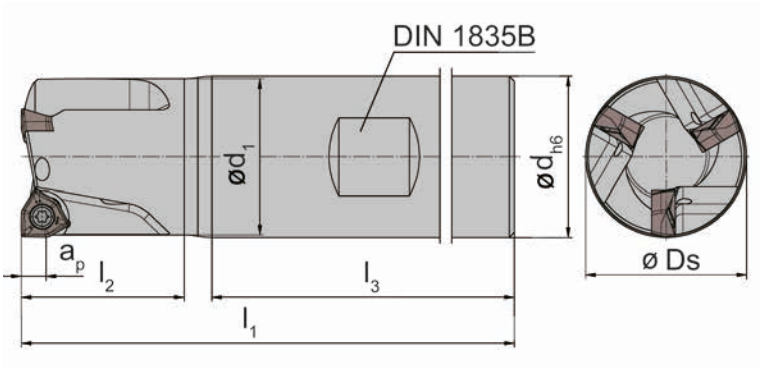

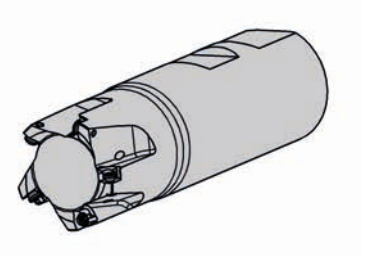

产品型号 Part number	Z	Ds	d	l_1	l_2	d_1	l_3	a_p	HWS
DAM31.016.D163.02B	2	16	16	79	17	15	54	3	DA3116
DAM31.020.D204.03B	3	20	20	86	21	19	59	3	DA3120
DAM31.025.D255.04B	4	25	25	97	27	24	64	3	DA3125
DAM31.032.D326.05B	5	32	32	106	32	31	68	3	DA3132
DAM32.020.D205.02B	2	20	20	87	22	19	19	4.8	DA3220
DAM32.025.D256.03B	3	25	25	102	32	24	64	4.8	DA3225
DAM32.032.D327.03B	3	32	32	106	32	31	68	4.8	DA3232

Ø25mm以上为2个夹持面
from Ø 25 mm 2 clamping flats

配件
Spare Parts

杆式铣刀 End Mill	锁紧螺钉 Clamping Screw	TORX PLUS®扳手 TORX PLUS® Wrench
DAM31.016.D163.02B	**030.2541.T8P**	**T8PL**
DAM31.020.D204.03B	**030.2547.T8P**	**T8PL**
DAM31.025.D255.04B	**030.2553.T8P**	**T8PL**
DAM31.032.D326.05B	**030.2557.T8P**	**T8PL**
DAM32.020.D205.02B	**030.3562.T10P**	**T10PL**
DAM32.025.D256.03B	**030.3569.T10P**	**T10PL**
DAM32.032.D327.03B	**030.3576.T10P**	**T10PL**

杆式铣刀
End Mill

DAM31

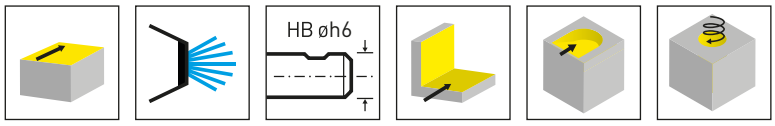

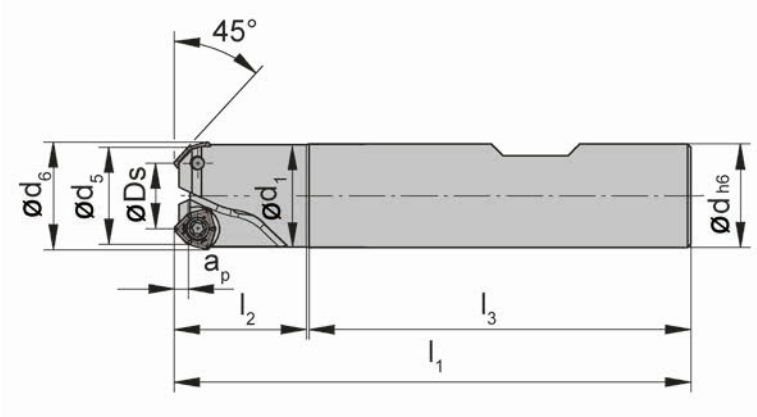

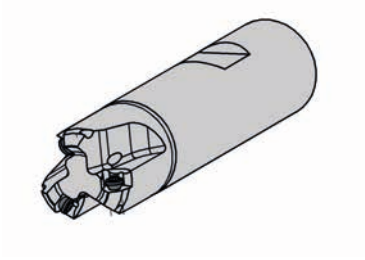

产品型号 Part number	Z	Ds	d	l_1	l_2	d_1	l_3	a_p	d_6	d_5	HWS
DAM31.411.D163.02B	2	10.4	16	80	20	15.8	59	2	16.9	15	DA3116
DAM31.414.D204.03B	3	14.4	20	87	23	18.8	62	2	20.9	19	DA3120

配件
Spare Parts

杆式铣刀 End Mill	锁紧螺钉 Clamping Screw	TORX PLUS®扳手 TORX PLUS® Wrench
DAM31.411.D163.02B	**030.2541.T8P**	**T8PL**
DAM31.414.D204.03B	**030.2547.T8P**	**T8PL**

L

DAM31

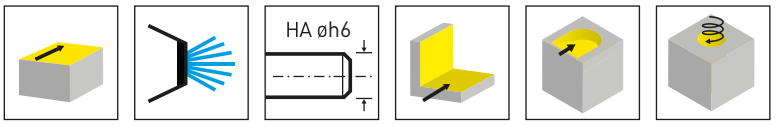

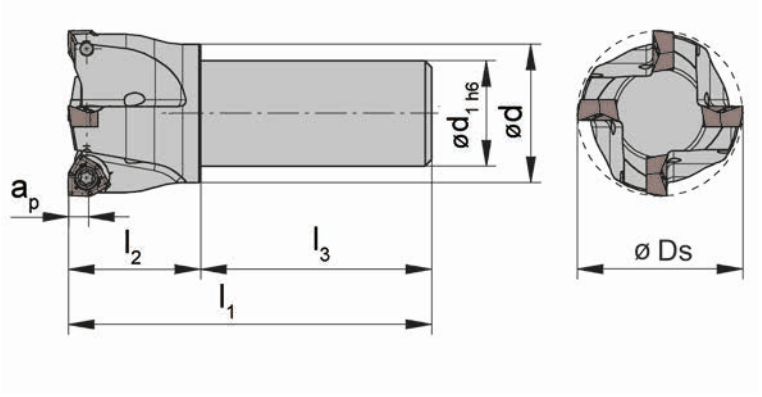

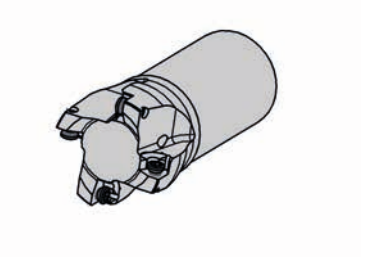

产品型号 Part number	Z	Ds	d	l_1	l_2	d_1	l_3	a_p	HWS
DAM31.020.D160.03A	3	20	19	52	17	16	35	3	DA3120
DAM31.025.D161.04A	4	25	24	55	20	16	35	3	DA3125
DAM31.032.D162.05A	5	32	31	60	25	16	35	3	DA3132
DAM31.032.D202.05A	5	32	31	60	25	20	35	3	DA3132

配件
Spare Parts

杆式铣刀 End Mill	锁紧螺钉 Clamping Screw	TORX PLUS®扳手 TORX PLUS® Wrench
DAM31.020.D160.03A	**030.2547.T8P**	**T8PL**
DAM31.025.D161.04A	**030.2553.T8P**	**T8PL**
DAM31.032....	**030.2557.T8P**	**T8PL**

DAM32

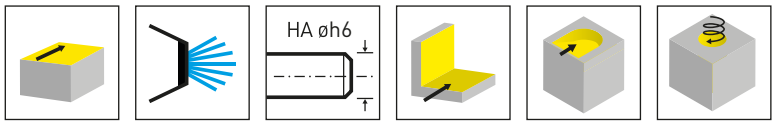

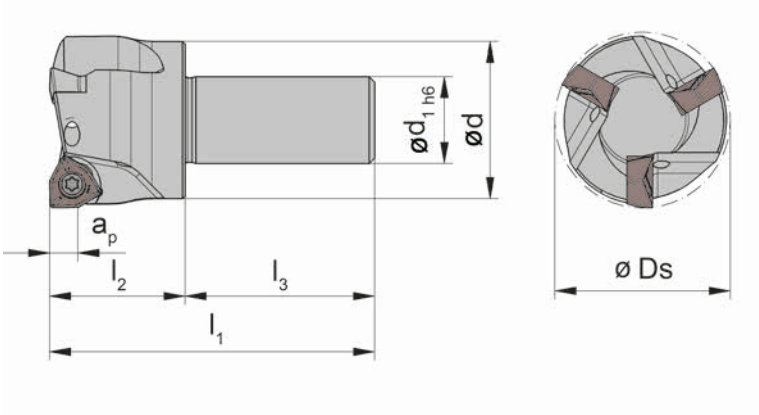

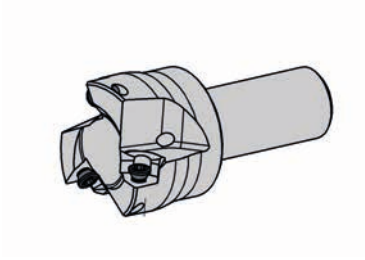

产品型号 Part number	Z	Ds	d	l_1	l_2	d_1	l_3	a_p	HWS
DAM32.020.D160.02A	2	20	19	52	17	16	35	4.5	DA3220
DAM32.025.D161.03A	3	25	24	55	20	16	35	4.5	DA3225
DAM32.032.D162.03A	3	32	31	60	25	16	35	4.5	DA3232

配件
Spare Parts

杆式铣刀 End Mill	锁紧螺钉 Clamping Screw	TORX PLUS®扳手 TORX PLUS® Wrench
DAM32.020.D160.02A	**030.3562.T10P**	**T10PL**
DAM32.025.D161.03A	**030.3569.T10P**	**T10PL**
DAM32.032.D162.03A	**030.3576.T10P**	**T10PL**

DAM62

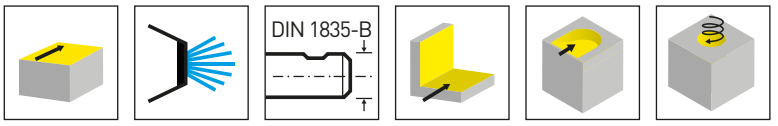

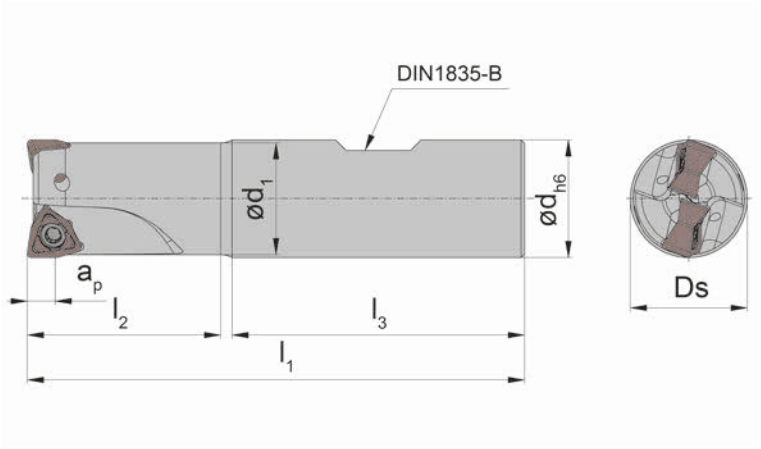

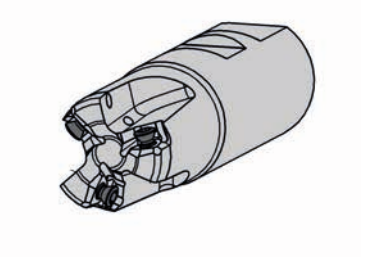

图示=右手型
Picture = right hand cutting version

产品型号 Part number	Z	Ds	d	l_1	l_2	d_1	l_3	a_p	HWS
DAM62.020.D20.4.02B	2	20	20	85	33	19	50	4.5	DA6200
DAM62.025.D25.5.03B	3	25	25	95	37	24	56	4.5	DA6200
DAM62.032.D32.6.04B	4	32	32	111	47	31	60	4.5	DA6200

L

配件
Spare Parts

杆式铣刀 End Mill	锁紧螺钉 Clamping Screw	TORX PLUS®扳手 TORX PLUS® Wrench
DAM62...	**030.3070.T10P**	**T10PL**

芯轴刀柄式铣刀
Arbour Mounted Cutter

DAM32

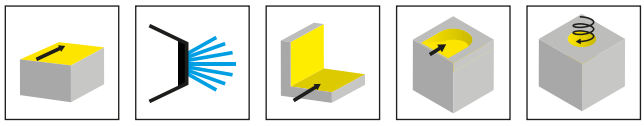

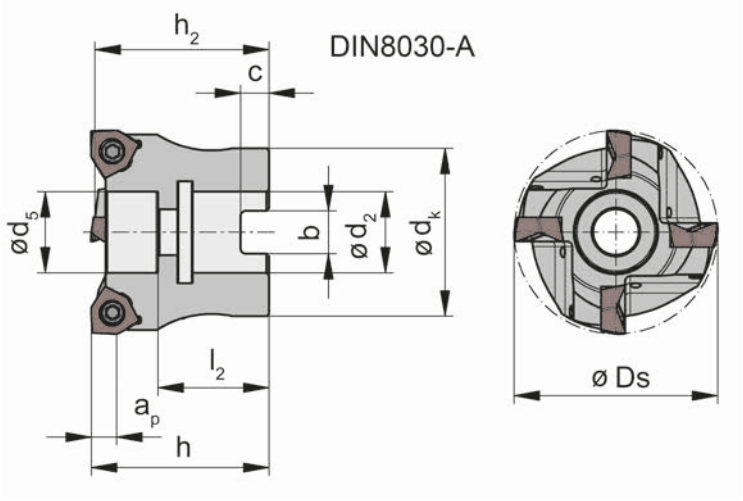

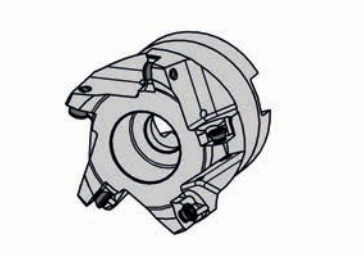

图示=右手型
Picture = right hand cutting version

产品型号 Part number	Z	Ds	a_p	h_2	h	d_5	d_2	l_2	b	C	d_K	HWS
DAM32.040.A1635.04	4	40	4.8	34.4	35	16	16	22	8.4	5.6	33	DA3232
DAM32.050.A2240.05	5	50	4.8	39.4	40	19.5	22	24	10.4	6.3	41	DA3232
DAM32.063.A2745.06	6	63	4.8	44.4	45	21.5	27	27	12.4	7	49	DA3232

配件
Spare Parts

芯轴刀柄式铣刀 Arbour Mounted Cutter	锁紧螺钉 Clamping Screw	TORX PLUS®扳手 TORX PLUS® Wrench
DAM32...	**030.3576.T10P**	**T10PL**

L

芯轴刀柄式铣刀
Arbour Mounted Cutter

DAM62

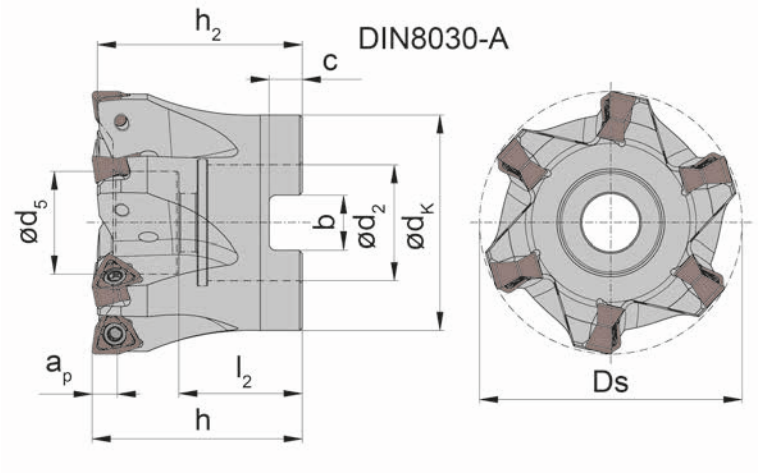

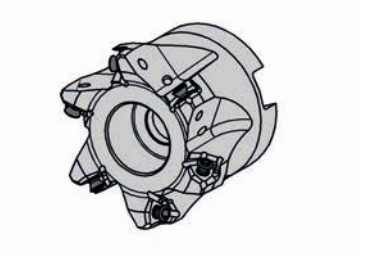

图示=右手型
Picture = right hand cutting version

产品型号 Part number	Z	Ds	a_p	h_2	h	d_5	d_2	l_2	b	C	d_K	HWS
DAM62.0040.A16.05	5	40	4.5	34	35	16	16	21.5	8.4	5.6	33	DA6200
DAM62.0050.A22.06	6	50	4.5	39	40	19.5	22	23.5	10.4	6.3	41	DA6200
DAM62.0063.A22.08	8	63	4.5	39	40	19.5	22	24	10.4	6.3	49	DA6200
DAM62.0080.A27.10	10	80	4.5	49	50	21.5	27	27.5	12.4	7	59	DA6200

L

配件
Spare Parts

芯轴刀柄式铣刀 Arbour Mounted Cutter	锁紧螺钉 Clamping Screw	TORX PLUS®扳手 TORX PLUS® Wrench
DAM62...	**030.3070.T10P**	**T10PL**

螺纹锁紧铣刀
Screw-in cutter

DAM31 / DAM32

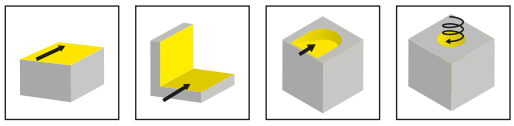

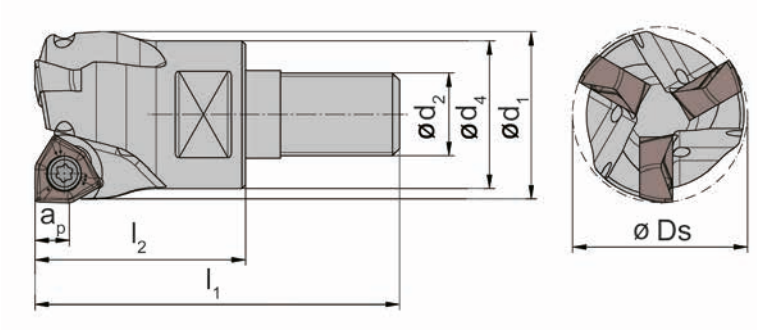

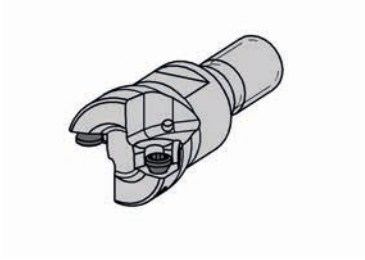

产品型号 Part number	Z	Ds	l_1	l_2	d_1	a_p	d_2	d_4	SW	HWS	HMS
DAM31.016.M083.02B	2	16	38	20	15	3	M8	13	10	DA3116	08001
DAM31.020.M104.03B	3	20	45	25	19	3	M10	18	15	DA3120	10001
DAM31.025.M125.04B	4	25	52	30	24	3	M12	21	17	DA3125	12001
DAM31.032.M166.05B	5	32	58	35	31	3	M16	29	24	DA3132	16001
DAM32.020.M104.02B	2	20	45	25	19	4.8	M10	18	15	DA3220	10001
DAM32.025.M125.03B	3	25	52	30	24	4.8	M12	21	17	DA3225	12001
DAM32.032.M166.03B	3	32	58	35	31	4.8	M16	29	24	DA3232	16001

配件
Spare Parts

螺纹锁紧铣刀 Screw-in cutter	锁紧螺钉 Clamping Screw	TORX PLUS®扳手 TORX PLUS® Wrench
DAM31.016.M083.02B	**030.2541.T8P**	**T8PL**
DAM31.020.M104.03B	**030.2547.T8P**	**T8PL**
DAM31.025.M125.04B	**030.2553.T8P**	**T8PL**
DAM31.032.M166.05B	**030.2557.T8P**	**T8PL**
DAM32.020.M104.02B	**030.3562.T10P**	**T10PL**
DAM32.025.M125.03B	**030.3569.T10P**	**T10PL**
DAM32.032.M166.03B	**030.3576.T10P**	**T10PL**

螺纹锁紧铣刀
Screw-in cutter

DAM31 / DAM32

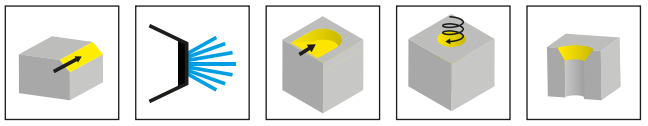

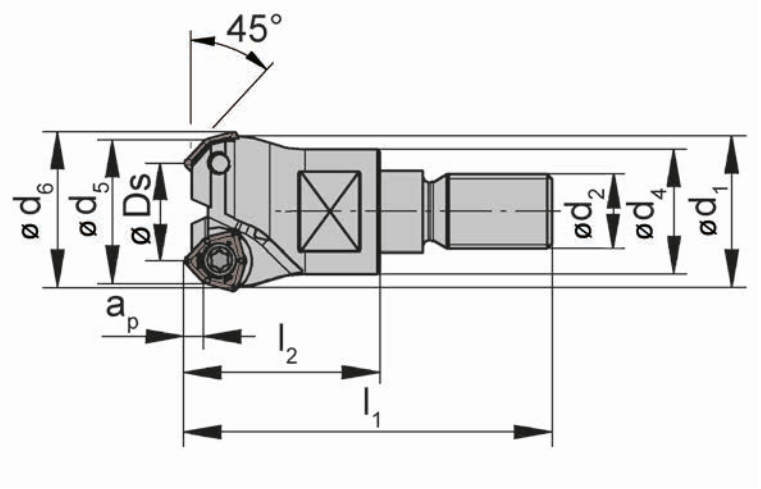

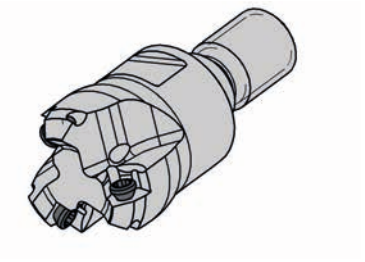

产品型号 Part number	Z	Ds	l_1	l_2	d_1	a_p	d_2	d_4	d_5	d_6	SW	HWS	HMS
DAM31.411.M083.02B	2	10.5	38	20	15.8	2	M8	13	15	16.9	10	DA3116	08001
DAM31.414.M104.03B	3	14.4	45	25	19.8	2	M10	18	19	20.9	15	DA3120	10001
DAM32.417.M125.03B	3	17.6	52	30	24.8	3.2	M12	21	24	28.3	17	DA3225	12001

配件
Spare Parts

螺纹锁紧铣刀 Screw-in cutter	锁紧螺钉 Clamping Screw	TORX PLUS®扳手 TORX PLUS® Wrench
DAM31.411.M083.02B	**030.2541.T8P**	**T8PL**
DAM31.414.M104.03B	**030.2547.T8P**	**T8PL**
DAM32.417.M125.03B	**030.3569.T10P**	**T10PL**

L

螺纹锁紧铣刀
Screw-in cutter

DAM62

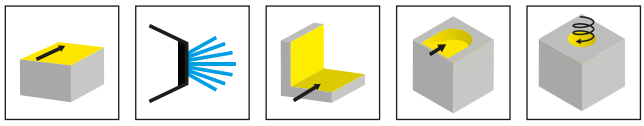

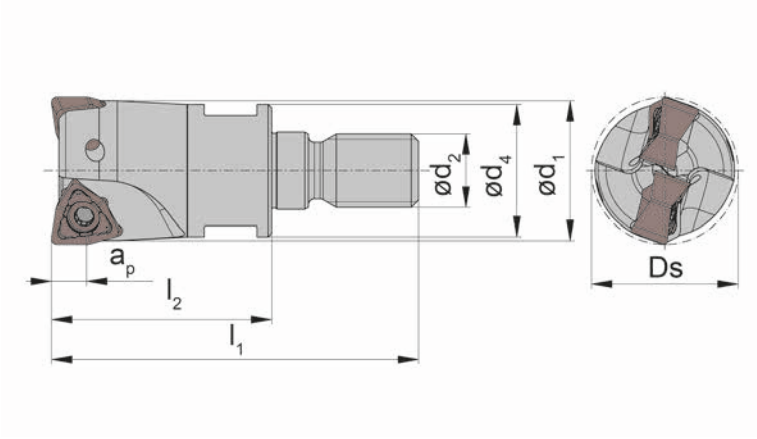

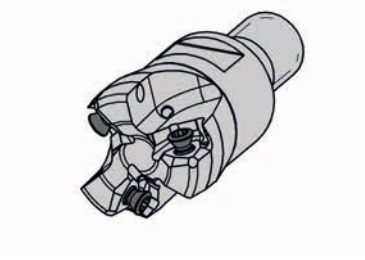

图示=右手型
Picture = right hand cutting version

产品型号 Part number	Z	Ds	l_1	l_2	d_1	a_p	d_2	d_4	SW	HWS	HMS
DAM62.025.M12.5.03	3	25	57	35	24	4.5	M12	21	17	DA6200	12001
DAM62.032.M16.6.04	4	32	66	43	31	4.5	M16	29	24	DA6200	16001

配件
Spare Parts

螺纹锁紧铣刀 Screw-in cutter	锁紧螺钉 Clamping Screw	TORX PLUS®扳手 TORX PLUS® Wrench
DAM62...	**030.3070.T10P**	**T10PL**

L

MD

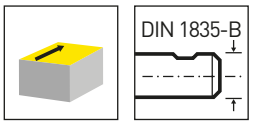

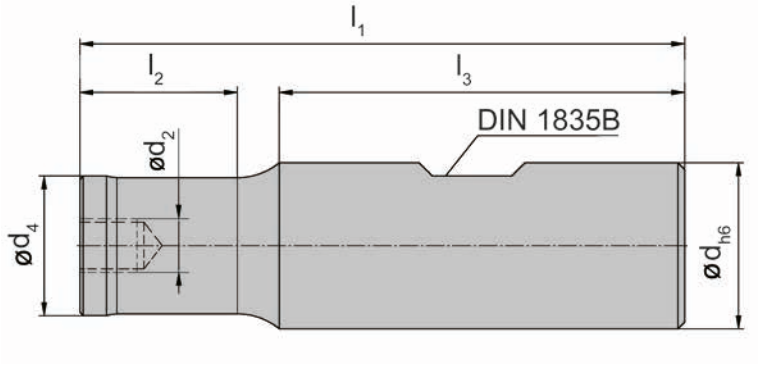

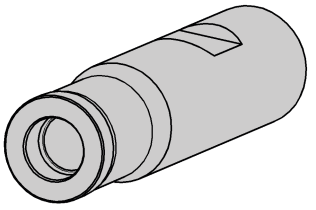

产品型号 Part number	l_1	l_2	l_3	d	d_4	d_2
MD13.02.00.D16B	73	14	53	16	13	M8
MD18.04.00.D20B	80	20	55	20	18	M10
MD21.06.00.D25B	91	23	61	25	21	M12
MD29.08.00.D32B	100	29	65	32	29	M16

Ø25mm以上为2个夹持面
from Ø 25 mm 2 clamping flats

L

MD

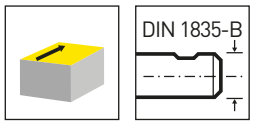

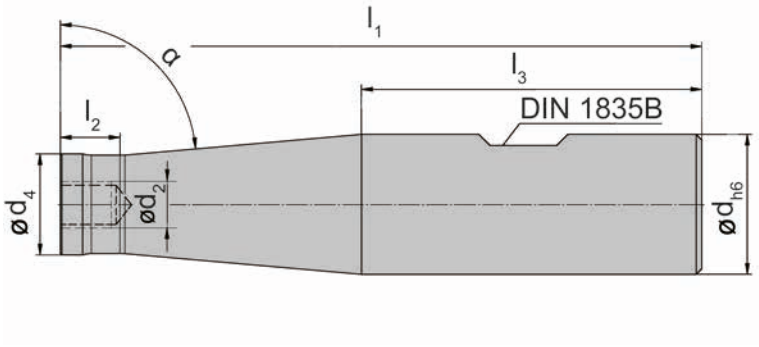

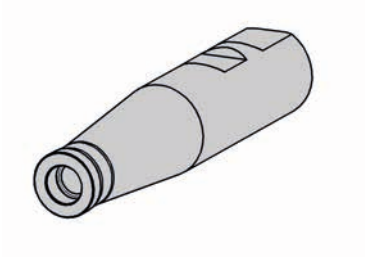

产品型号 Part number	l_1	l_2	l_3	d	d_4	d_2	α
MD13.02.85.D20B	105	7	55	20	13	M8	85°
MD18.04.85.D25B	115	10	61	25	18	M10	85°
MD21.06.85.D32B	140	8	65	32	21	M12	85°
MD29.08.85.D40B	150	8	75	40	29	M16	85°

Ø25mm以上为2个夹持面
from Ø 25 mm 2 clamping flats

L

MD

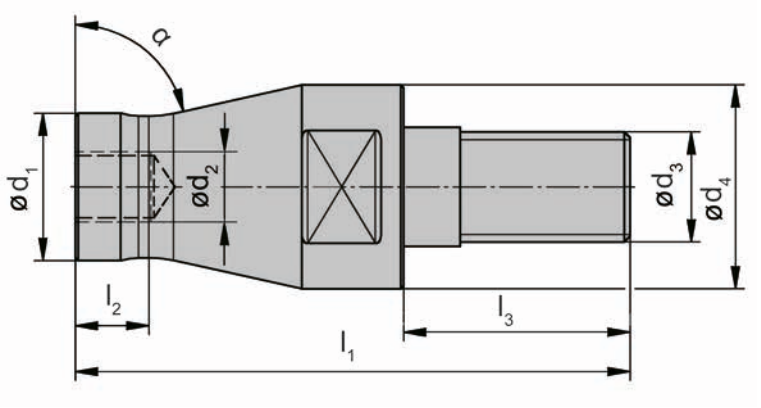

产品型号 Part number	l_1	l_2	l_3	d_1	d_2	d_3	d_4	SW	α
MD18.02.77.M10	49	6	20	13	M8	M10	18	15	77.5°
MD21.04.77.M12	56	10	22	18	M10	M12	21	17	77.5°
MD29.06.77.M16	52	6	23	21	M12	M16	29	24	77.5°

MD

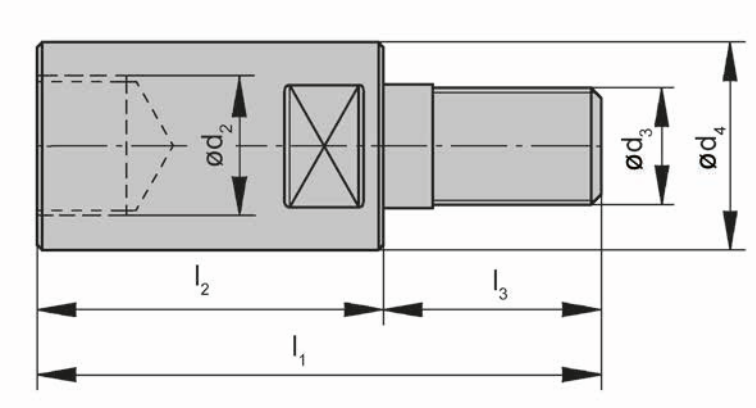

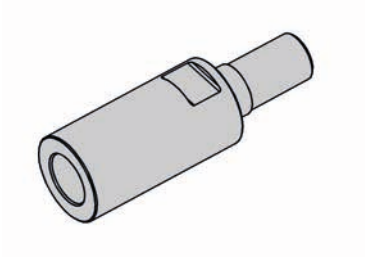

产品型号 Part number	l_1	l_2	l_3	d_2	d_3	d_4	SW
MD13.02.00.M08	48	30	18	M8	M8	13	10
MD18.04.00.M10	55	35	20	M10	M10	18	15
MD21.06.00.M12	57	35	22	M12	M12	21	17
MD29.08.00.M16	58	35	23	M16	M16	29	24

可转位刀片
Indexable insert

DA31

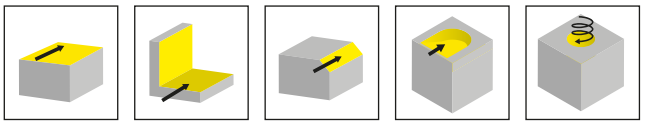

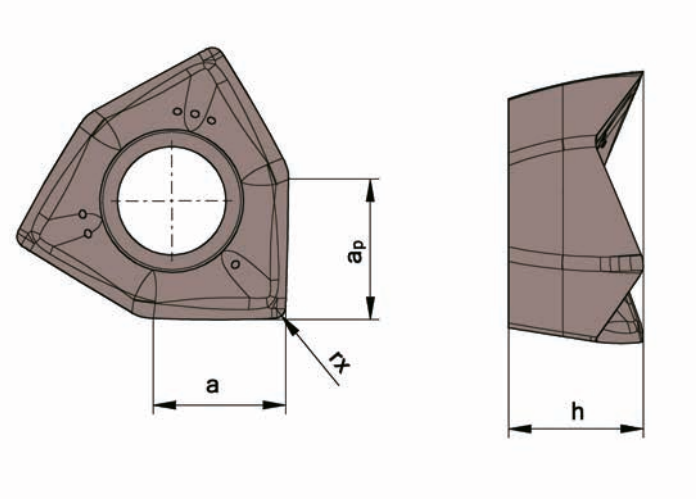

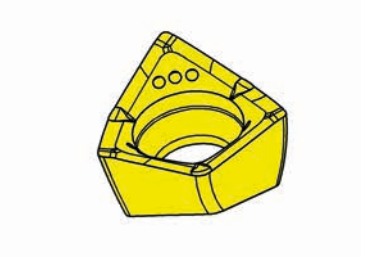

硬质合金牌号
Carbide grades

▲ 库存
on stock

Δ 4周
4 weeks

产品型号 Part number	Ds	a_p	a	h	r_x	HIS	SA4B	TA45
DA31.016.A.00	16	3	3	3.1	-	DA3116	▲	▲
DA31.016.A.02	16	3	3	3.1	0.2	DA3116	▲	▲
DA31.016.A.04	16	3	3	3.1	0.4	DA3116	▲	▲
DA31.020.A.00	20	3	3	3.1	-	DA3120	Δ	▲
DA31.020.A.02	20	3	3	3.1	0.2	DA3120	▲	▲
DA31.020.A.04	20	3	3	3.1	0.4	DA3120	▲	▲
DA31.025.A.00	25	3	3	3.1	-	DA3125	▲	
DA31.025.A.02	25	3	3	3.1	0.2	DA3125	▲	▲
DA31.025.A.04	25	3	3	3.1	0.4	DA3125	▲	Δ
DA31.032.A.00	32	3	3	3.1	-	DA3132		
DA31.032.A.02	32	3	3	3.1	0.2	DA3132	▲	▲
DA31.032.A.04	32	3	3	3.1	0.4	DA3132	▲	▲

	SA4B	TA45
P	●	●
M	●	●
K	●	●
N	●	●
S	-	●
H	-	-

硬质合金牌号TA45适用于易加工材料，铝和精加工。硬质合金牌号SA4B适用于中等和难加工材料。
Carbide grade TA45 preferred for easy to machine materials, aluminium and finishing. Carbide grade SA4B preferred for middle and difficult to machine materials.

L

可转位刀片
Indexable insert

DA32

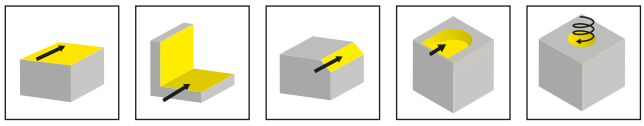

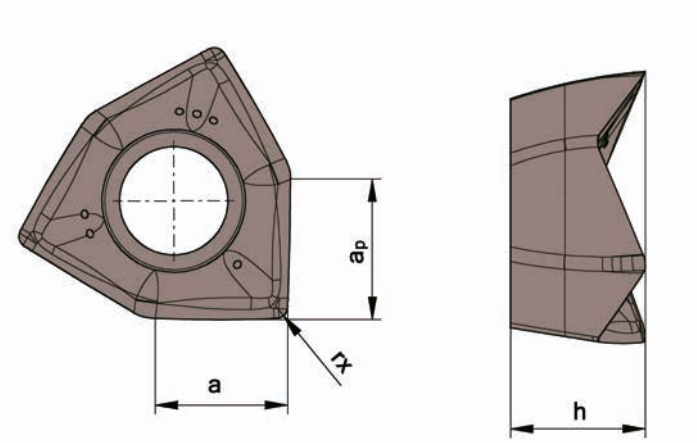

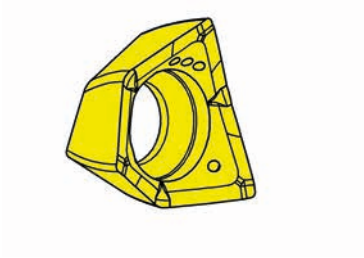

硬质合金牌号
Carbide grades

▲ 库存
on stock

Δ 4周
4 weeks

产品型号 Part number	Ds	a_p	a	h	r_x	HIS	SA4B	TA45
DA32.020.A.00	20	4.8	4.6	4.7	-	DA3220	Δ	Δ
DA32.020.A.02	20	4.8	4.6	4.7	0.2	DA3220	▲	Δ
DA32.020.A.04	20	4.8	4.6	4.7	0.4	DA3220	▲	
DA32.020.A.08	20	4.8	4.6	4.7	0.8	DA3220	▲	▲
DA32.020.A.10	20	4.8	4.6	4.7	1	DA3220	▲	▲
DA32.025.A.00	25	4.8	4.6	4.7	-	DA3225	Δ	Δ
DA32.025.A.02	25	4.8	4.6	4.7	0.2	DA3225	▲	Δ
DA32.025.A.04	25	4.8	4.6	4.7	0.4	DA3225	▲	▲
DA32.025.A.08	25	4.8	4.6	4.7	0.8	DA3225	▲	▲
DA32.025.A.10	25	4.8	4.6	4.7	1	DA3225	Δ	▲
DA32.032.A.00	32	4.8	4.6	4.7	-	DA3232	Δ	Δ
DA32.032.A.02	32	4.8	4.6	4.7	0.2	DA3232	▲	▲
DA32.032.A.04	32	4.8	4.6	4.7	0.4	DA3232	▲	▲
DA32.032.A.08	32	4.8	4.6	4.7	0.8	DA3232	▲	▲
DA32.032.A.10	32	4.8	4.6	4.7	1	DA3232	▲	▲

硬质合金牌号TA45适用于易加工材料，铝和精加工。硬质合金牌号SA4B适用于中等和难加工材料。
Carbide grade TA45 preferred for easy to machine materials, aluminium and finishing. Carbide grade SA4B preferred for middle and difficult to machine materials.

	SA4B	TA45
P	●	●
M	●	●
K	●	●
N	●	●
S	-	●
H	-	-

L

DA32

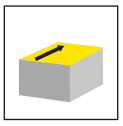
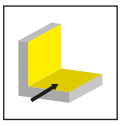

CVD-D

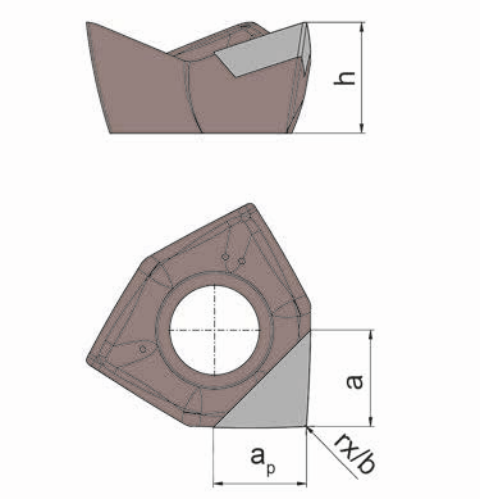

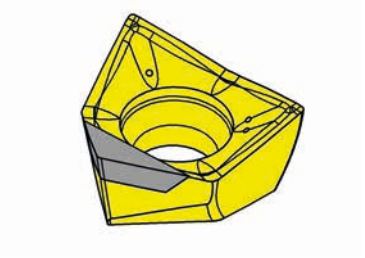

硬质合金牌号
Carbide grades

▲ 库存
on stock

Δ 4周
4 weeks

产品型号 Part number	Ds	a_p	a	h	r_x	b x 45°	HIS		HD05
DA32.020.25.02.C	20	3.8	3.5	4.7	0.2	-	DA3220		▲
DA32.020.25.X2.C	20	3.8	3.5	4.7	-	0.2	DA3220		Δ
DA32.025.25.02.C	25	3.8	3.5	4.7	0.2	-	DA3225		▲
DA32.025.25.X2.C	25	3.8	3.5	4.7	-	0.2	DA3225		Δ
DA32.032.25.02.C	32	3.8	3.5	4.7	0.2	-	DA3232		▲
DA32.032.25.X2.C	32	3.8	3.5	4.7	-	0.2	DA3232		▲
								P	-
								M	-
								K	-
								N	●
								S	-
								H	-

L

DA32

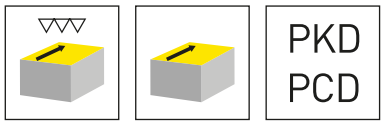

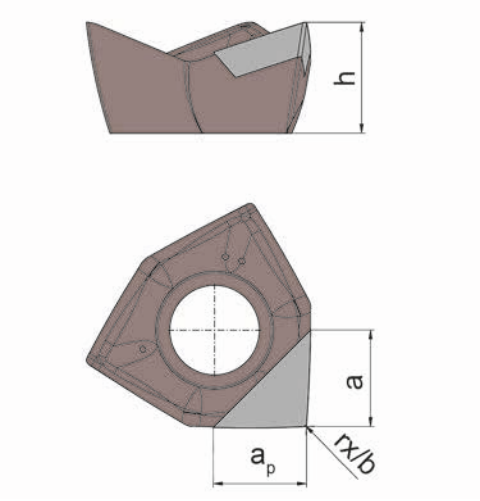

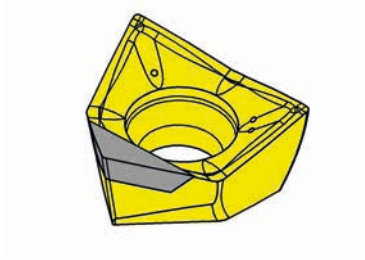

硬质合金牌号
Carbide grades

▲ 库存
on stock

Δ 4周
4 weeks

产品型号 Part number	Ds	a_p	a	h	r_x	HIS		PD75
DA32.020.25.02.P	20	3.8	3.5	4.7	0.2	DA3220		▲
DA32.025.25.02.P	25	3.8	3.5	4.7	0.2	DA3225		▲
DA32.032.25.02.P	32	3.8	3.5	4.7	0.2	DA3232		▲
							P	-
							M	-
							K	-
							N	●
							S	-
							H	-

L

可转位刀片
Indexable insert

DA62

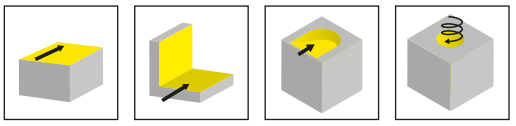

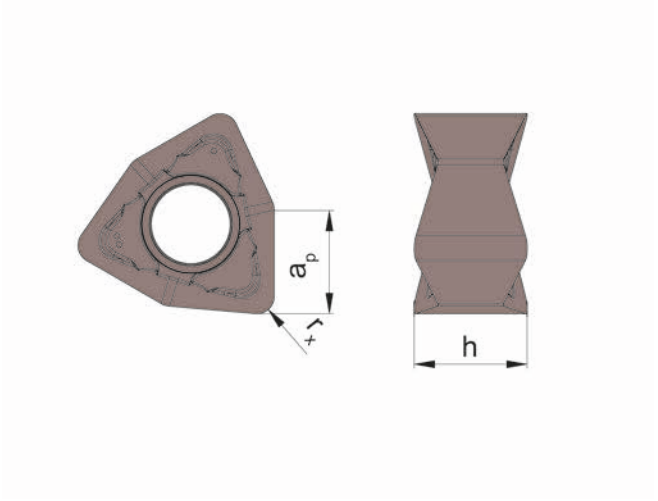

硬质合金牌号
Carbide grades

▲ 库存
on stock

Δ 4周
4 weeks

产品型号 Part number	a_p	h	r_x	HIS		SA4B	SD6A
DA62.0400.A.04	4.5	5.2	0.4	DA6200		▲	▲
DA62.0400.A.08	4.5	5.16	0.8	DA6200		▲	▲
					P	●	o
					M	●	-
					K	●	●
					N	●	-
					S	-	-
					H	-	-

L

可转位刀片
Indexable insert

SDA62

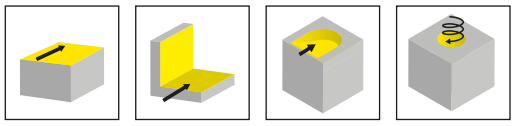

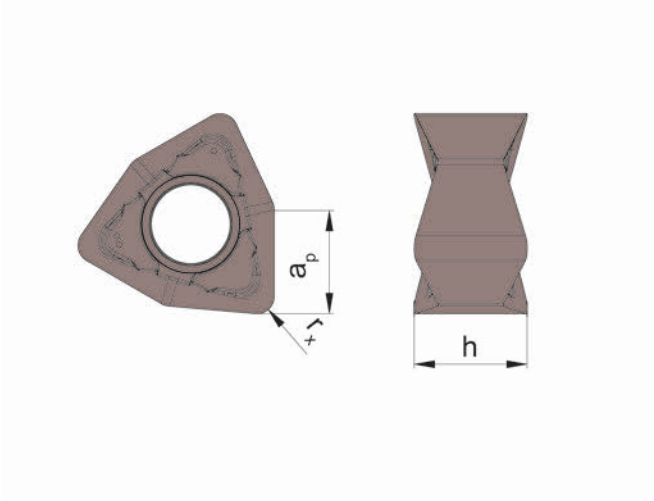

硬质合金牌号
Carbide grades

▲ 库存
on stock

Δ 4周
4 weeks

产品型号 Part number	a_p	h	r_x	HIS		SA4B
SDA62.0400.A.08	4.5	5.16	0.8	DA6200		▲
精密烧结 precision sintered					P	●
					M	●
					K	●
					N	●
					S	-
					H	-

L

进给率 DA31 / DA32
Feed Rate

ISO	刀片规格 DA31 进给/齿 f_z (mm) Insert size DA31 Feed/tooth f_z (mm)	刀片规格 DA32 进给/齿f_z (mm) Insert size DA32 Feed/tooth f_z (mm)
P	0.03 - 0.15	0.04 - 0.25
M	0.03 - 0.12	0.03 - 0.17
K	0.03 - 0.15	0.04 - 0.25
N	0.03 - 0.40	0.04 - 0.50
S	0.03 - 0.08	0.03 - 0.15

45° 铣削每齿进给可增加1.4倍
When 45° Milling the feed per tooth f_z could be increased by factor 1.4.

切削速度可在本样本的第N章中找到。
Cutting speeds can be found in chapter N in this catalogue.

L

坡走铣和插铣-90°铣刀
Ramp angle and plunging with a 90° milling cutter

Ø (mm) 刀片规格 / Insert size	32 DA32	25 DA32	20 DA32	32 DA31	25 DA31	20 DA31	16 DA31
切入角 (°) Plunge angle (°)	3.5°	3.5°	3.5°	4.0°	3.5°	3.5°	3.0°
垂直方向满切最大切深 (mm) vertical full diving max. (mm)	1.0	0.6	0.4	1.7	0.8	0.6	0.4
侧面铣削ae a_e (mm) vertical side diving a_e max. (mm)	4.6	4.6	4.6	3.1	3.1	3.1	3.1
底孔最小径D_b (mm) Predrilling D_b min. (mm)	22.8	15.8	10.8	25.8	18.8	13.8	9.8

坡走铣和插铣-45°铣刀
Ramp angle and plunging with a 45° milling cutter

Ø (mm) 刀片规格 / Insert size	17 DA32	14.4 DA31	10.5 DA31
切入角 (°) Plunge angle (°)	11°	7°	10.5°
垂直方向满切最大切深 (mm) vertical full diving max. (mm)	3.2	2.0	2.0

45°铣削时考虑圆角半径后切削深度的修正系数
Correction factor for reduced cutting depth in consideration to the corner radius when 45° milling

圆角刀尖 r_x (mm) Corner radius r_x (mm)	修正系数 f_{ap} (mm) Correction factor f_{ap} (mm)
0	0
0.2	0.078
0.4	0.17
0.8	0.33
1.0	0.41

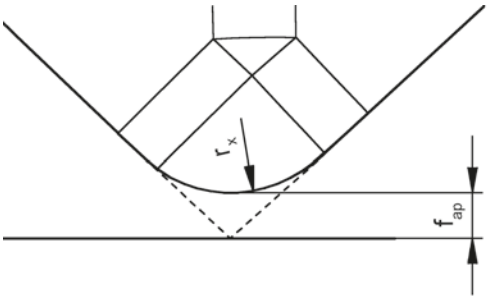

L

进给率 DA62
Feed Rate

ISO	进给/齿 f_z (mm) Feed/tooth f_z (mm)
P	0.04 - 0.25
M	0.03 - 0.17
K	0.04 - 0.25
N	0.04 - 0.50
S	0.03 - 0.15

切削刃Ø Cutting edge Ø [mm]	切入角 Plunge angle [°]
20	2.4
25	1.75
32	1.25
40	0.95
50	0.7
63	0.55
80	0.4

切削速度可在本样本的第N章中找到。
Cutting speeds can be found in chapter N in this catalogue.

L

杆式铣刀
End Mill
DAHM25/DAHM37/
DAHM82

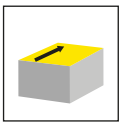

页/Page
494-495, 500, 507

螺纹锁紧铣刀
Screw-in cutter
DAHM25/DAHM37/
DAHM82

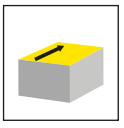

页/Page
496, 501, 508

可转位刀片
Indexable insert
DAH25/DAH37/DAH82/
DAH84

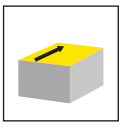

页/Page
497, 503-504, 510, 512

芯轴刀柄式铣刀
Arbour Mounted Cutter
DAHM37/DAHM82/
DAHM84

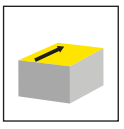

页/Page
502, 509, 511

DAH

高进给铣削系列DAH

- 技术信息
- 芯轴刀柄式铣刀
- 螺纹锁紧铣刀
- 可转位刀片

High feed milling System DAH

- End Mill
- Arbour Mounted Cutter
- Screw-in Cutter
- Indexable Inserts

L

DAHM25

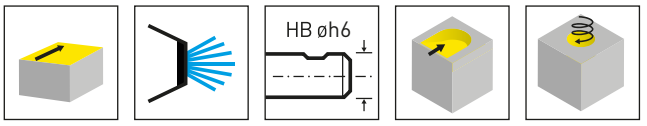

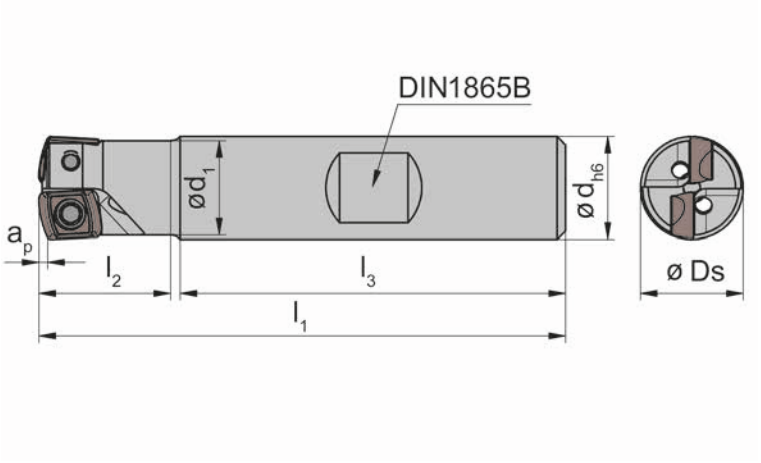

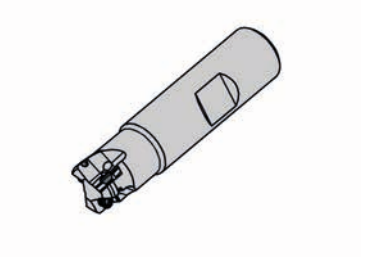

产品型号 Part number	Z	Ds	d	l_1	l_2	d_1	l_3	a_p	HWS
DAHM.25.012.D122.02B	2	12	12	61.5	15	11	45	1	DAH25
DAHM.25.016.D163.03B	3	16	16	69.5	20	14.5	48	1	DAH25
DAHM.25.020.D204.03B	3	20	20	76.5	25	18	50	1	DAH25

L

配件
Spare Parts

杆式铣刀 End Mill	锁紧螺钉 Clamping Screw	TORX PLUS®扳手 TORX PLUS® Wrench
DAHM.25.012.D122.02B	**030.2547.T8P**	**T8PL**
DAHM.25....	**030.2553.T8P**	**T8PL**

DAHM25

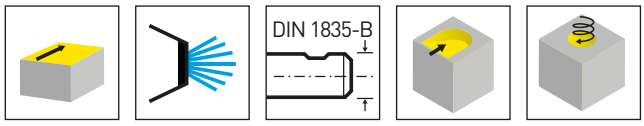

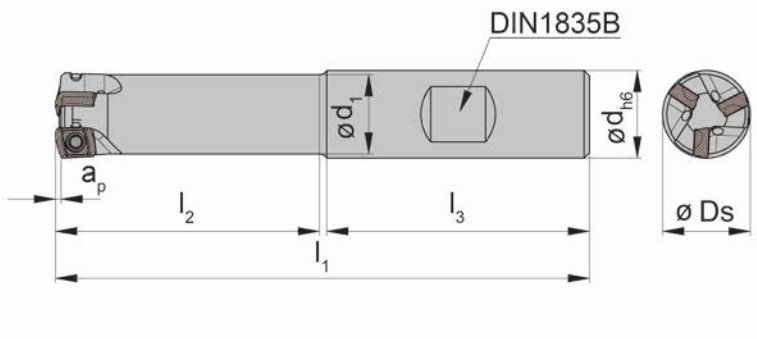

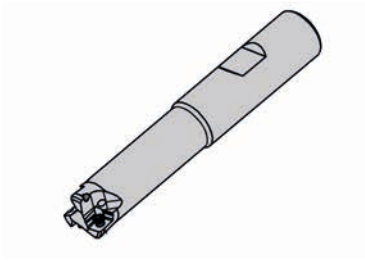

产品型号 Part number	Z	Ds	d	l_1	l_2	d_1	l_3	a_p	HWS
DAHM.25.012.D124.02B	2	12	12	82.5	36	11.5	45	1	DAH25
DAHM.25.016.D165.02B	2	16	16	97.5	48	15.4	48	1	DAH25
DAHM.25.016.D165.03B	3	16	16	97.5	48	15.4	48	1	DAH25
DAHM.25.020.D206.03B	3	20	20	111.5	60	19	50	1	DAH25
DAHM.25.025.D257.04B	4	25	25	132.5	75	24	56	1	DAH25

配件
Spare Parts

杆式铣刀 End Mill	锁紧螺钉 Clamping Screw	TORX PLUS®扳手 TORX PLUS® Wrench
DAHM.25.012.D124.02B	**030.2547.T8P**	**T8PL**
DAHM.25....	**030.2553.T8P**	**T8PL**

螺纹锁紧铣刀
Screw-in cutter

DAHM25

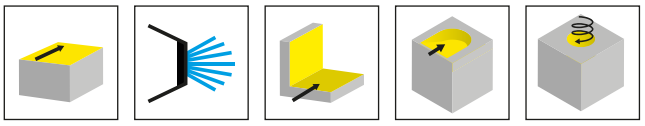

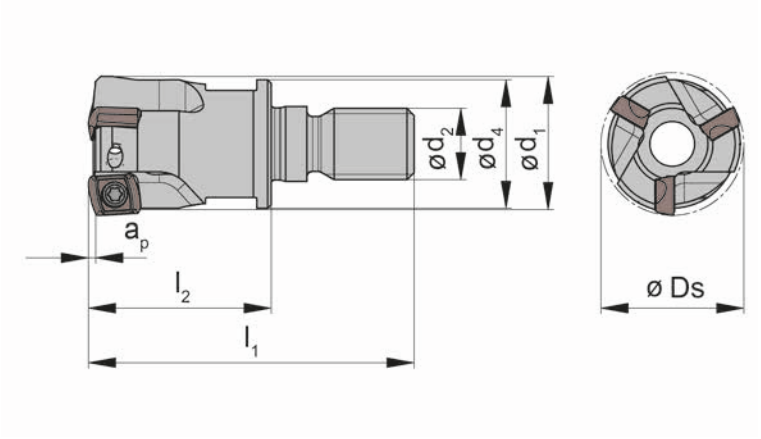

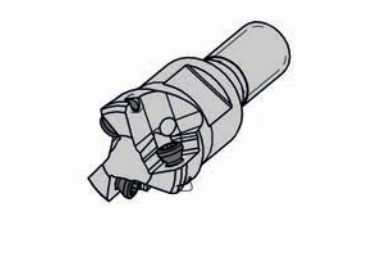

产品型号 Part number	Z	Ds	l_1	l_2	d_1	a_p	d_2	d_4	HWS	HMS
DAHM.25.012.M062.02	2	12	26	13.5	11	1	M6	11.5	DAH25	6001
DAHM.25.016.M083.02	2	16	39	20.5	13	1	M8	15.4	DAH25	08001
DAHM.25.016.M083.03	3	16	39	20.5	13	1	M8	15.4	DAH25	08001
DAHM.25.020.M104.03	3	20	45	25.5	18	1	M10	19	DAH25	10001
DAHM.25.025.M125.04	4	25	50	28	21	1	M12	24	DAH25	12001

L

配件
Spare Parts

螺纹锁紧铣刀 Screw-in cutter	锁紧螺钉 Clamping Screw	TORX PLUS®扳手 TORX PLUS® Wrench
DAHM.25.012.M062.02	**030.2547.T8P**	**T8PL**
DAHM.25....	**030.2553.T8P**	**T8PL**

DAH25

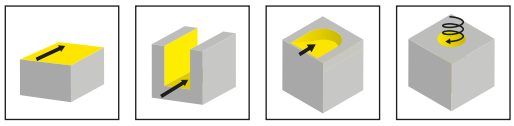

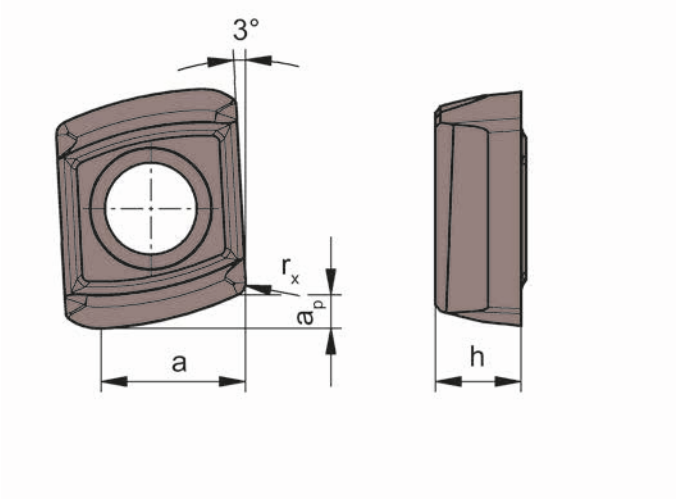

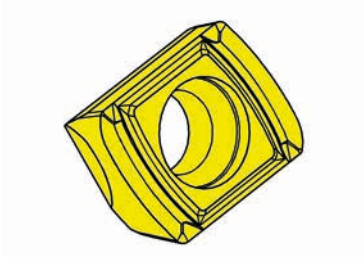

硬质合金牌号
Carbide grades

▲ 库存
on stock

Δ 4周
4 weeks

产品型号 Part number	a_p	a	h	r_x	HIS		SA4B
DAH.25.011.D.04	1	4.4	2.6	0.4	DAH25		▲
						P	●
						M	●
						K	●
						N	●
						S	-
						H	-

L

进给率 DAH25
Feed Rate

ISO	进给/齿 f_z (mm) Feed/tooth f_z (mm)
P	0.5 - 1.8
M	0.5 - 1.5
K	0.6 -1.8
N	0.8 - 2.5
S	0.5 - 1.5

切削速度可在本样本的第N章中找到。
Cutting speeds can be found in chapter N in this catalogue.

切入角 (°)
Plunge angle

Ø (mm)	切入角 (°) Plunge angle (°)
12	6.5
16	2.5
20	1.5
25	1.0

编程半径和偏差
Programming radius and difference

r_{th}(mm)	最大偏差 (mm) max. difference (mm)
1.4	0.61

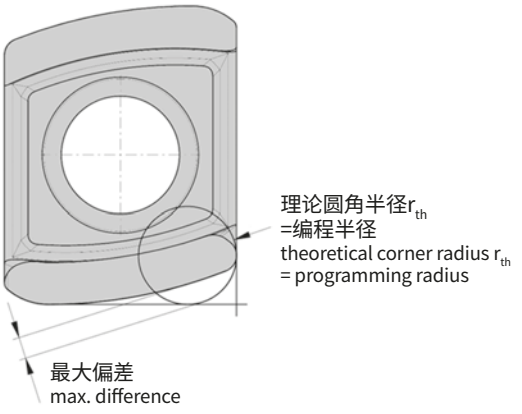

L

计算公式-DAH25系列
Formulas System DAH25

$Z =$ 齿数
Number of teeth

d_{eff} =有效切削刃Ø
effective cutting edge Ø

$n =$ 转速
Revolutions

$$n = \frac{v_c \cdot 1000}{d_{eff} \cdot \pi} \quad [1/min]$$

$v_c =$ 切削速度
Cutting speed

$$v_c = \frac{d_{eff} \cdot \pi \cdot n}{1000} \quad [m/min]$$

$f_z =$ 进给/齿
Feed/tooth

$$f_z = \frac{v_f}{Z \cdot n} \quad [mm]$$

$v_f =$ 进给率
Feed rate

$$v_f = f_z \cdot Z \cdot n \quad [mm/min]$$

$Q =$ 材料去除率
Material removal rate

$$Q = \frac{a_e \cdot a_p \cdot v_f}{1000} \quad [cm^3/min]$$

计算有效切削直径deff以得到正确的RPM和切削进给。
使用以下的值和公式计算有效直径：
a_p = 切深
Ds = 刀具直径
K_D = 修正值表
$d_{eff} = K_D + (Ds - 12)$

The effective cutting diameter d_{eff} must be calculated to obtain the correct RPM and the cutting feed.
The effective cutting diameter is calculated using the following values and formula.
a_p = depth of cut
Ds = cutter diameter
K_D = from Correction value chart
$d_{eff} = K_D + (Ds - 12)$

修正数值
Correction value

a_p [mm]	K_D [mm]
0.1	5.3
0.2	6.5
0.3	7.4
0.4	8.1
0.5	8.8
0.6	9.4
0.7	10.0
0.8	10.5
0.9	11.0
1.0	12.0

L

DAHM37

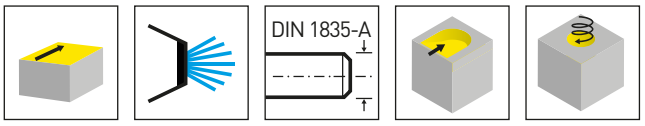

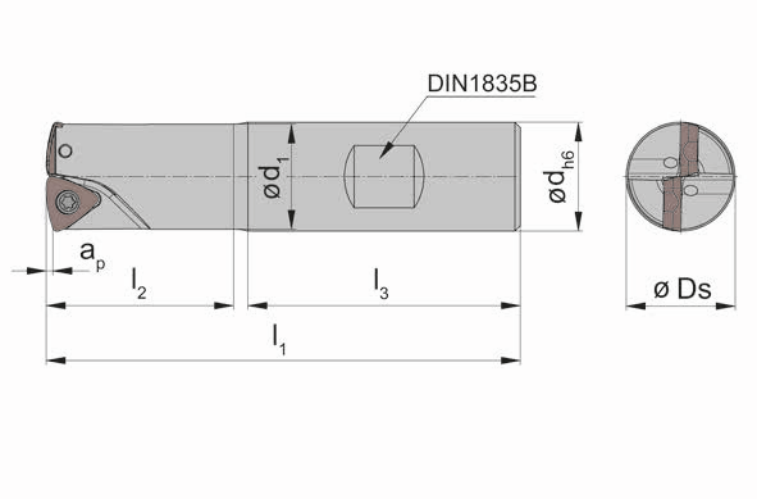

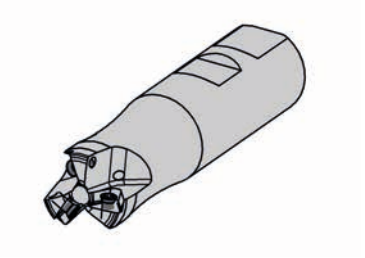

产品型号 Part number	Z	Ds	d	l_1	l_2	d_1	l_3	a_p	HWS
DAHM.37.020.D204.02B	2	20	20	87	34	19	50	1.2	DAH37
DAHM.37.025.D255.03B	3	25	25	101	41	24	56	1.2	DAH37
DAHM.37.032.D326.04B	4	32	32	111	47	31	60	1.2	DAH37

L

配件
Spare Parts

杆式铣刀 End Mill	锁紧螺钉 Clamping Screw	TORX PLUS®扳手 TORX PLUS® Wrench
DAHM...	**030.3070.T10P**	**T10PL**

螺纹锁紧铣刀
Screw-in cutter

DAHM37

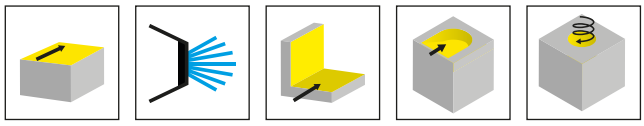

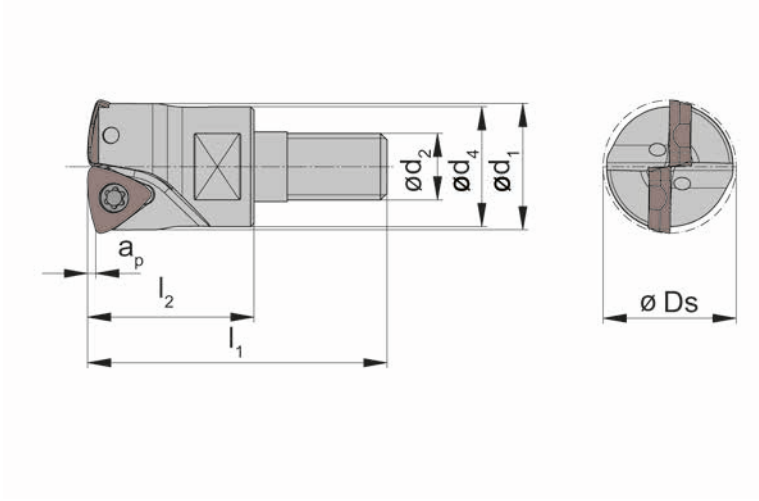

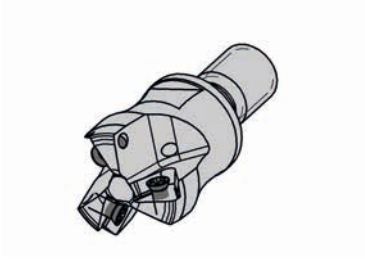

产品型号 Part number	Z	Ds	l_1	l_2	d_1	a_p	d_2	d_4	SW	HWS	HMS
DAHM.37.020.M104.02	2	20	45	25	19	1.2	M10	18	15	DAH37	10001
DAHM.37.025.M125.03	3	25	52	30	24	1.2	M12	21	17	DAH37	12001
DAHM.37.032.M166.04	4	32	58	35	31	1.2	M16	29	24	DAH37	16001
DAHM.37.040.M166.05	5	40	58	35	39	1.2	M16	29	24	DAH37	16001

配件
Spare Parts

螺纹锁紧铣刀 Screw-in cutter	锁紧螺钉 Clamping Screw	TORX PLUS®扳手 TORX PLUS® Wrench
DAHM...	**030.3070.T10P**	**T10PL**

L

芯轴刀柄式铣刀
Arbour Mounted Cutter

DAHM37

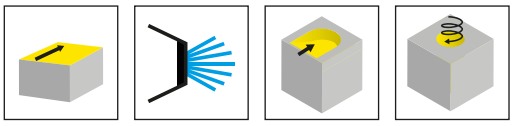

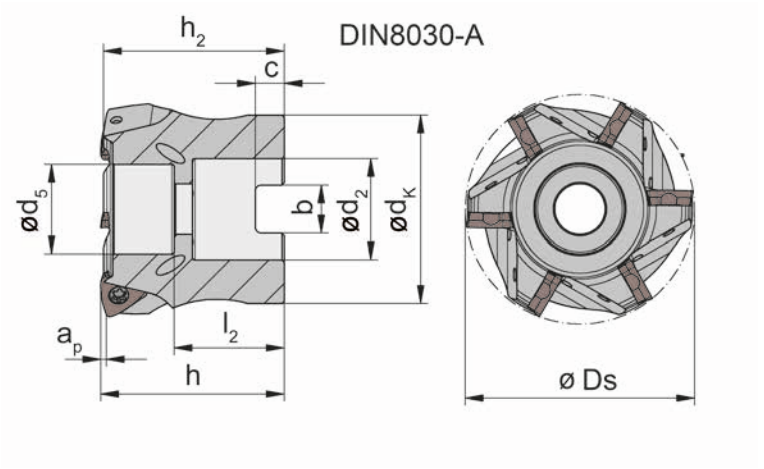

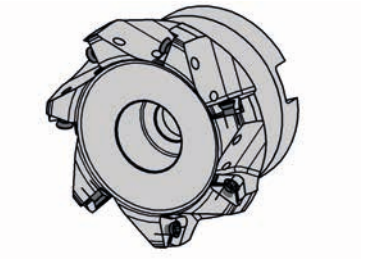

图示=右手型
Picture = right hand cutting version

产品型号 Part number	Z	Ds	a_p	h_2	h	d_5	d_K	l_2	b	C	d_2	HWS
DAHM.37.040.A1635.05	5	40	1.2	34.4	35	16	33	22	8.4	5.6	16	DAH37
DAHM.37.050.A2235.06	6	50	1.2	39.4	40	19.5	41	24	10.4	6.3	22	DAH37
DAHM.37.063.A2240.07	7	63	1.2	39.4	40	19.5	49	24	10.4	6.3	22	DAH37
DAHM.37.063.A2740.07	7	63	1.2	44.4	45	21.5	49	27	12.4	7	27	DAH37
DAHM.37.080.A3245.08	8	80	1.2	54.4	55	29.5	59	33	12.4	8	32	DAH37

L

配件
Spare Parts

芯轴刀柄式铣刀 Arbour Mounted Cutter	锁紧螺钉 Clamping Screw	TORX PLUS®扳手 TORX PLUS® Wrench
DAHM...	**030.3070.T10P**	**T10PL**

可转位刀片
Indexable insert

DAH37

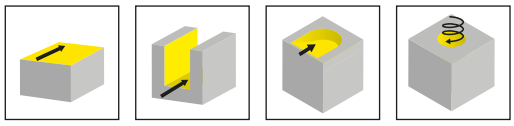

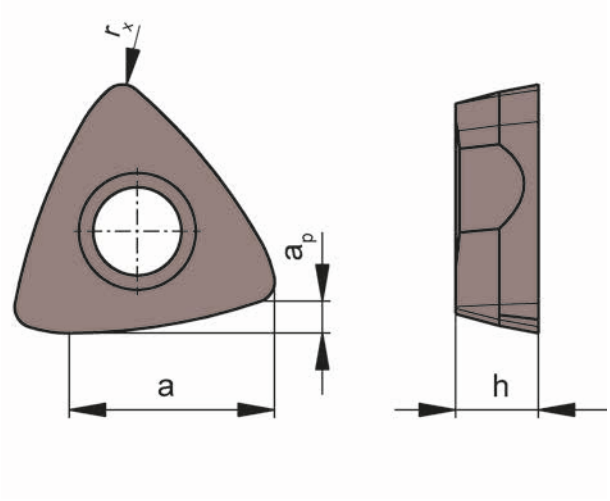

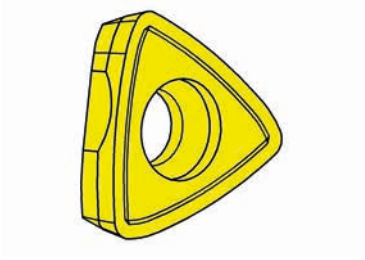

硬质合金牌号
Carbide grades

▲ 库存
on stock

Δ 4周
4 weeks

产品型号 Part number	a_p	a	h	r_x	HIS		SA4B	SC6A
DAH.37.022.N.08	1.2	7.9	3.18	0.8	DAH37		▲	▲
						P	●	●
						M	●	●
						K	●	●
						N	●	●
						S	-	-
						H	-	-

中立（零度）前角槽型
neutral geometry

L

可转位刀片
Indexable insert

DAH37

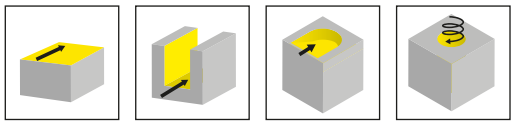

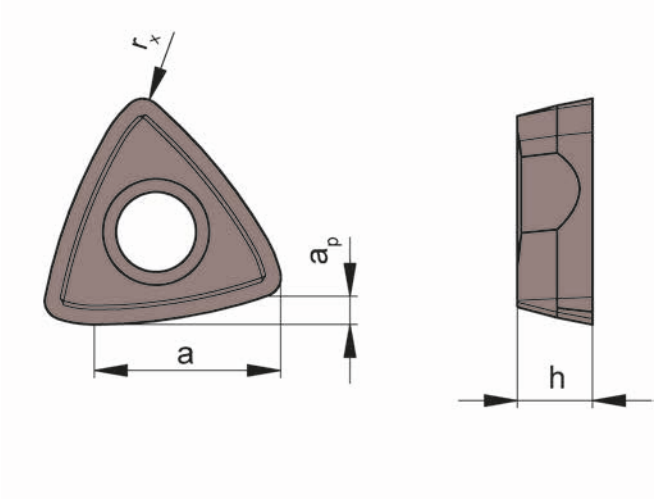

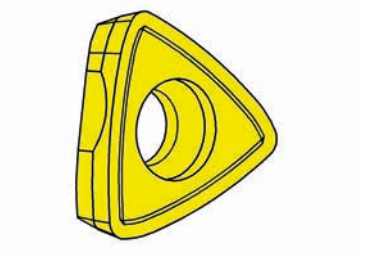

硬质合金牌号
Carbide grades

▲ 库存
on stock

Δ 4周
4 weeks

产品型号 Part number	a_p	a	h	r_x	HIS		SA4B
DAH.37.022.S.08	1.2	7.9	3.18	0.8	DAH37		▲
						P	●
						M	●
						K	●
						N	●
						S	-
						H	-

正前角槽型
positive geometry

L

进给率 DAH37
Feed Rate

ISO	进给/齿 f_z (mm) Feed/tooth f_z (mm)
P	0.6 - 2.2
M	0.6 - 2.0
K	0.7 - 2.0
N	1.0 - 2.8
S	0.6 - 1.8

切削速度可在本样本的第N章中找到。
Cutting speeds can be found in chapter N in this catalogue.

切入角
Plunge angle

Ø (mm)	切入角 (°) Plunge angle (°)
20	5.0
25	4.0
32	1.0
40	0.5
50	0.5
63	0.4
80	0.4

编程半径和偏差
Programming radius and difference

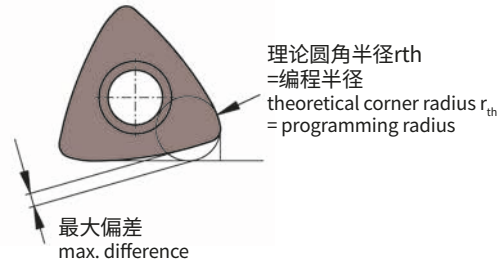

r_{th} (mm)	最大偏差 (mm) max. difference (mm)
2	0.83

L

计算公式-DAH37系列
Formulas System DAH37

$Z =$ 齿数
Number of teeth

d_{eff} =有效切削刃Ø
effective cutting edge Ø

$n =$ 转速
Revolutions

$$n = \frac{v_c \cdot 1000}{d_{eff} \cdot \pi} \quad [1/min]$$

$v_c =$ 切削速度
Cutting speed

$$v_c = \frac{d_{eff} \cdot \pi \cdot n}{1000} \quad [m/min]$$

$f_z =$ 进给/齿
Feed/tooth

$$f_z = \frac{v_f}{Z \cdot n} \quad [mm]$$

$v_f =$ 进给率
Feed rate

$$v_f = f_z \cdot Z \cdot n \quad [mm/min]$$

$Q =$ 材料去除率
Material removal rate

$$Q = \frac{a_e \cdot a_p \cdot v_f}{1000} \quad [cm^3/min]$$

计算有效切削直径deff以得到正确的RPM和切削进给。
使用以下的值和公式计算有效直径：
a_p = 切深
Ds = 刀具直径
K_D = 修正值表
$d_{eff} = K_D + (Ds - 20)$

The effective cutting diameter d_{eff} must be calculated to obtain the correct RPM and the cutting feed.
The effective cutting diameter is calculated using the following values and formula.
a_p = depth of cut
Ds = cutter diameter
K_D = from Correction value chart
$d_{eff} = K_D + (Ds - 20)$

修正数值
Correction value

a_p [mm]	K_D [mm]
0.1	9.71
0.2	11.47
0.3	12.81
0.4	13.93
0.5	14.92
0.6	15.82
0.7	16.63
0.8	17.39
0.9	18.10
1.0	18.77
1.1	19.40
1.2	20.00

L

DAHM82

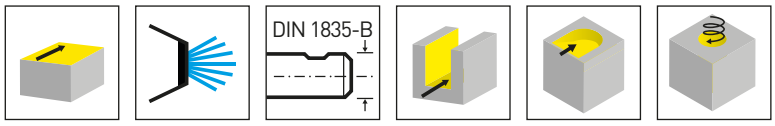

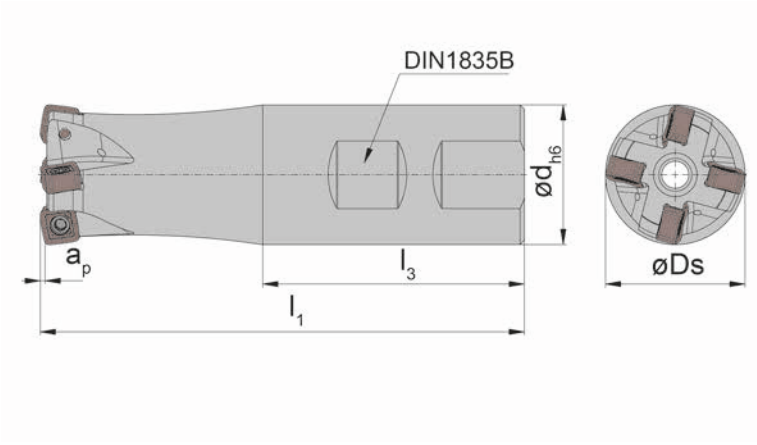

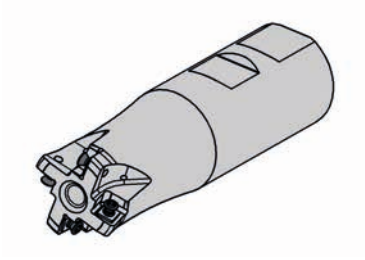

图示=右手型
Picture = right hand cutting version

产品型号 Part number	Z	Ds	d	l_1	l_3	a_p	n_{max}	HWS
DAHM.82.020.D204.02B	2	20	20	87	50	1	21000	DAH82
DAHM.82.025.D255.03B	3	25	25	101	56	1	18500	DAH82
DAHM.82.032.D326.04B	4	32	32	111	60	1	16500	DAH82
DAHM.82.035.D326.04B	4	35	32	111	60	1	15500	DAH82
DAHM.82.040.D326.05B	5	40	32	111	60	1	14500	DAH82

配件
Spare Parts

杆式铣刀 End Mill	锁紧螺钉 Clamping Screw	TORX PLUS®扳手 TORX PLUS® Wrench
DAHM...	**030.3070.T10P**	**T10PL**

螺纹锁紧铣刀
Screw-in cutter

DAHM82

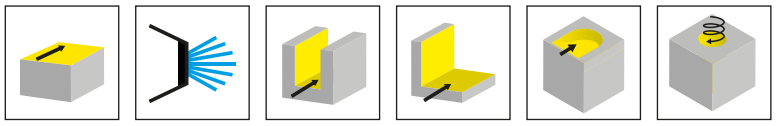

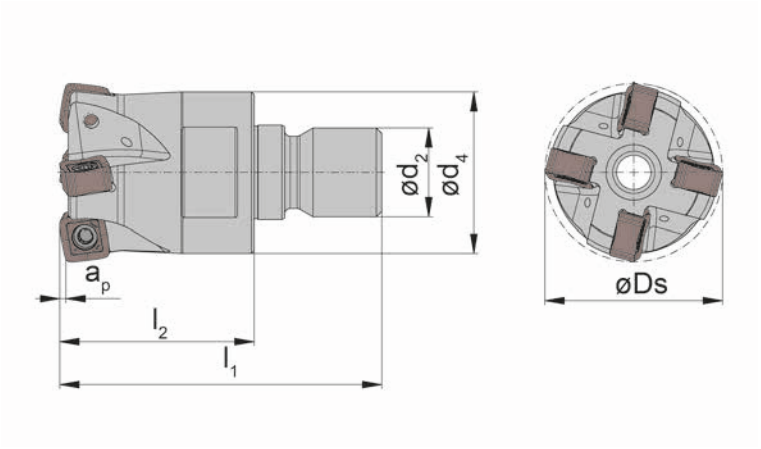

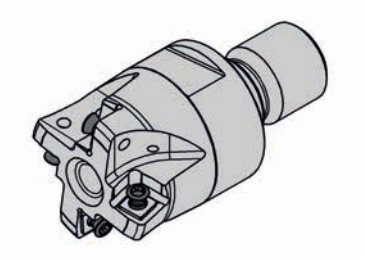

图示=右手型
Picture = right hand cutting version

产品型号 Part number	Z	Ds	l_1	l_2	d_4	a_p	d_2	SW	n_{max}	HWS	HMS
DAHM.82.020.M104.02	2	20	45	25	18	1	M10	15	21000	DAH82	10001
DAHM.82.025.M125.03	3	25	52	30	21	1	M12	17	18500	DAH82	12001
DAHM.82.032.M166.04	4	32	58	35	29	1	M16	24	16500	DAH82	16001
DAHM.82.035.M166.04	4	35	58	35	29	1	M16	24	15500	DAH82	16001
DAHM.82.040.M166.05	5	40	58	35	29	1	M16	24	14500	DAH82	16001

L

配件
Spare Parts

螺纹锁紧铣刀 Screw-in cutter	锁紧螺钉 Clamping Screw	TORX PLUS®扳手 TORX PLUS® Wrench
DAHM...	**030.3070.T10P**	**T10PL**

芯轴刀柄式铣刀
Arbour Mounted Cutter

DAHM82

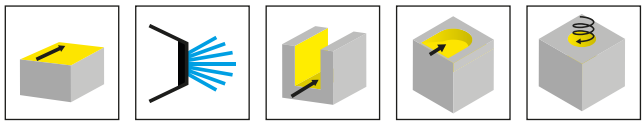

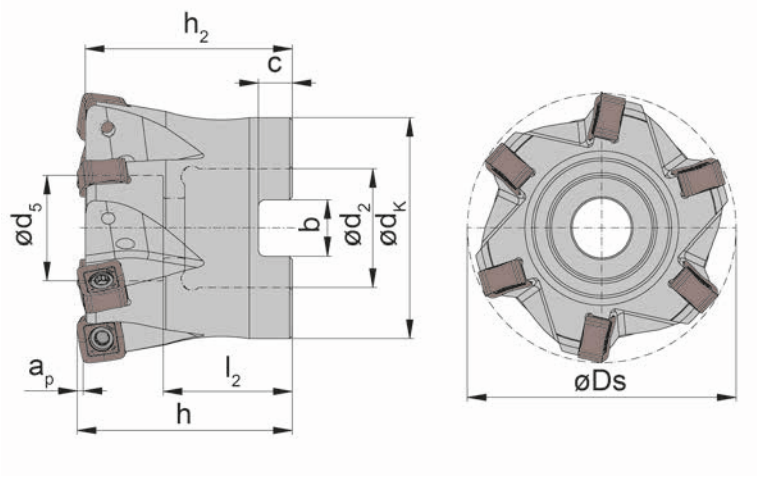

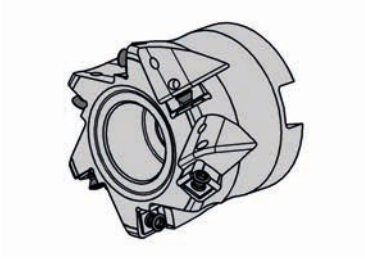

图示=右手型
Picture = right hand cutting version

产品型号 Part number	Z	Ds	a_p	h_2	h	d_5	d_K	l_2	b	C	d_2	n_{max}	HWS
DAHM.82.040.A1635.05	5	40	1	33.5	35	16	33	22	8.4	5.6	16	14500	DAH82
DAHM.82.042.A1635.05	5	42	1	33.5	35	16	33	22	8.4	5.6	16	14000	DAH82
DAHM.82.050.A2240.06	6	50	1	38.5	40	19.5	41	24	10.4	6.3	22	13000	DAH82
DAHM.82.052.A2240.06	6	52	1	38.5	40	19.5	41	24	10.4	6.3	22	13000	DAH82
DAHM.82.063.A2240.07	7	63	1	38.5	40	19.5	41	24	10.4	6.3	22	13000	DAH82

配件
Spare Parts

芯轴刀柄式铣刀 Arbour Mounted Cutter	锁紧螺钉 Clamping Screw	TORX PLUS®扳手 TORX PLUS® Wrench
DAHM...	**030.3070.T10P**	**T10PL**

L

DAH82

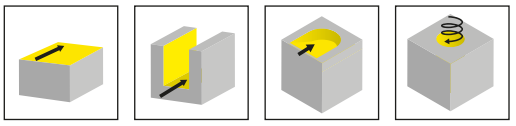

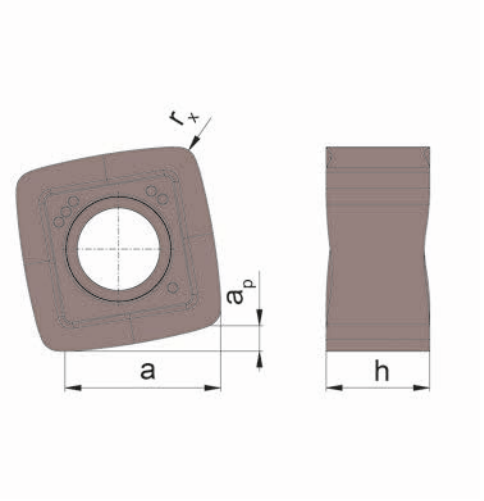

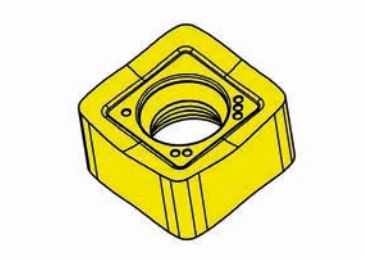

硬质合金牌号
Carbide grades

▲ 库存
on stock

Δ 4周
4 weeks

产品型号 Part number	a_p	a	h	r_x	HIS		IG6B	SA4B	SC6A
DAH.82.030.S.08	1	6.8	4.5	0.8	DAH82		▲	▲	▲
						P	●	●	●
						M	o	●	●
						K	o	●	●
						N	o	●	●
						S	o	-	-
						H	-	-	-

正前角槽型
positive geometry

L

芯轴刀柄式铣刀
Arbour Mounted Cutter

DAHM84

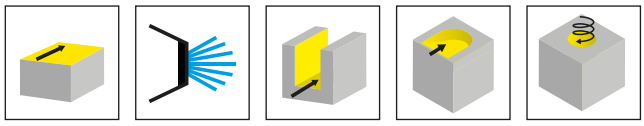

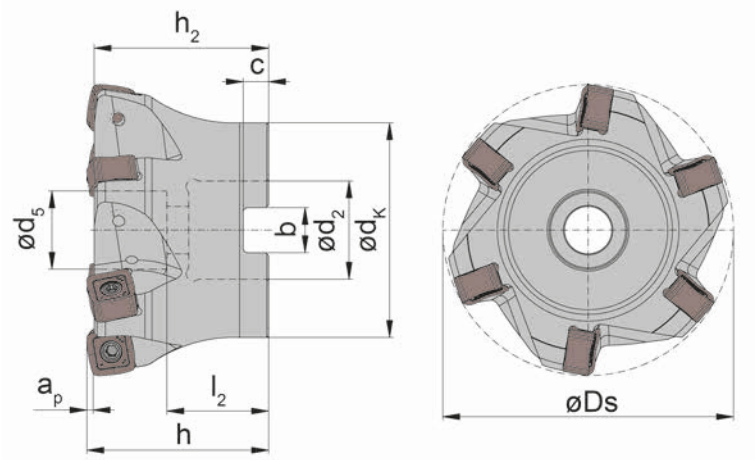

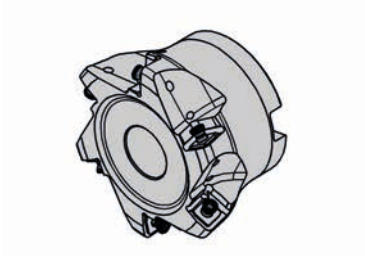

图示=右手型
Picture = right hand cutting version

产品型号 Part number	Z	Ds	a_p	h_2	h	d_5	d_K	l_2	b	C	d_2	n_{max}	HWS
DAHM.84.050.A2240.04	4	50	1.5	38	40	16.5	41	25	10.4	6.3	22	8000	DAH84
DAHM.84.052.A2240.04	4	52	1.5	38	40	16.5	41	25	10.4	6.3	22	7500	DAH84
DAHM.84.063.A2240.05	5	63	1.5	38	40	19.5	49	25	10.4	6.3	22	6500	DAH84
DAHM.84.066.A2240.05	5	66	1.5	38	40	19.5	49	25	10.4	6.3	22	6500	DAH84
DAHM.84.080.A2750.06	6	80	1.5	48	50	21.5	59	28	12.4	7	27	5500	DAH84
DAHM.84.085.A2750.06	6	85	1.5	48	50	21.5	59	28	12.4	7	27	5500	DAH84
DAHM.84.100.A3250.07	7	100	1.5	48	50	30	80	33	14.4	8	32	5000	DAH84
DAHM.84.125.A4063.08	8	125	1.5	61	63	56	89	35	16.4	9	40	4000	DAH84

配件
Spare Parts

芯轴刀柄式铣刀 Arbour Mounted Cutter	锁紧螺钉 Clamping Screw	TORX PLUS®扳手 TORX PLUS® Wrench	锁紧栓 Tightening Bolt
DAHM.84...	**030.0412.T15P**	**T15PQ**	
DAHM.84.125.A4063.08	**030.0412.T15P**	**T15PQ**	**20.30.6367**

L

DAH84

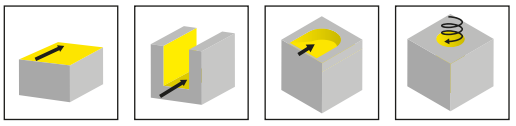

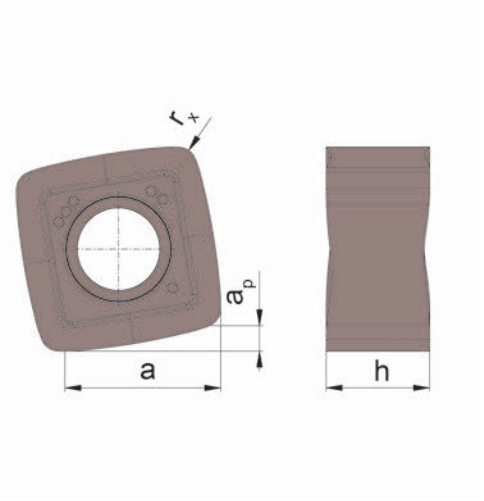

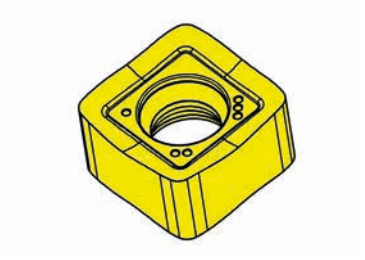

硬质合金牌号
Carbide grades

▲ 库存
on stock

Δ 4周
4 weeks

产品型号 Part number	a_p	a	h	r_x	HIS		IG6B	SA4B	SC6A
DAH.84.030.S.12	1.5	9.8	7	1.2	DAH84		▲	▲	▲
正前角槽型 positive geometry						P	●	●	●
						M	o	●	●
						K	o	●	●
						N	o	●	●
						S	o	-	-
						H	-	-	-

L

进给率 DAH82 / DAH84
Feed Rate

ISO	DAH82	DAH84
	进给/齿 f_z (mm) Feed/tooth f_z (mm)	进给/齿 f_z (mm) Feed/tooth f_z (mm)
P	0.6 - 2.2	0.8 - 2.2
M	0.6 - 2.0	0.6 - 2.2
K	0.7 - 2.0	0.7 - 2.2
N	1.0 - 2.8	1.5 - 3.0
S	0.6 - 1.8	0.7 - 2.0

切削速度可在本样本的第N章中找到。
Cutting speeds can be found in chapter N in this catalogue.

编程半径和偏差
Programming radius and difference

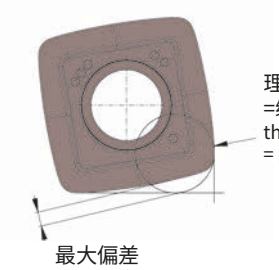

DAH82

r_{th}(mm)	最大偏差 (mm) max. difference (mm)
2	0.72

DAH84

r_{th}(mm)	最大偏差 (mm) max. difference (mm)
3.25	0.96

L

刀具中心轨迹的计算

D = 工件孔径
Ds = 切削直径
r_s = 切削半径
U_{FMB} = 刀具中心轨迹周长

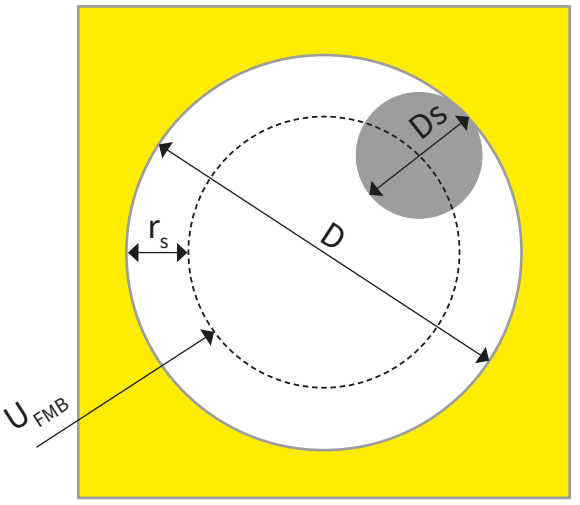

U_{FMB} = π x (工件孔径 - 切削直径)
→ U_{FMB} = π x (D - Ds)

或者

U_{FMB} = π x (工件孔径 - (2 x 切削半径))
→ U_{FMB} = π x (D - (2 x r_s))

采用刀具中心轨迹计算: 基底是直角三角形

α = 斜坡角
b = 每转加工深度（节距）
a = 刀具中心轨迹周长

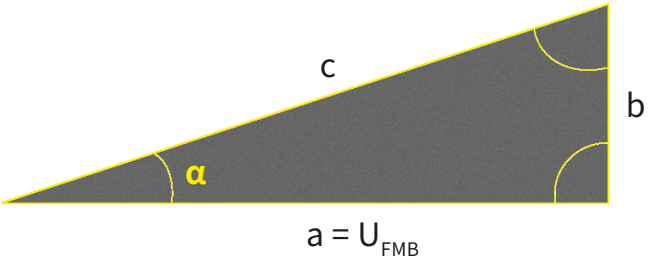

举例 缺少斜坡角 = ?

工件孔径 D = 98 mm
每转加工深度（节距） b = 0.8 mm
切削直径 Ds = 50 mm

$$\tan\alpha = \frac{\text{对边 b}}{\text{邻边 a}}$$

$$\tan\alpha = \frac{0.8\ \text{mm}}{150.8\ \text{mm}}$$

α = 0.30°

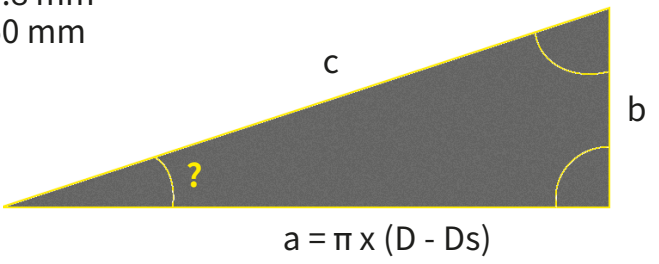

L

刀具中心轨迹-理论值

DAH82	
切削刃Ø [mm]	切入角 [°]
20	5
25	3.9
32	2.8
35	2.4
40	1.9
42	1.8
50	1.4

DAH84	
切削刃Ø [mm]	切入角 [°]
50	2.7
52	2.5
63	1.8
66	1.7
80	1.3
85	1.2
100	1.0
125	0.8

螺旋插铣的推荐DAH82: $a_{p\,max}$ = 1 mm

→ 每转进给量: $a_{p\,max}$ 的 50%作为初始值

→ 根据不同工况，最大可能达到$a_{p\,max}$ 的 80%

→ 0.5 mm 至 0.8 mm 每转进给量

螺旋插铣的推荐DAH84: $a_{p\,max}$ = 1.5 mm

→ 每转进给量: ap max 的 67%作为初始值

→ 根据不同工况，最大可能达到ap max 的 80%

→ 1.0 mm 至 1.2 mm 每 转进给量

L

可铣平低面的孔径计算 DAH82

D_{min} = (Ds - a) x 2

D_{min} = (50 mm - 6.8 mm) x 2

D_{min} = 86.4 mm

意味着:

切削直径 50 mm，可实现最大直径 86.4 mm 平底孔径。

D_{max} = (Ds - r_x) x 2

D_{max} = (50 mm - 0.8 mm) x 2

D_{max} = 98.4 mm

意味着:

切削直径 50 mm， 可实现最大直径 98.4mm非平底孔径。中间部位仍有材料残留。

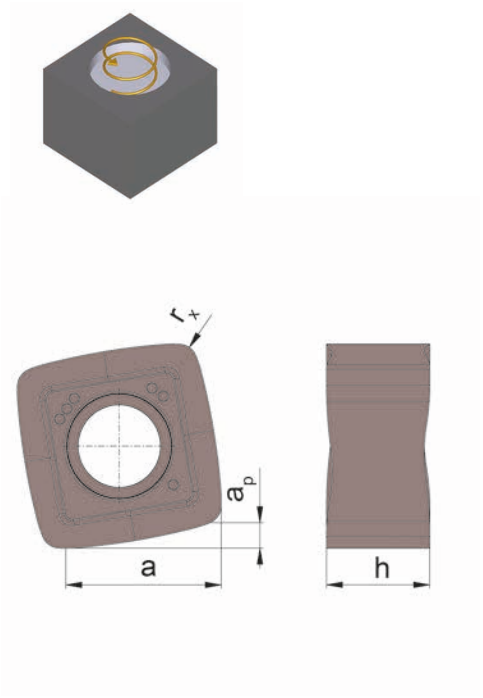

r_x = 0.8 mm

a = 6.8 mm

L

可铣平低面的孔径计算 DAH84

D_{min} = (Ds - a) x 2

D_{min} = (50 mm - 9.8 mm) x 2

D_{min} = 80.4 mm

意味着:

切削直径 50 mm，可实现最大直径 80.4 mm 平底孔径。

D_{max} = (Ds - r_x) x 2

D_{max} = (50 mm - 1.2 mm) x 2

D_{max} = 97.6 mm

意味着:

切削直径 50 mm， 可实现最大直径 97.6mm非平底孔径。中间部位仍有材料残留。

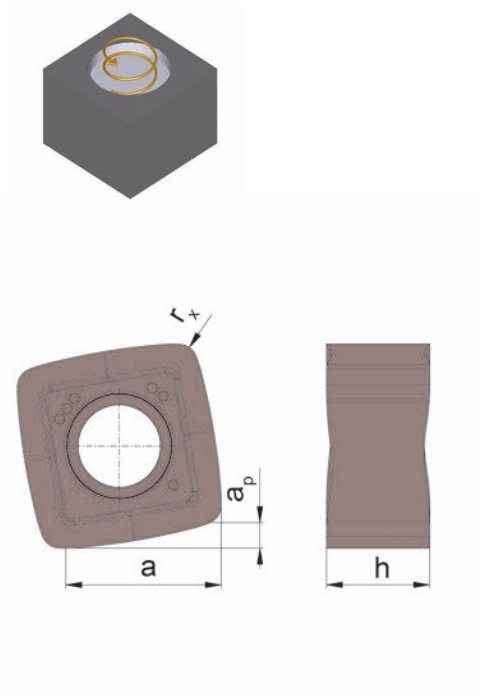

r_x = 1.2 mm

a = 9.8 mm

L

Calculation of cutter centre path

D = Bore diameter of workpiece
Ds = Cutting diameter
r_s = Cutting radius
U_{FMB} = Circumference of cutter centre path

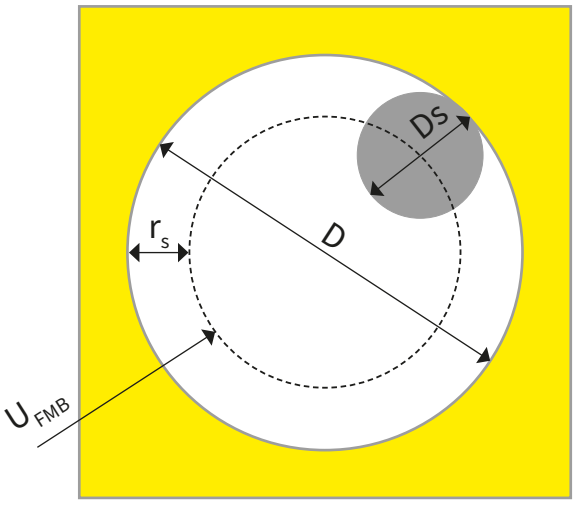

U_{FMB} = Ü x (Bore diameter of workpiece - Cutting diameter)

→ $U_{FMB} = \pi \times (D - Ds)$

or

U_{FMB} = Ü x (Bore diameter of workpiece - (2 x Cutting radius))

→ $U_{FMB} = \pi \times (D - (2 \times r_s))$

Calculation using cutter centre path: The basis is the right-angled triangle

α = Ramp angle
b = Depth of cut per rotation (Pitch)
a = Circumference of cutter centre path

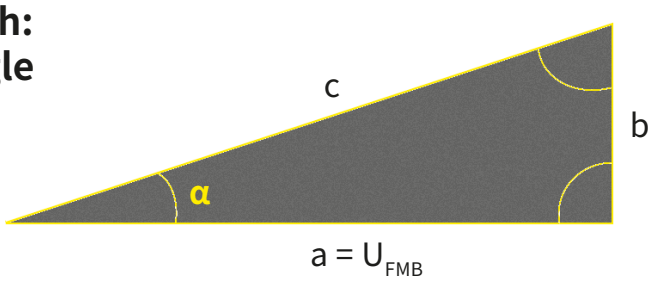

Example of missing ramp angle = ?

Bore diameter of workpiece	D	= 98 mm
Depth of cut per rotation	b	= 0.8 mm
Cutting diameter	Ds	= 50 mm

$$\tan\alpha = \frac{\text{Opposite side b}}{\text{Adjacent side a}}$$

$$\tan\alpha = \frac{0.8\ \text{mm}}{150.8\ \text{mm}}$$

$\alpha = 0.30°$

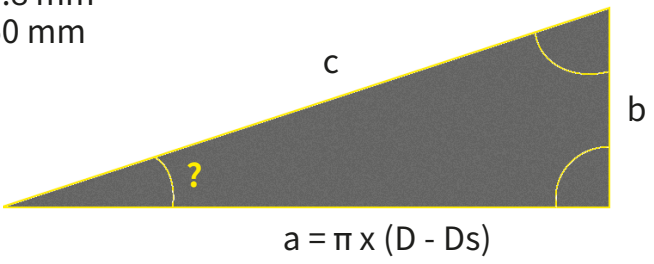

L

Cutter centre path - Theoretical values

DAH82	
Cutting Ø [mm]	Plunge angle [°]
20	5
25	3.9
32	2.8
35	2.4
40	1.9
42	1.8
50	1.4

DAH84	
Cutting Ø [mm]	Plunge angle [°]
50	2.7
52	2.5
63	1.8
66	1.7
80	1.3
85	1.2
100	1.0
125	0.8

Recommendation for helical plunging DAH82:

$a_{p\,max}$ = 1 mm

→ Feed per revolution: 50% of $a_{p\,max}$ as starting value

→ Depending on conditions, up to 80 % of the $a_{p\,max}$ possible

→ 0.5 mm up to 0.8 mm feed per revolution

Recommendation for helical plunging DAH84:

$a_{p\,max}$ = 1.5 mm

→ Feed per revolution: 67% of $a_{p\,max}$ as starting value

→ Depending on conditions, up to 80 % of the $a_{p\,max}$ possible

→ 1.0 mm up to 1.2 mm feed per revolution

Calculation of bore diameter with flat base DAH82

D_{min} = (Ds - a) x 2

D_{min} = (50 mm - 6.8 mm) x 2

D_{min} = 86.4 mm

Meaning:

With a cutting diameter 50 mm, a bore diameter of 86.4 mm **with** a flat base can be achieved.

D_{max} = (Ds - r_x) x 2

D_{max} = (50 mm - 0.8 mm) x 2

D_{max} = 98.4 mm

Meaning:

With a cutting diameter 50 mm, a diameter of 98.4 mm **without** a flat base can be achieved. Material remains in the centre.

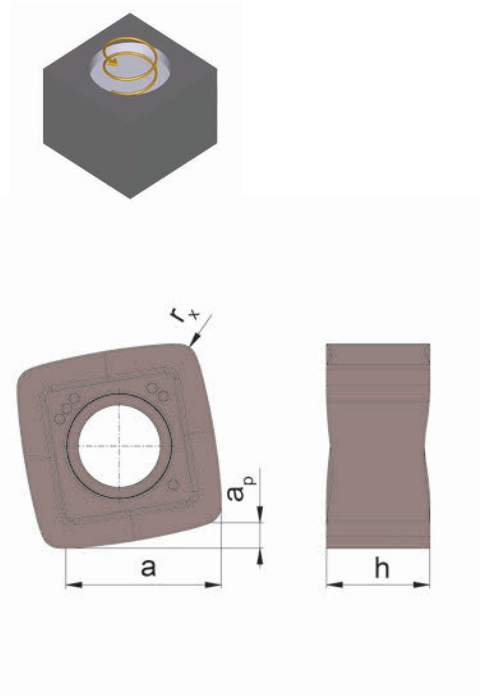

r_x = 0.8 mm

a = 6.8 mm

L

Calculation of bore diameter with flat base DAH84

D_{min} = (Ds - a) x 2

D_{min} = (50 mm - 9.8 mm) x 2

D_{min} = 80.4 mm

Meaning:

With a cutting diameter 50 mm, of a bore diameter of 80.4 mm **with** a flat base can be achieved.

D_{max} = (Ds - r_x) x 2

D_{max} = (50 mm - 1.2 mm) x 2

D_{max} = 97.6 mm

Meaning:

With a cutting diameter 50 mm, a diameter of 97.6 mm **without** a flat base can be achieved. Material remains in the centre.

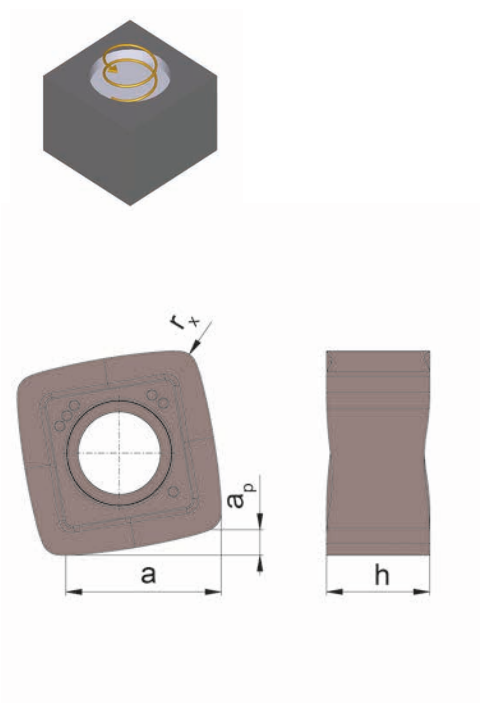

r_x = 1.2 mm

a = 9.8 mm

L

DAH8 - 修正系数 面铣削
DAH8 - Correction value face milling

修正因子 - 为什么?
Correction factors - why?

- 使用快进给铣刀时，有效切削直径与规定值不一致。
- 修正系数取决于切削深度a_p。
- 应用于平面铣削
- 平面铣削有效Ds的计算:**有效Ds = Ds - K**

- When using a high feed milling cutter, the effective cutting diameter is not identical with the specified value.
- The correction factors are dependent on the cutting depth a_p.
- This applies to face milling.
- Calculation for Ds effective for face milling: **Ds e ective = Ds - K**

DAH82	
切深 Depth of cut a_p [mm]	修正数值 Correction factor K [mm]
0.1	10.9
0.2	9.5
0.3	8.3
0.4	7.0
0.5	5.9
0.6	4.8
0.7	3.9
0.8	3.0
0.9	2.2
1.0	1.6

DAH84	
切深 Depth of cut a_p [mm]	修正数值 Correction factor K [mm]
0.1	16.3
0.2	14.6
0.3	13.0
0.4	11.7
0.5	10.4
0.6	9.3
0.7	8.2
0.8	7.3
0.9	6.4
1.0	5.6
1.1	4.9
1.2	4.1
1.3	3.5
1.4	2.8
1.5	2.3

系列/System	页/Page
M406	**524**
M409	**534**
M610	**558**

杆式铣刀
End Mill
M406

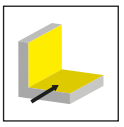

页/Page
526-528

螺纹锁紧铣刀
Screw-in cutter
M406

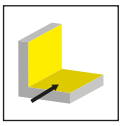

页/Page
529

芯轴刀柄式铣刀
Arbour Mounted Cutter
M406

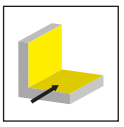

页/Page
530

可转位刀片
Indexable insert
406

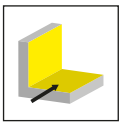

页/Page
531

刀片
Insert
406

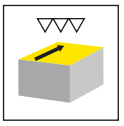

页/Page
532

M406

立装铣削系列 406

- 90° 技术信息
- 90° 螺纹锁紧铣刀
- 芯轴刀柄式铣刀

Tangential milling with system 406

- 90° End Mill
- 90° Screw-in Cutter
- Arbour Mounted Cutter

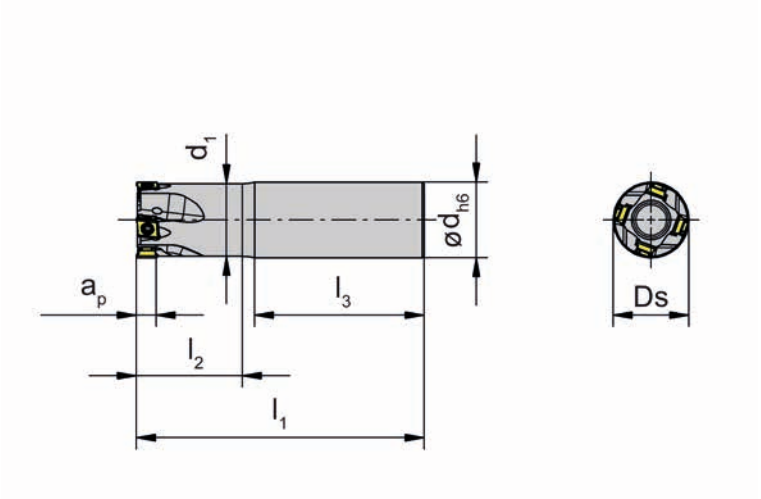

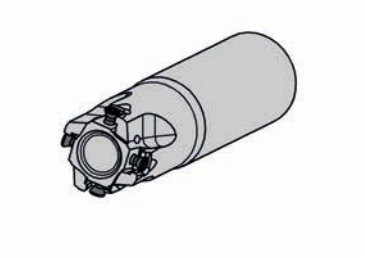

图示=右手型
Picture = right hand cutting version

产品型号 Part number	Z	Ds	d	l_1	l_2	d_1	l_3	a_p	n_{max}	HWS
M406.016.D16.3.02A	2	16	16	75	25	15	48	6.3	23700	40600R
M406.020.D20.4.03A	3	20	20	85	33	19	50	6.3	21200	40600R
M406.025.D25.5.04A	4	25	25	95	37	24	56	6.3	19000	40600R
M406.032.D32.6.05A	5	32	32	111	47	31	60	6.3	16700	40600R
M406.040.D32.6.06A	6	40	32	111	49	39	60	6.3	15000	40600R

配件
Spare Parts

杆式铣刀 End Mill	**锁紧螺钉** Clamping Screw	**TORX PLUS®扳手** TORX PLUS® Wrench
M406...02A -...03A	**030.2669.T8P**	**T8PL**
M406...04A -...06A	**030.2608.T8P**	**T8PL**

杆式铣刀
End Mill

M406

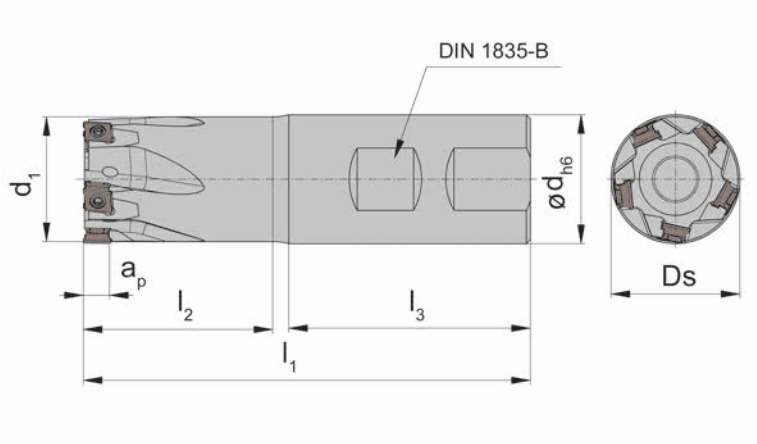

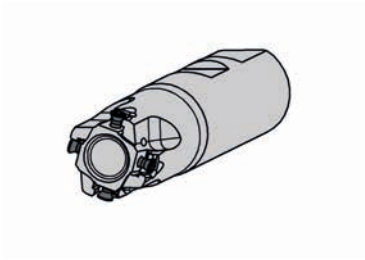

图示=右手型
Picture = right hand cutting version

产品型号 Part number	Z	Ds	d	l_1	l_2	d_1	l_3	a_p	n_{max}	HWS
M406.016.D16.3.02B	2	16	16	75	25	15	48	6.3	23700	40600R
M406.020.D20.4.03B	3	20	20	85	33	19	50	6.3	21200	40600R
M406.025.D25.5.04B	4	25	25	95	37	24	56	6.3	19000	40600R
M406.032.D32.6.05B	5	32	32	111	47	31	60	6.3	16700	40600R

配件
Spare Parts

杆式铣刀 End Mill	锁紧螺钉 Clamping Screw	TORX PLUS®扳手 TORX PLUS® Wrench
M406...02B -...03B	**030.2669.T8P**	**T8PL**
M406...04B -...06B	**030.2608.T8P**	**T8PL**

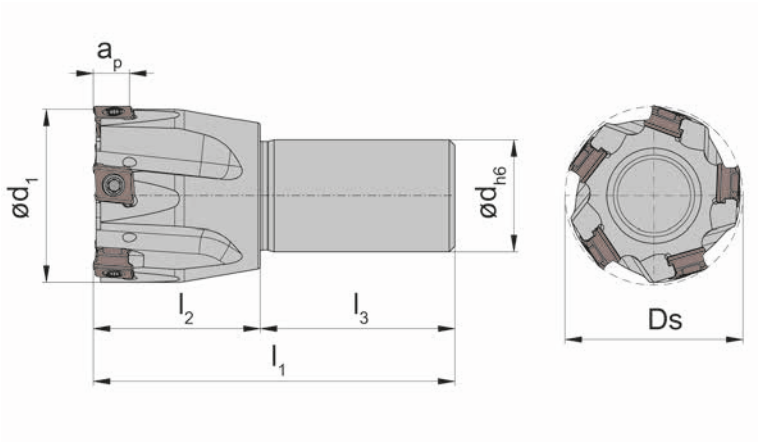

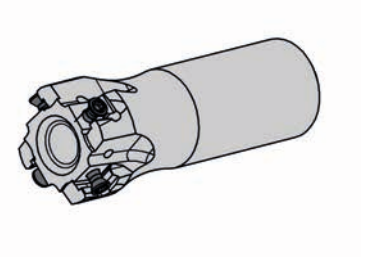

图示=右手型
Picture = right hand cutting version

产品型号 Part number	Z	Ds	d	l_1	l_2	d_1	l_3	a_p	n_{max}	HWS
M406.016.D12.1.02A	2	16	12	55	20	15	35	6.3	23700	40600R
M406.020.D16.1.03A	3	20	16	55	20	19	35	6.3	21200	40600R
M406.025.D16.2.04A	4	25	16	65	30	24	35	6.3	19000	40600R
M406.025.D20.2.04A	4	25	20	65	30	24	35	6.3	19000	40600R
M406.032.D16.2.05A	5	32	16	65	30	31	35	6.3	16700	40600R
M406.032.D20.2.05A	5	32	20	65	30	31	35	6.3	16700	40600R
M406.040.D16.2.06A	6	40	16	65	30	39	35	6.3	15000	40600R
M406.040.D20.2.06A	6	40	20	65	30	39	35	6.3	15000	40600R

配件
Spare Parts

杆式铣刀 End Mill	锁紧螺钉 Clamping Screw	TORX PLUS®扳手 TORX PLUS® Wrench
M406...02A -...03A	**030.2669.T8P**	**T8PL**
M406...04A -...06A	**030.2608.T8P**	**T8PL**

螺纹锁紧铣刀
Screw-in cutter

M406

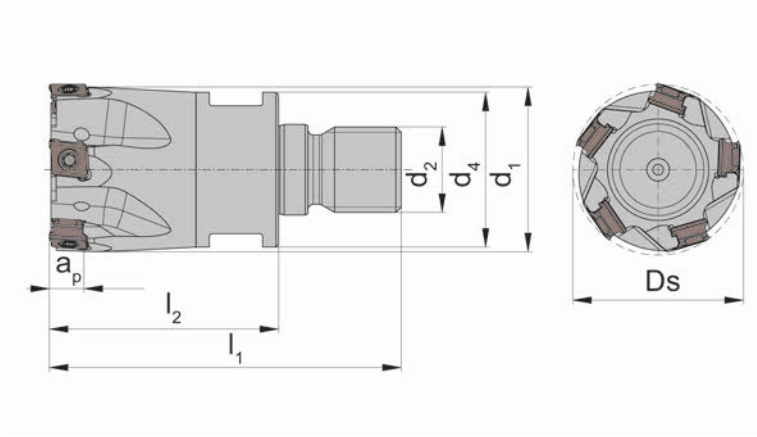

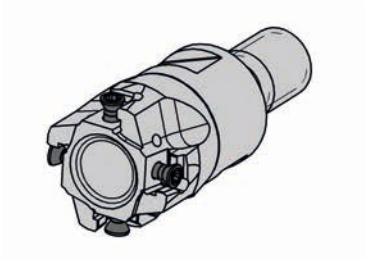

图示=右手型
Picture = right hand cutting version

产品型号 Part number	Z	Ds	l_1	l_2	d_1	a_p	d_2	d_4	SW	n_{max}	HWS	HMS
M406.016.M08.3.02	2	16	41	23	15	6.3	M8	13	10	23700	40600R	08001
M406.020.M10.4.03	3	20	50	30	19	6.3	M10	18	15	21200	40600R	10001
M406.025.M12.5.04	4	25	57	35	24	6.3	M12	21	17	19000	40600R	12001
M406.032.M16.6.05	5	32	66	43	31	6.3	M16	29	24	16700	40600R	16001
M406.040.M16.6.06	6	40	66	43	39	6.3	M16	29	24	15000	40600R	16001

配件
Spare Parts

螺纹锁紧铣刀 Screw-in cutter	锁紧螺钉 Clamping Screw	TORX PLUS®扳手 TORX PLUS® Wrench
M406...02 -...03	**030.2669.T8P**	**T8PL**
M406...04 -...06	**030.2608.T8P**	**T8PL**

芯轴刀柄式铣刀
Arbour Mounted Cutter

M406

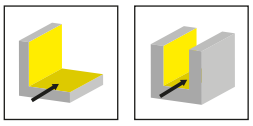

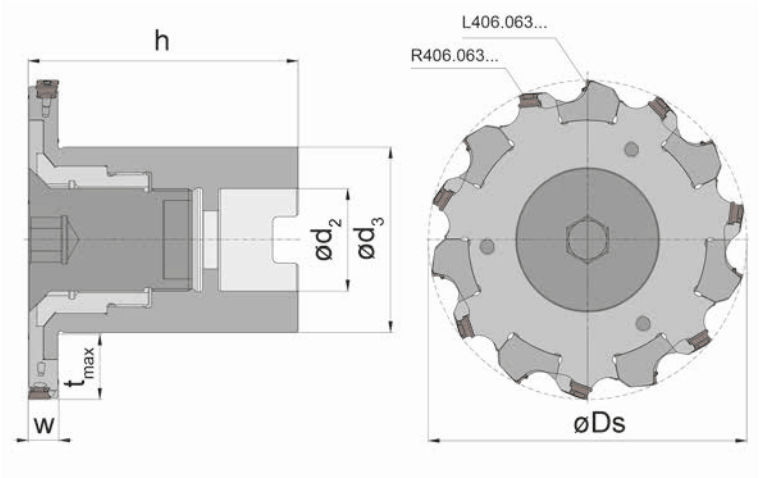

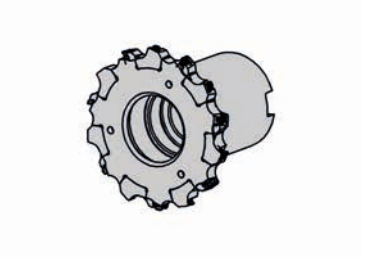

产品型号 Part number	Z	Z_{eff}	Ds	t_{max}	h_{min}	h_{max}	d_3	d_2	w_{min}	w_{max}	右手型刀片 right hand insert	左手型刀片 left hand insert	HWS
M406.0100.A32.ES.96	14	7	100	20	84.8	88.1	58	32	9.6	12.9	7x R406.063...	7x L406.063...	40600R • 40600L

芯轴刀柄式铣刀可调节！
Arbour mounted cutter is adjustable!

配件
Spare Parts

芯轴刀柄式铣刀 Arbour Mounted Cutter	螺钉 Screw	锁紧螺钉 Clamping Screw	TORX PLUS®扳手 TORX PLUS® Wrench	Adjustment Adapter
M406.0100.A32.ES.96	**C406.0100.A32.ES.96**	**030.2608.T8P**	**T8PL**	**A406.0100.A32.ES.96**

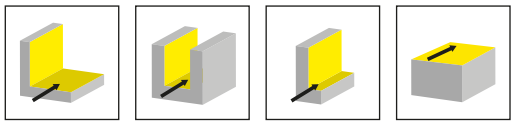

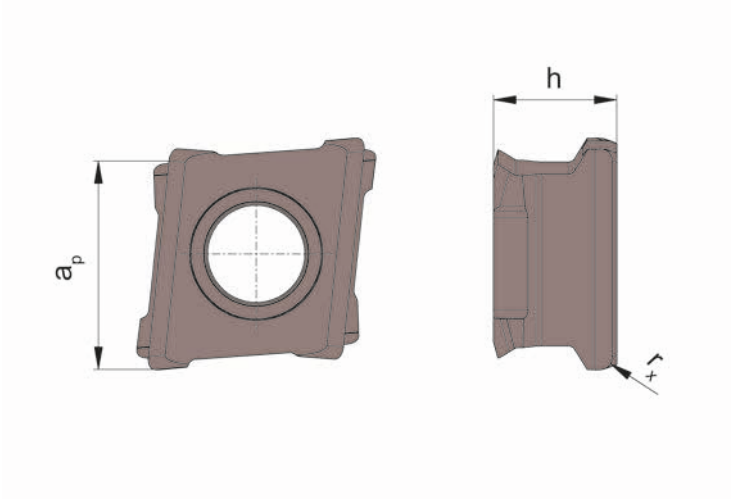

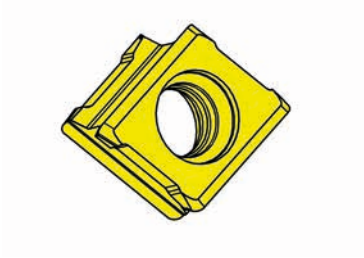

硬质合金牌号
Carbide grades

▲ 库存
on stock

Δ 4周
4 weeks

产品型号 Part number	a_p	h	r_x	HIS		K10	AS46	AS4B	IG35	NE2B
R406.063.U.02	6.3	3.85	0.2	40600R			Δ	▲		
R406.063.U.04	6.3	3.85	0.4	40600R			▲	▲		
R406.063.U.08	6.3	3.85	0.8	40600R			▲	▲		
R406.063.W.02	6.3	3.85	0.2	40600R		▲			▲	▲
R406.063.W.04	6.3	3.85	0.4	40600R					▲	▲
R406.063.W.08	6.3	3.85	0.8	40600R					▲	▲
L406.063.U.02	6.3	3.85	0.2	40600L			Δ	▲		
L406.063.U.04	6.3	3.85	0.4	40600L			▲	▲		
L406.063.U.08	6.3	3.85	0.8	40600L			▲	▲		
L406.063.W.02	6.3	3.85	0.2	40600L		▲			▲	▲
L406.063.W.04	6.3	3.85	0.4	40600L					▲	▲
L406.063.W.08	6.3	3.85	0.8	40600L					▲	▲
					P	●	o	●	-	-
					M	o	o	●	●	-
					K	●	●	●	-	-
					N	●	o	o	-	●
					S	o	o	●	●	-
					H	-	-	-	-	-

4个切削刃刀片
with 4 usable cutting edges

精密磨削
precision ground

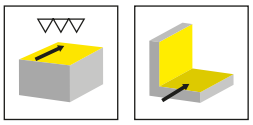

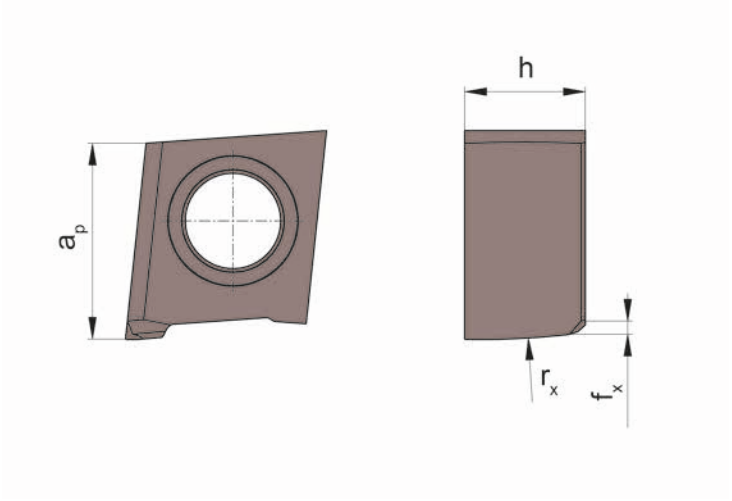

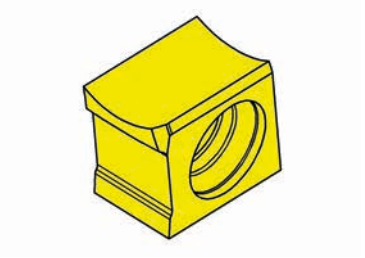

硬质合金牌号
Carbide grades

▲ 库存
on stock

Δ 4周
4 weeks

产品型号 Part number	a_p	h	r_x	fx	HIS		AS46	AS4B
R406.063.S.F4	6	3.85	100	0.4	40600R		▲	▲
						P	o	●
						M	o	●
						K	●	●
						N	o	o
						S	o	●
						H	-	-

修光刃几何角度，精密磨削
Wiper geometry, precision ground

杆式铣刀
End Mill
M409

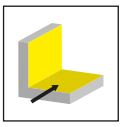

页/Page
536-538

螺纹锁紧铣刀
Screw-in cutter
M409

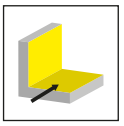

页/Page
539

方肩铣
Shoulder Mill
M409

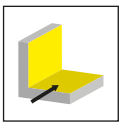

页/Page
540-541

面铣
Face Mill
M409

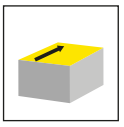

页/Page
542-545

玉米铣
Shell End Mill
M409

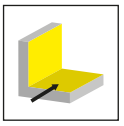

页/Page
546

盘铣刀
Disc Milling Cutter
M409

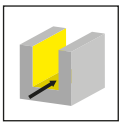

页/Page
547

芯轴刀柄式铣刀
Arbour Mounted Cutter
M409

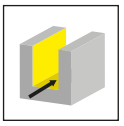

页/Page
548

可转位刀片
Indexable insert
409

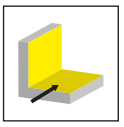

页/Page
549

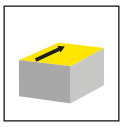

页/Page
550

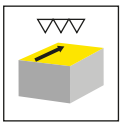

页/Page
551

安装说明
Mounting Instructions

页/Page
552-557

M409

立装铣削系列 409

- 90° 技术信息
- 90° 螺纹锁紧铣刀
- 方肩铣
- 面铣
- 玉米铣
- 盘铣刀
- 芯轴刀柄式铣刀

Tangential milling with system 409

- 90° End Mill
- 90° Screw-in cutter
- Shoulder Mill
- Face Mill
- Shell End Mill
- Disc Milling cutter
- Arbour Mounted Cutter

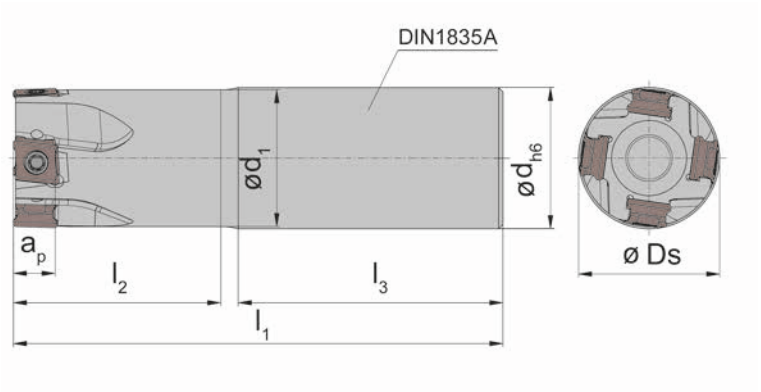

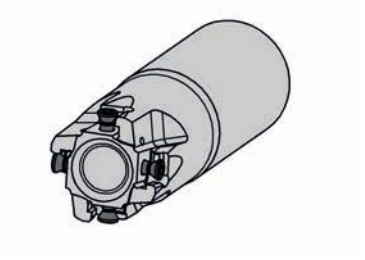

图示=右手型
Picture = right hand cutting version

产品型号 Part number	Z	Ds	d	l_1	l_2	d_1	l_3	a_p	形式 Form	n_{max}	HWS
M409.032.D32.6.04A	4	32	32	111	47	31	60	9.3	A	15600	40900R
M409.040.D32.6.05A	5	40	32	111	47	39	60	9.3	A	13900	40900R

密齿
narrow pitch

配件
Spare Parts

杆式铣刀 End Mill	锁紧螺钉 Clamping Screw	TORX PLUS®扳手 TORX PLUS® Wrench
M409...	**030.3511.T10P**	**T10PL**

M409

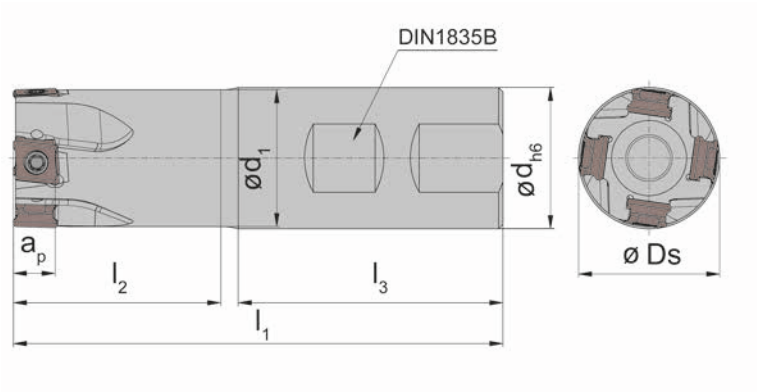

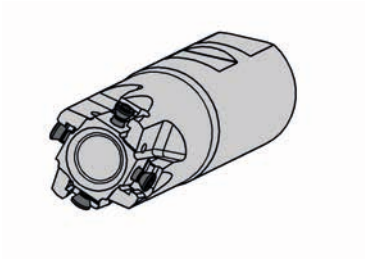

图示=右手型
Picture = right hand cutting version

产品型号 Part number	Z	Ds	d	l_1	l_2	d_1	l_3	a_p	形式 Form	n_{max}	HWS
M409.032.D32.6.04B	4	32	32	111	47	31	60	9.3	B	15600	40900R
M409.040.D32.6.05B	5	40	32	111	47	39	60	9.3	B	13900	40900R

密齿
narrow pitch

配件
Spare Parts

杆式铣刀 End Mill	锁紧螺钉 Clamping Screw	TORX PLUS®扳手 TORX PLUS® Wrench
M409...	**030.3511.T10P**	**T10PL**

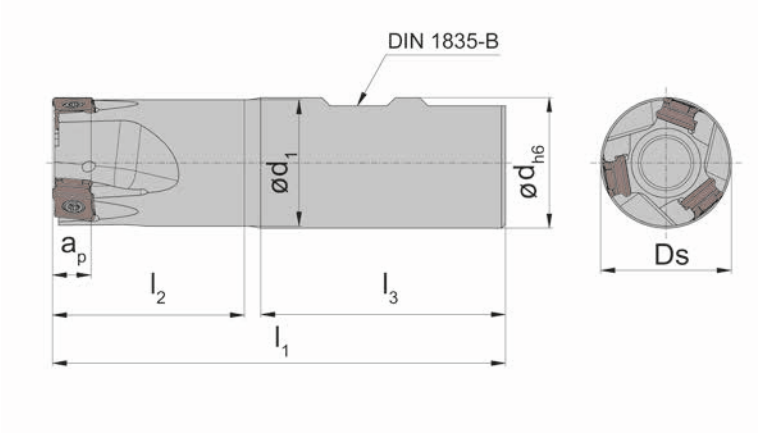

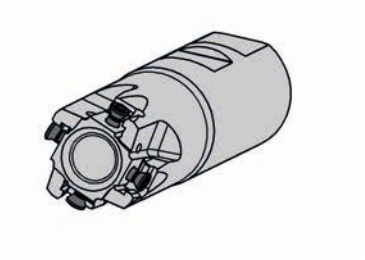

图示=右手型
Picture = right hand cutting version

产品型号 Part number	Z	Ds	d	l_1	l_2	d_1	l_3	a_p	形式 Form	n_{max}	HWS
M409.032.D32.6.03B	3	32	32	111	47	31	60	9.3	B	15600	40900R
M409.040.D32.6.04B	4	40	32	111	47	39	60	9.3	B	13900	40900R

梳齿
wide pitch

配件
Spare Parts

杆式铣刀 End Mill	锁紧螺钉 Clamping Screw	TORX PLUS®扳手 TORX PLUS® Wrench
M409...	**030.3511.T10P**	**T10PL**

螺纹锁紧铣刀
Screw-in cutter

M409

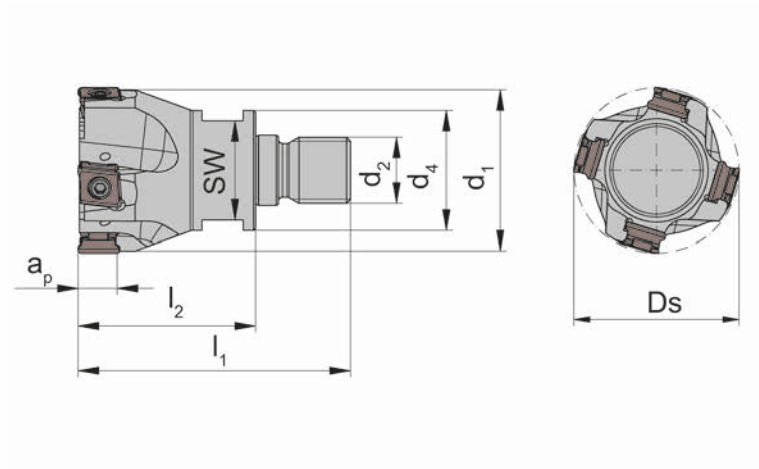

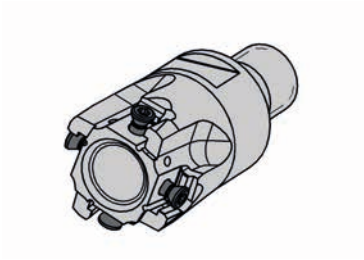

图示=右手型
Picture = right hand cutting version

产品型号 Part number	Z	Ds	l_1	l_2	d_1	a_p	d_2	d_4	SW	n_{max}	HWS	HMS
M409.032.M16.6.03	3	32	66	43	31	9.3	M16	29	24	15600	40900R	16001
M409.032.M16.6.04	4	32	66	43	31	9.3	M16	29	24	15600	40900R	16001
M409.040.M16.6.04	4	40	66	43	39	9.3	M16	29	24	13900	40900R	16001
M409.040.M16.6.05	5	40	66	43	39	9.3	M16	29	24	13900	40900R	16001

配件
Spare Parts

螺纹锁紧铣刀 Screw-in cutter	锁紧螺钉 Clamping Screw	TORX PLUS®扳手 TORX PLUS® Wrench
M409...	**030.3511.T10P**	**T10PL**

方肩铣
Shoulder Mill

M409

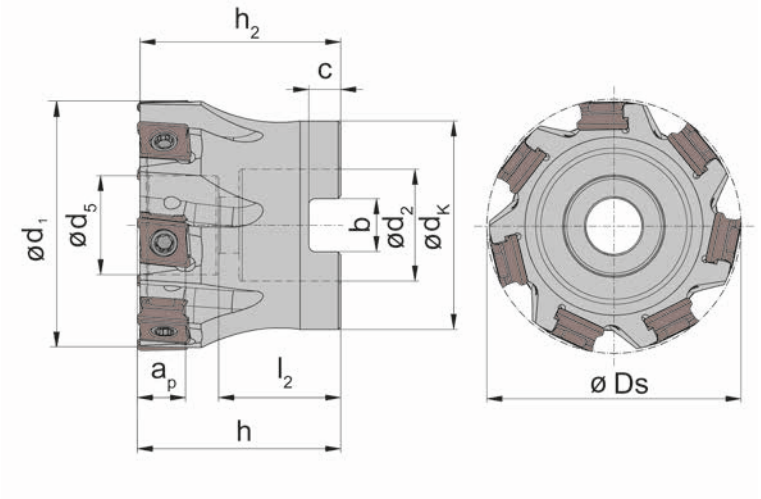

图示=右手型
Picture = right hand cutting version

产品型号 Part number	Z	Ds	a_p	h_2	h	d_5	d_1	d_2	l_2	b	C	d_K	n_{max}	HWS
M409.0040.A16.05	5	40	9.3	34.5	35	16	39	16	22	8.4	5.6	33	13900	40900R
M409.0050.A22.07	7	50	9.3	39.5	40	19.5	49	22	24	10.4	6.3	41	12500	40900R
M409.0063.A22.08	8	63	9.3	39.5	40	19.5	62	22	25	10.4	6.3	49	11100	40900R
M409.0063.A27.08	8	63	9.3	39.5	40	23	62	27	27.5	12.4	7	49	11100	40900R
M409.0080.A27.10	10	80	9.3	49.5	50	21.5	79	27	28	12.4	7	59	9800	40900R
M409.0100.A32.12	12	100	9.3	49.5	50	30	99	32	33	14.4	8	80	8800	40900R
M409.0125.A40.16	16	125	9.3	62.5	63	56	124	40	35	16.4	9	89	7900	40900R
M409.0160.A40.20	20	160	9.3	62.5	63	90	159	40	29	16.4	9	110	6900	40900R
M409.0200.A60.24	24	200	9.3	62.5	63	135	199	60	42	25.7	14	130	6200	40900R
M409.0250.A60.30	30	250	9.3	62.5	63	150	249	60	42	25.7	14	160	5500	40900R

芯轴接口: ø100 mm 以下根据 DIN 8030-A, ø125 mm 根据 DIN8030-B,ø160 mm 根据 DIN8030-C
up to ø100 mm arbour mounted cutter as per DIN 8030-A, ø125 DIN8030-B, from ø160 mm DIN 8030-C

大于ø160 mm,可用性及内冷根据客户要求
from ø160 mm: availability and internal coolant upon customers request

配件
Spare Parts

方肩铣 Shoulder Mill	锁紧螺钉 Clamping Screw	TORX PLUS®扳手 TORX PLUS® Wrench	锁紧栓 Tightening Bolt
M409....	**030.3511.T10P**	**T10PL**	
M409.0...A40...	**030.3511.T10P**	**T10PL**	**20.30.6367**
M409.0...A60...	**030.3511.T10P**	**T10PL**	**30.45.6367**

方肩铣
Shoulder Mill

M409

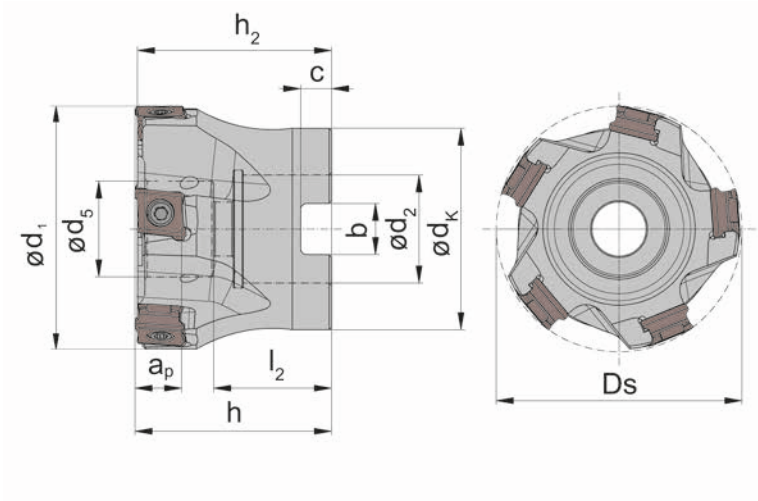

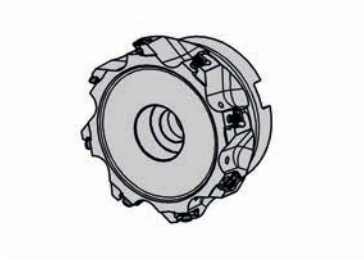

图示=右手型
Picture = right hand cutting version

产品型号 Part number	Z	Ds	a_p	h_2	h	d_5	d_1	d_2	l_2	b	C	d_K	n_{max}	HWS
M409.0040.A16.04	4	40	9.3	34.5	35	16	39	16	22	8.4	5.6	33	13900	40900R
M409.0050.A22.05	5	50	9.3	39.5	40	19.5	49	22	24	10.4	6.3	41	12500	40900R
M409.0063.A22.06	6	63	9.3	39.5	40	19.5	62	22	25	10.4	6.3	49	11100	40900R
M409.0063.A27.06	6	63	9.3	39.5	40	23	62	27	27.5	12.4	7	49	11100	40900R
M409.0080.A27.07	7	80	9.3	49.5	50	21.5	79	27	28	12.4	7	59	9800	40900R
M409.0100.A32.08	8	100	9.3	49.5	50	30	99	32	33	14.4	8	80	8800	40900R
M409.0125.A40.10	10	125	9.3	62.5	63	56	124	40	35	16.4	9	89	7900	40900R
M409.0160.A40.14	14	160	9.3	62.5	63	90	159	40	29	16.4	9	110	6900	40900R
M409.0200.A60.16	16	200	9.3	62.5	63	135	199	60	42	25.7	14	130	6200	40900R
M409.0250.A60.20	20	250	9.3	62.5	63	150	249	60	42	25.7	14	160	5500	40900R

芯轴接口: ø100 mm 以下根据 DIN 8030-A, ø125 mm 根据 DIN8030-B,ø160 mm 根据 DIN8030-C
up to ø100 mm arbour mounted cutter as per DIN 8030-A, ø125 DIN8030-B, from ø160 mm DIN 8030-C

大于ø160 mm,可用性及内冷根据客户要求
from ø160 mm: availability and internal coolant upon customers request

配件
Spare Parts

方肩铣 Shoulder Mill	锁紧螺钉 Clamping Screw	TORX PLUS®扳手 TORX PLUS® Wrench	锁紧栓 Tightening Bolt
M409....	**030.3511.T10P**	**T10PL**	
M409.0...A40...	**030.3511.T10P**	**T10PL**	**20.30.6367**
M409.0...A60...	**030.3511.T10P**	**T10PL**	**30.45.6367**

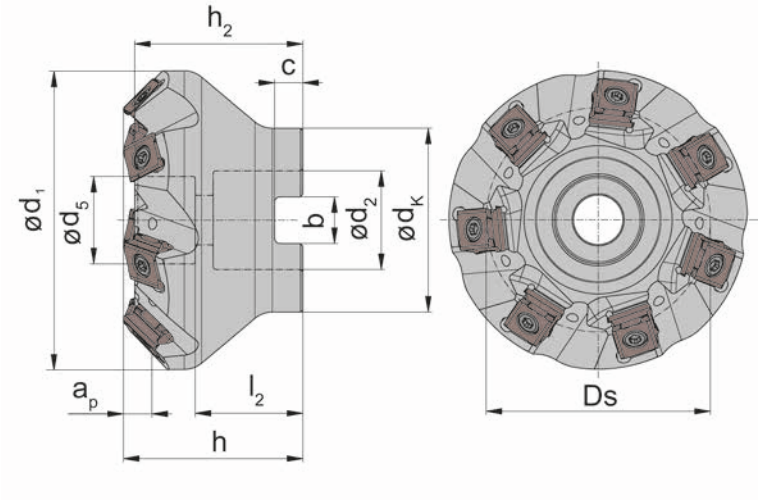

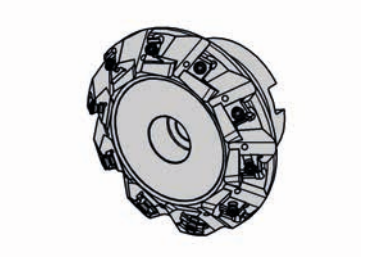

图示=右手型
Picture = right hand cutting version

产品型号 Part number	Z	Ds	a_p	h_2	h	d_5	d_1	d_2	l_2	b	C	d_K	n_{max}	HWS
M409.0040.A16.45.05	5	40	6.2	32.5	35	16	55	16	22	8.4	5.6	33	13900	40900R
M409.0050.A22.45.07	7	50	6.2	37.5	40	19.5	67	22	24	10.4	6.3	41	12500	40900R
M409.0063.A22.45.08	8	63	6.2	37.5	40	19.5	80	22	25	10.4	6.3	49	11100	40900R
M409.0063.A27.45.08	8	63	6.2	37.5	40	22	79	27	27.5	12.4	7	49	11100	40900R
M409.0080.A27.45.10	10	80	6.2	47.5	50	22	96	27	27.5	12.4	7	59	9800	40900R
M409.0125.A40.45.16	16	125	6.2	60.5	63	56	141	40	35	16.4	9	89	7900	40900R
M409.0160.A40.45.20	20	160	6.2	60.5	63	90	176	40	29	16.4	9	110	6900	40900R
M409.0200.A60.45.24	24	200	6.2	60.5	63	135	216	60	42	25.7	14	130	6200	40900R
M409.0250.A60.45.30	30	250	6.2	60.5	63	150	266	60	42	25.7	14	160	5500	40900R

芯轴接口: ø100 mm 以下根据 DIN 8030-A, ø125 mm 根据 DIN8030-B,ø160 mm 根据 DIN8030-C
up to ø100 mm arbour mounted cutter as per DIN 8030-A, ø125 DIN8030-B, from ø160 mm DIN 8030-C

使用圆角 r_x = 0.8 mm 刀片可达到 a_p = 6.2 mm
ap = 6,2 mm can be reached with rx = 0,8 mm

大于ø160 mm,可用性及内冷根据客户要求
from ø160 mm: availability and internal coolant upon customers request

配件
Spare Parts

面铣 Face Mill	锁紧螺钉 Clamping Screw	TORX PLUS®扳手 TORX PLUS® Wrench	锁紧栓 Tightening Bolt
M409.0...	**030.3511.T10P**	**T10PL**	
M409.0...A40...	**030.3511.T10P**	**T10PL**	**20.30.6367**
M409.0...A60...	**030.3511.T10P**	**T10PL**	**30.45.6367**

面铣
Face Mill

M409

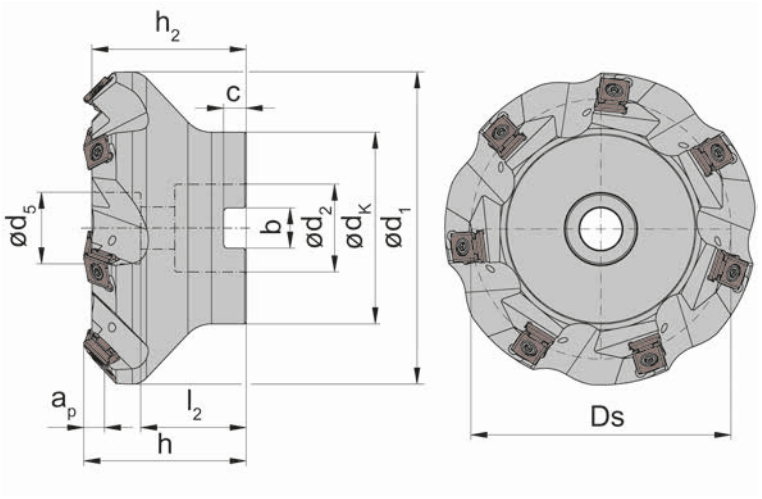

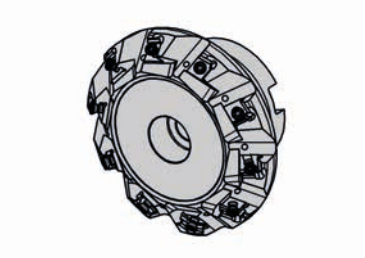

图示=右手型
Picture = right hand cutting version

产品型号 Part number	Z	Ds	a_p	h_2	h	d_5	d_1	d_2	l_2	b	C	d_K	n_{max}	HWS
M409.0040.A16.45.04	4	40	6.2	32.5	35	17	55	16	18	8.4	5.6	33	13900	40900R
M409.0050.A22.45.05	5	50	6.2	37.5	40	20	67	22	20	10.4	6.3	41	12500	40900R
M409.0063.A22.45.06	6	63	6.2	37.5	40	20	79	22	20	10.4	6.3	49	11100	40900R
M409.0080.A27.45.07	7	80	6.2	47.5	50	22	96	27	27.5	12.4	7	59	9800	40900R
M409.0100.A32.45.08	8	100	6.2	47.5	50	30	116	32	32.5	14.4	8	80	8800	40900R
M409.0160.A40.45.14	14	160	6.2	60.5	63	90	176	40	29	16.4	9	110	6900	40900R
M409.0200.A60.45.16	16	200	6.2	60.5	63	135	216	40	42	25.7	14	130	6200	40900R

芯轴接口: ø100 mm 以下根据 DIN 8030-A, ø125 mm 根据 DIN8030-B,ø160 mm 根据 DIN8030-C
up to ø100 mm arbour mounted cutter as per DIN 8030-A, ø125 DIN8030-B, from ø160 mm DIN 8030-C

使用圆角 r_x = 0.8 mm 刀片可达到 a_p = 6.2 mm
ap = 6,2 mm can be reached with rx = 0,8 mm

大于ø160 mm,可用性及内冷根据客户要求
from ø160 mm: availability and internal coolant upon customers request

配件
Spare Parts

面铣 Face Mill	锁紧螺钉 Clamping Screw	TORX PLUS®扳手 TORX PLUS® Wrench	锁紧栓 Tightening Bolt
M409....	**030.3511.T10P**	**T10PL**	
M409.0160.A40.45.14	**030.3511.T10P**	**T10PL**	**20.30.6367**
M409.0200.A60.45.16	**030.3511.T10P**	**T10PL**	**30.45.6367**

M409

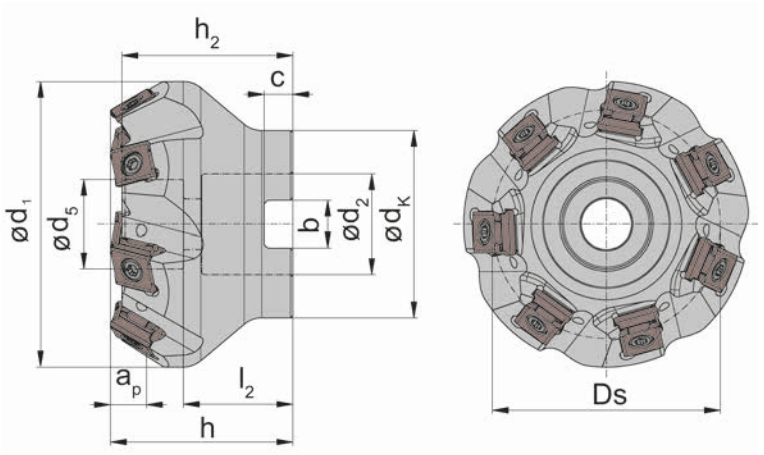

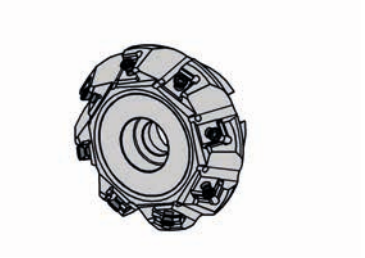

图示=右手型
Picture = right hand cutting version

产品型号 Part number	Z	Ds	a_p	h_2	h	d_5	d_1	d_2	b	C	d_K	n_{max}	HWS
M409.0040.A16.60.05	5	40	7.7	32.5	35	16	50	16	8.4	5.6	33	13900	40900R
M409.0050.A22.60.07	7	50	7.7	37.5	40	19.5	63	22	10.4	6.3	41	12500	40900R
M409.0063.A22.60.08	8	63	7.7	37.5	40	19.5	73	22	10.4	6.3	49	11100	40900R
M409.0063.A27.60.08	8	63	7.7	37.5	40	19.5	75	27	12.4	7	49	11100	40900R
M409.0100.A32.60.12	12	100	7.7	47.5	50	22	112	32	14.4	8	59	8800	40900R
M409.0160.A40.60.20	20	160	7.7	60.5	63	90	172	40	16.4	9	110	6900	40900R
M409.0200.A60.60.24	24	200	7.7	60.5	63	135	212	60	25.7	14	130	6200	40900R
M409.0250.A60.60.30	30	250	7.7	60.5	63	150	262	60	25.7	14	160	5500	40900R

芯轴接口: ø100 mm 以下根据 DIN 8030-A, ø125 mm 根据 DIN8030-B,ø160 mm 根据 DIN8030-C
up to ø100 mm arbour mounted cutter as per DIN 8030-A, ø125 DIN8030-B, from ø160 mm DIN 8030-C

使用圆角 r_x = 0.8 mm 刀片可达到 a_p = 7.7 mm
ap = 7,7 mm can be reached with rx = 0,8 mm

大于ø160 mm,可用性及内冷根据客户要求
from ø160 mm: availability and internal coolant upon customers request

配件
Spare Parts

面铣 Face Mill	锁紧螺钉 Clamping Screw	TORX PLUS®扳手 TORX PLUS® Wrench	锁紧栓 Tightening Bolt
M409....	**030.3511.T10P**	**T10PL**	
M409.0160.A40.60.20	**030.3511.T10P**	**T10PL**	**20.30.6367**
M409.02...	**030.3511.T10P**	**T10PL**	**30.45.6367**

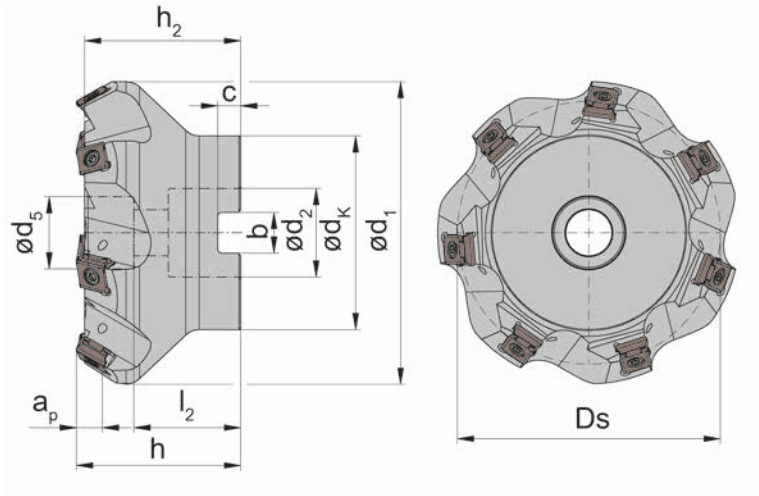

图示=右手型
Picture = right hand cutting version

产品型号 Part number	Z	Ds	a_p	h_2	h	d_5	d_1	d_2	b	C	d_K	n_{max}	HWS
M409.0040.A16.60.04	4	40	7.7	32.5	35	17	52	16	8.4	5.6	33	13900	40900R
M409.0050.A22.60.05	5	50	7.7	37.5	40	20	62	22	10.4	6.3	41	12500	40900R
M409.0100.A32.60.08	8	100	7.7	47.5	50	30	112	32	14.4	8	80	8800	40900R
M409.0125.A40.60.10	10	125	7.7	60.5	63	56	137	40	16.4	9	89	7900	40900R
M409.0160.A40.60.14	14	160	7.7	60.5	63	90	172	40	16.4	9	110	6900	40900R
M409.0200.A60.60.16	16	200	7.7	60.5	63	135	212	60	25.7	14	130	6200	40900R
M409.0250.A60.60.20	20	250	7.7	60.5	63	150	262	60	25.7	14	160	5500	40900R

芯轴接口: ø100 mm 以下根据 DIN 8030-A, ø125 mm 根据 DIN8030-B,ø160 mm 根据 DIN8030-C
up to ø100 mm arbour mounted cutter as per DIN 8030-A, ø125 DIN8030-B, from ø160 mm DIN 8030-C

使用圆角 r_x = 0.8 mm 刀片可达到 a_p = 7.7 mm
ap = 7,7 mm can be reached with rx = 0,8 mm

大于ø160 mm,可用性及内冷根据客户要求
from ø160 mm: availability and internal coolant upon customers request

配件
Spare Parts

面铣 Face Mill	锁紧螺钉 Clamping Screw	TORX PLUS®扳手 TORX PLUS® Wrench	锁紧栓 Tightening Bolt
M409....	**030.3511.T10P**	**T10PL**	
M409.0125.../...160...	**030.3511.T10P**	**T10PL**	**20.30.6367**
M409.02...	**030.3511.T10P**	**T10PL**	**30.45.6367**

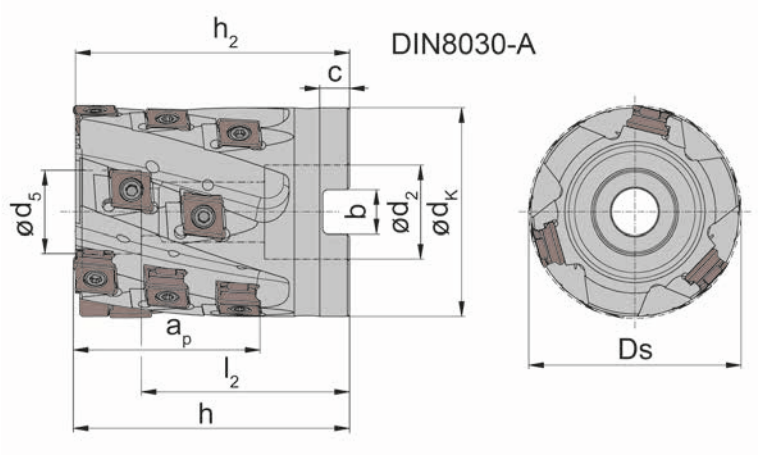

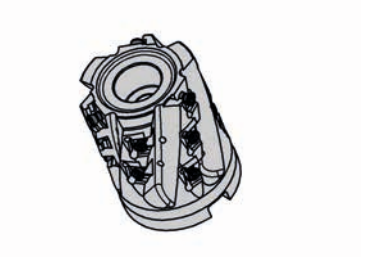

图示=右手型
Picture = right hand cutting version

产品型号 Part number	Z	Z_{eff}	Ds	a_p	h_2	h	d_5	d_2	l_2	b	C	d_K	n_{max}	HWS
M409.0040.A16.W.10	10	2	40	43.2	64.5	65	16	16	53.4	8.4	5.6	39	13900	40900R
M409.0050.A22.W.15	15	3	50	43.2	64.5	65	19.5	22	49	10.4	6.3	49	12500	40900R
M409.0063.A27.W.20	20	4	63	43.2	64.5	65	21.5	27	48.8	12.4	7	62	11100	40900R

配件
Spare Parts

玉米铣 Shell End Mill	锁紧螺钉 Clamping Screw	TORX PLUS®扳手 TORX PLUS® Wrench
M409...	**030.3511.T10P**	**T10PL**

盘铣刀
Disc Milling Cutter

M409

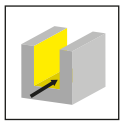

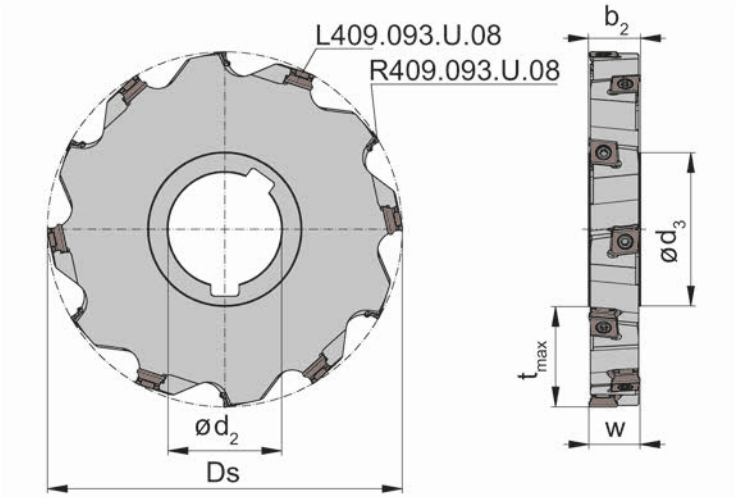

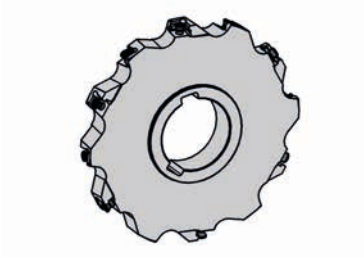

图示=右手型
Picture = right hand cutting version

产品型号 Part number	Z	Z_{eff}	Ds	t_{max}	d_2	b_2	w	n_{max}	右手型刀片 right hand insert	左手型刀片 left hand insert	HWS
M409.0100.32.S.14	10	5	100	26	32	14.4	14	8800	5x R409.093.U.08	5x L409.093.U.08	40900R • 40900L
M409.0100.32.S.18	10	5	100	26	32	18.4	18	8800	5x R409.093.U.08	5x L409.093.U.08	40900R • 40900L
M409.0125.40.S.14	12	6	125	34.5	40	14.4	14	7900	6x R409.093...	6x L409.093...	40900R • 40900L
M409.0125.40.S.18	12	6	125	34.5	40	18.4	18	7900	6x R409.093...	6x L409.093...	40900R • 40900L

配件
Spare Parts

盘铣刀 Disc Milling Cutter	锁紧螺钉 Clamping Screw	TORX PLUS®扳手 TORX PLUS® Wrench
M409...	**030.3511.T10P**	**T10PL**

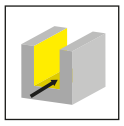

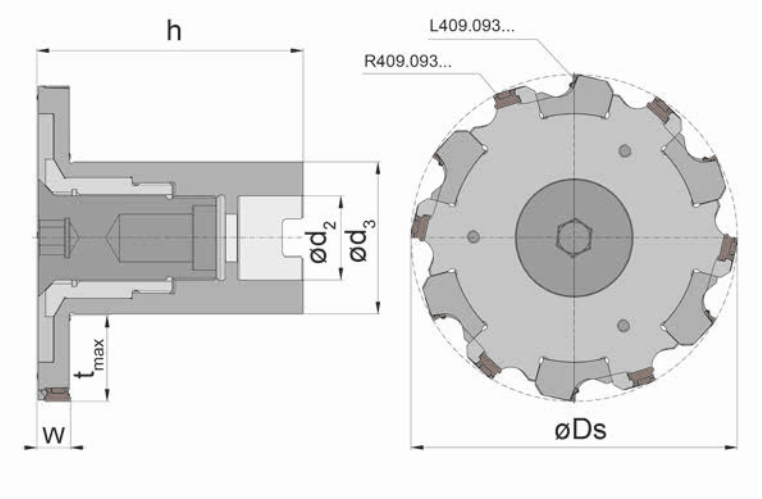

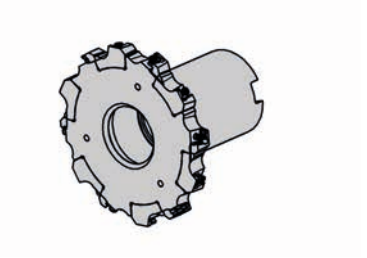

产品型号 Part number	Z	Z_{eff}	Ds	t_{max}	h_{min}	h_{max}	d_3	d_2	w_{min}	w_{max}	右手型刀片 right hand insert	左手型刀片 left hand insert	HWS
M409.0125.A32.ES.129	12	6	125	32.5	102	107.9	58	32	12.9	18.8	6x R409.093...	6x L409.093...	40900R • 40900L

芯轴刀柄式铣刀是可调的！
Arbour mounted cutter is adjustable!

配件
Spare Parts

芯轴刀柄式铣刀 Arbour Mounted Cutter	螺钉 Screw	锁紧螺钉 Clamping Screw	TORX PLUS®扳手 TORX PLUS® Wrench	调整适配器 Adjustment Adapter
M409.0125.A32.ES.129	**C409.0125.A32.ES.129**	**030.3511.T10P**	**T10PL**	**A409.0125.A32.ES.129**

可转位刀片
Indexable insert

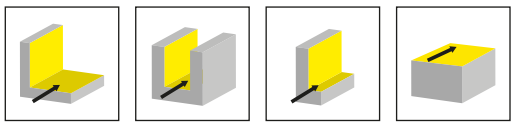

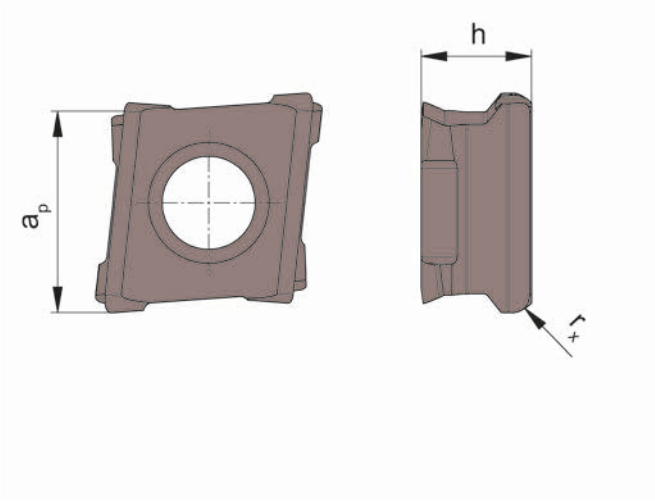

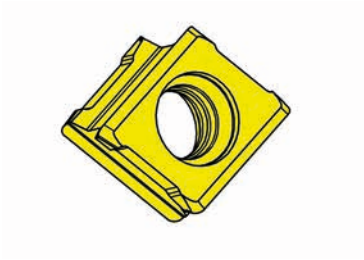

硬质合金牌号
Carbide grades

▲ 库存 on stock　　Δ 4周 4 weeks

产品型号 Part number	a_p	h	r_x	HIS		K10	AS46	AS4B	IG35	NE2B
R409.093.U.02	9.3	5.2	0.2	40900R			Δ	▲		
R409.093.U.04	9.3	5.2	0.4	40900R			▲	▲		
R409.093.U.08	9.3	5.2	0.8	40900R			▲	▲		
R409.093.U.12	9.3	5.2	1.2	40900R			▲	▲		
R409.093.W.02	9.3	5.2	0.2	40900R		▲			▲	▲
R409.093.W.04	9.3	5.2	0.4	40900R					▲	▲
R409.093.W.08	9.3	5.2	0.8	40900R					▲	▲
R409.093.W.12	9.3	5.2	1.2	40900R					▲	▲
L409.093.U.02	9.3	5.2	0.2	40900L			Δ	▲		
L409.093.U.04	9.3	5.2	0.4	40900L			▲	▲		
L409.093.U.08	9.3	5.2	0.8	40900L			▲	▲		
L409.093.U.12	9.3	5.2	1.2	40900L				▲		
L409.093.W.02	9.3	5.2	0.2	40900L		▲			▲	▲
L409.093.W.04	9.3	5.2	0.4	40900L					▲	▲
L409.093.W.08	9.3	5.2	0.8	40900L					▲	▲
L409.093.W.12	9.3	5.2	1.2	40900L					▲	Δ
					P	●	o	●	-	-
					M	o	o	●	●	-
					K	●	●	●	-	-
					N	●	o	o	-	●
					S	o	o	●	●	-
					H	-	-	-	-	-

4个切削刃刀片
with 4 usable cutting edges

可转位刀片
Indexable insert

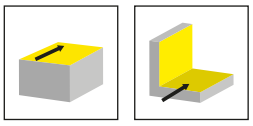

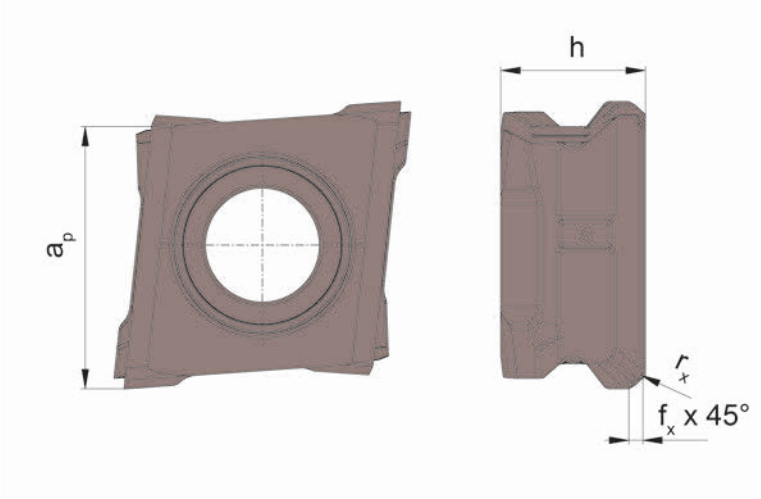

硬质合金牌号
Carbide grades

▲ 库存
on stock

Δ 4周
4 weeks

产品型号 Part number	a_p	h	r_x	fx	HIS		AS45	AS46
RS409.090.P.F05	9	5.2	0.6	0.5	40900R		▲	▲
LS409.090.P.F05	9	5.2	0.6	0.5	40900L		▲	▲
						P	●	o
						M	●	o
						K	●	●
						N	o	o
						S	●	o
						H	-	-

4个切削刃刀片
with 4 usable cutting edges

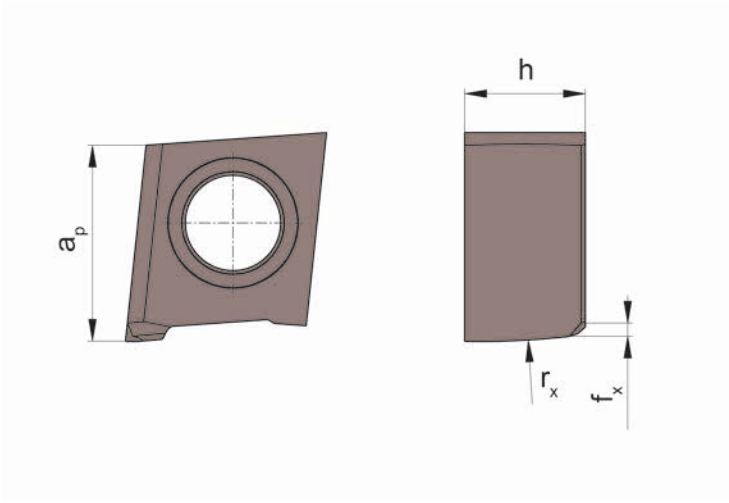

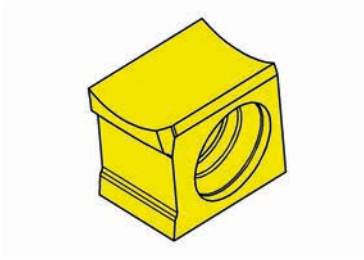

硬质合金牌号
Carbide grades

▲ 库存
on stock

Δ 4周
4 weeks

产品型号 Part number	a_p	h	r_x	fx	HIS		AS46	AS4B
R409.093.S.F4	9.3	5.2	100	0.4	40900R		▲	▲
						P	o	●
						M	o	●
						K	●	●
						N	o	o
						S	o	●
						H	-	-

修光刃几何角度，精密磨削
Wiper geometry, precision ground

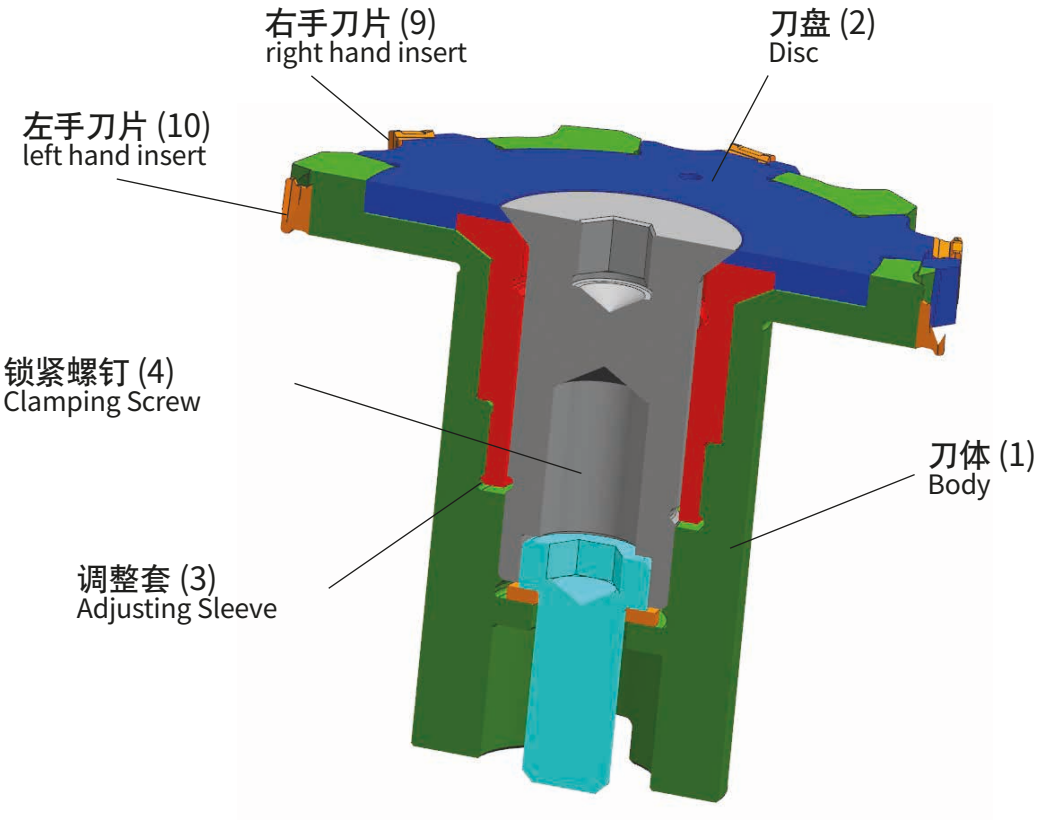
右手刀片 (9)
right hand insert
刀盘 (2)
Disc
左手刀片 (10)
left hand insert
锁紧螺钉 (4)
Clamping Screw
刀体 (1)
Body
调整套 (3)
Adjusting Sleeve

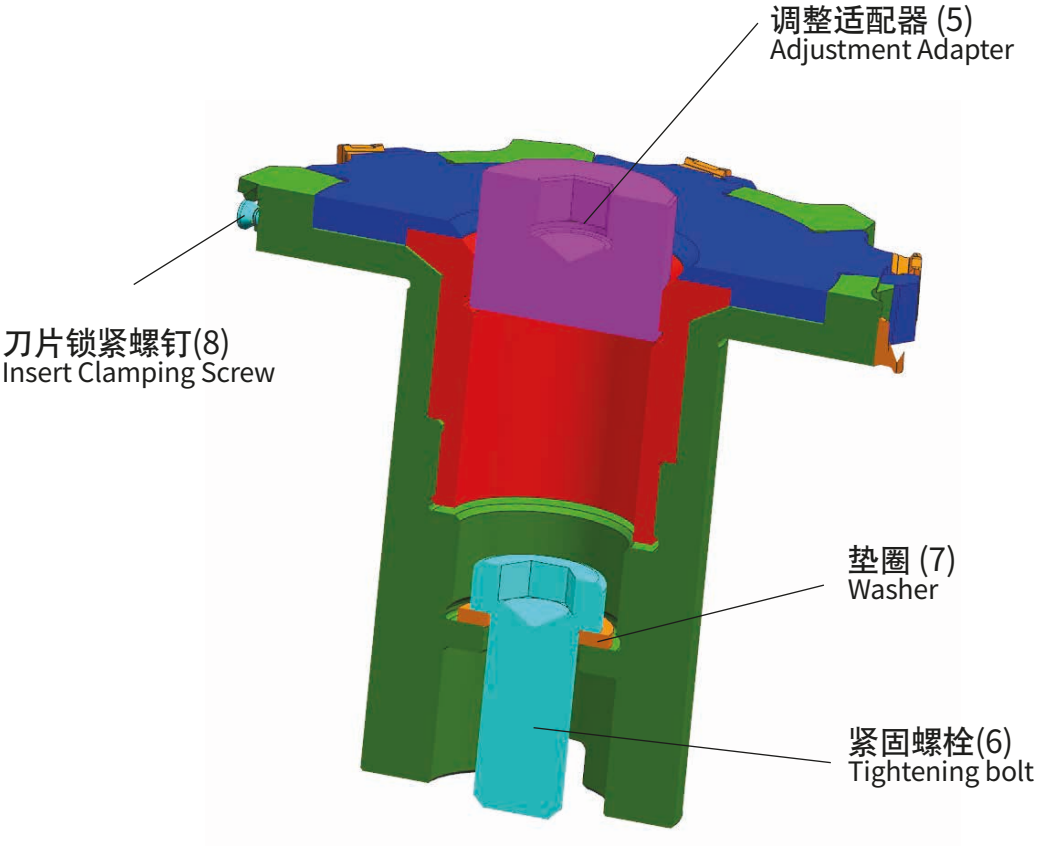
调整适配器 (5)
Adjustment Adapter
刀片锁紧螺钉(8)
Insert Clamping Screw
垫圈 (7)
Washer
紧固螺栓(6)
Tightening bolt

1. 使用锁紧螺钉(8)安装可转位刀片;[右手刀片(9)和左手刀片(10)版本]

   Mount the indexable insert using clamping screw(8);
   [right-hand insert (9) and left-hand insert (10) version]

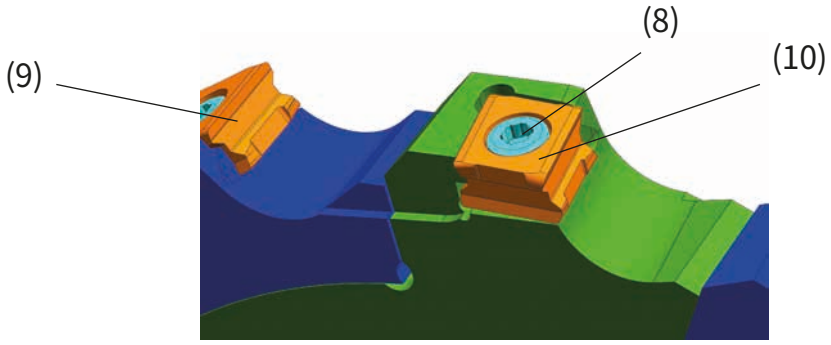

2. 松开安装螺钉 (4) 旋转取出

   Loosen the clamping screw (4) and twist it out

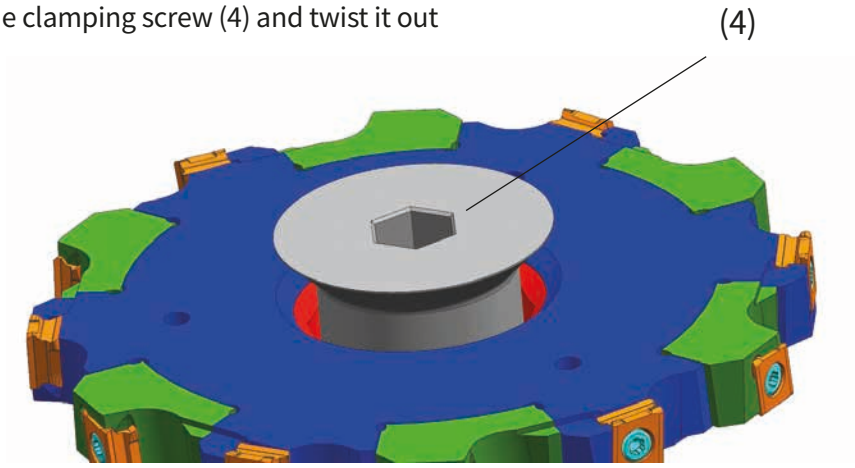

3. 将铣刀与封闭的垫圈(7)和刀具紧固螺栓(6)安装在刀柄上(未示出)。

Mount the milling tool with the enclosed washer (7) and cutter tightening bolt (6) on the toolholder (not shown)

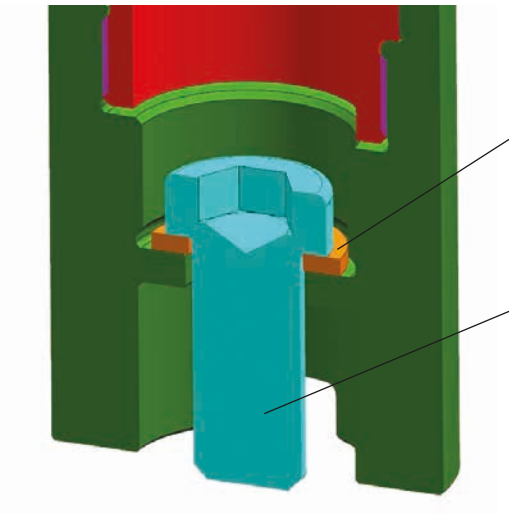

4. 借助调整适配器(5)将铣刀的切削宽度预先设定为所需尺寸。

Pre-set the cutting width of the milling cutter to the required dimension with the aid of the adjustment adapter (5)

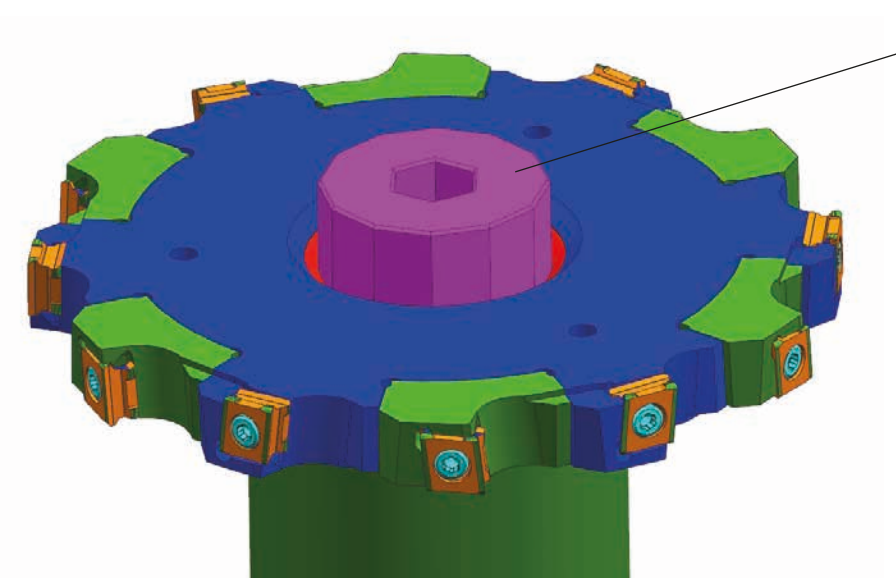

对刀具校正器的调整:

a. 将安装好的刀具插入校正器的适配器。
b. 保证刀具的最小直径 (409系列 → 12.9 mm; 406系列 → 9.6 mm)
注意: 调节套筒(3)完全拧紧

Adjustment on a tool presetter:
a. Insert the mounted tool into the adapter of the presetter.
b. Ensure the minimum dimension (system 409 → 12.9 mm; System 406 → 9.6 mm) of the tool.
Note: Adjusting sleeve (3) is tightened fully

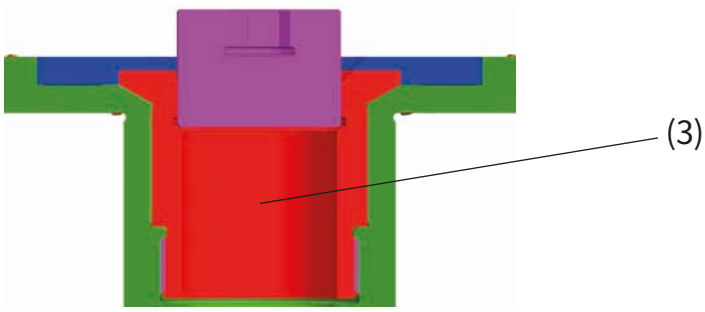

c. 测量靠下一边的切削刃[左手刀片(9)]
d. 测量靠上一边的切削刃 [右手刀片 (10)]

c. Measure the lower cutting edge row [left hand inserts (9)]
d. Measure the upper cutting edge row [right hand inserts (10)]

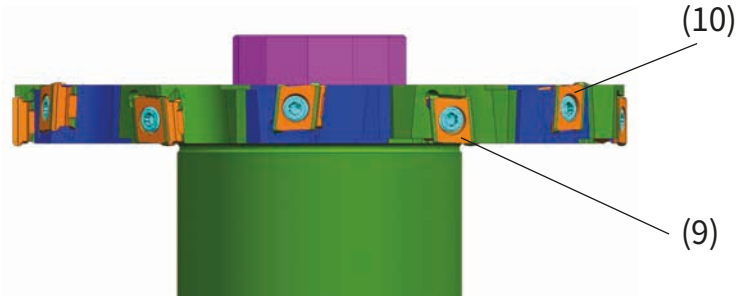

e. 通过调节适配器(5)调节切削宽度(每转轴向调节对应1.5 mm)

e. Adjust the cutting width by means of the adjustment adapter (5) (axial adjustment for each turn corresponds to 1.5 mm)

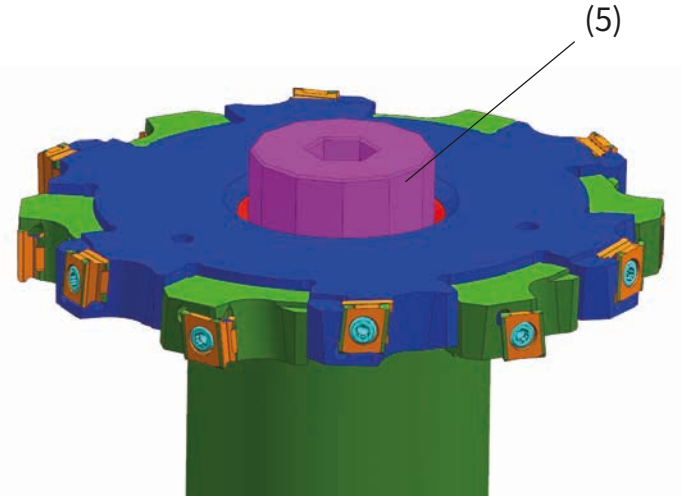

f. 旋入并拧紧夹紧螺钉(4)

f. Screw in and tighten the clamping screw (4)

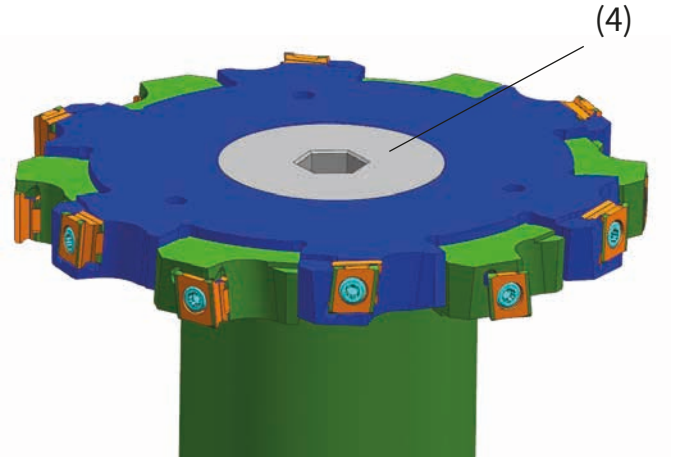

注意:

1) 第一道槽加工完毕后，必须进行测量或检查。必要时，必须对铣刀的切削宽度进行校正。
2) 在装配和拆卸过程中，各个部件必须保持清洁
3) 我们建议对调节机构的接触面和螺纹面进行润滑。
4) 观察最大的切削宽度:
   409系列 → 18.8 mm; 406 系列→ 12.9 mm

Note:

1) After the first groove has been machined, it must be measured or checked. If necessary, the cutting width of the milling tool must be corrected.
2) The individual parts must be kept clean during assembly and disassembly
3) We recommend lubricating or greasing the contact and thread surfaces of the adjustment mechanism.
4) Observe the maximum cutting width:
   System 409 → 18.8 mm; System 406 → 12.9 mm

方肩铣
Shoulder Mill
M610

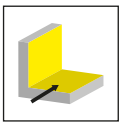

页/Page
560

芯轴刀柄式铣刀
Arbour Mounted Cutter
M610

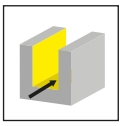

页/Page
561

可转位刀片
Indexable insert
610

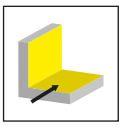

页/Page
562

M610

立装铣削系列 610

切削刃 Ø 100-125 mm

Tangential milling with system 610

cutting edge Ø 100-125 mm

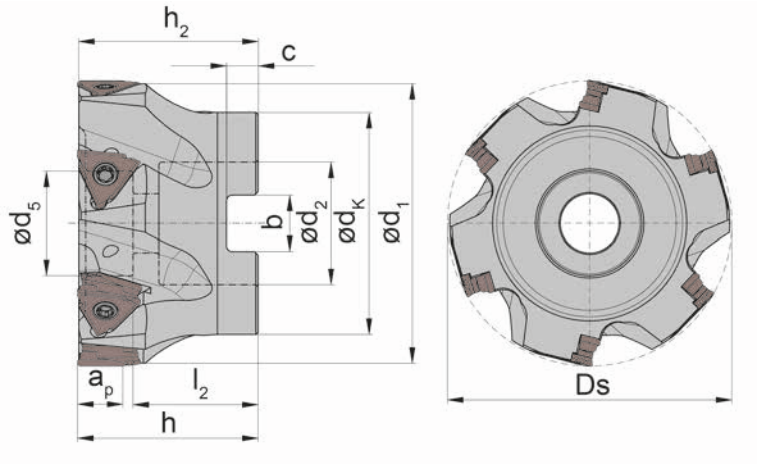

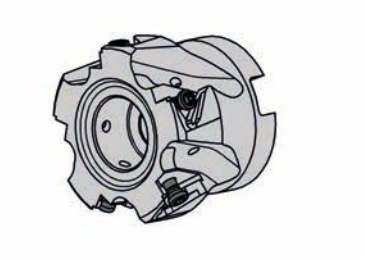

产品型号 Part number	Z	Ds	a_p	h_2	h	d_5	d_1	d_2	l_2	b	C	d_K	n_{max}	HWS
M610.0050.A22.05	5	50	9.9	39.7	40	19.5	49	22	24	10.4	6.3	41	10000	61000R
M610.0063.A22.06	6	63	9.9	39.7	40	19.5	62	22	25	10.4	6.3	49	9000	61000R
M610.0063.A27.06	6	63	9.9	39.7	40	23	62	27	27.5	12.4	7	49	9000	61000R
M610.0080.A27.08	8	80	9.9	49.7	50	21.5	79	27	28	12.4	7	59	8000	61000R
M610.0100.A32.10	10	100	9.9	49.7	50	30	99	32	33	14.4	8	80	7000	61000R
M610.0125.A40.12	12	125	9.9	62.7	63	56	124	40	35	16.4	9	89	6000	61000R

配件
Spare Parts

方肩铣 Shoulder Mill	锁紧螺钉 Clamping Screw	TORX PLUS®扳手 TORX PLUS® Wrench	锁紧栓 Tightening Bolt
M610....	**030.3513.T15P**	**T15PQ**	
M610.0125.A40.12	**030.3513.T15P**	**T15PQ**	**20.30.6367**

芯轴刀柄式铣刀
Arbour Mounted Cutter

M610

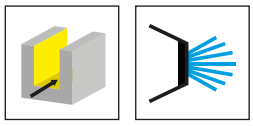

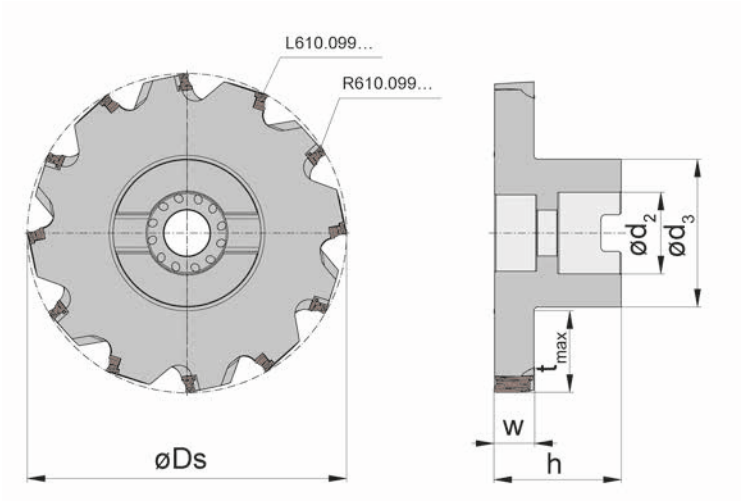

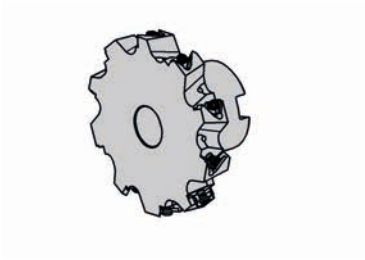

产品型号 Part number	Z	Z_{eff}	Ds	t_{max}	h	d_3	d_2	n_{max}	w	右手型刀片 right hand insert	左手型刀片 left hand insert	HWS
M610.0125.A32.S.16	12	6	125	32.5	50	58	32	6000	16	6x R610.099.U....	6x L610.099.U....	61000L

配件
Spare Parts

芯轴刀柄式铣刀 Arbour Mounted Cutter	锁紧螺钉 Clamping Screw	TORX PLUS®扳手 TORX PLUS® Wrench
M610.0125.A32.S.16	**030.3513.T15P**	**T15PQ**

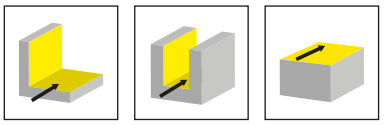

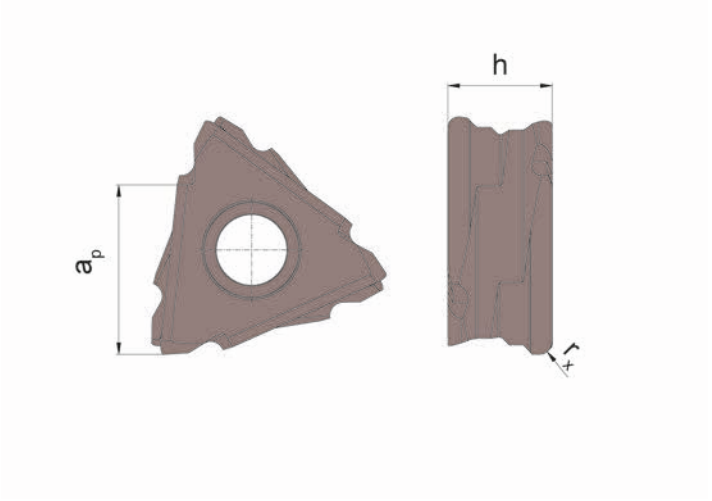

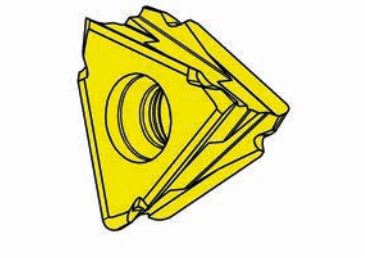

硬质合金牌号
Carbide grades

▲ 库存
on stock

Δ 4周
4 weeks

产品型号 Part number	a_p	h	r_x	HIS		AS46	AS4B	IG35	NE2B
R610.099.U.04	9.9	6.2	0.4	61000R		▲	▲		
R610.099.W.04	9.9	6.2	0.4	61000R				▲	Δ
R610.099.W.08	9.9	6.2	0.8	61000R				▲	Δ
L610.099.U.04	9.9	6.2	0.4	61000L		Δ	▲		
L610.099.W.04	9.9	6.2	0.4	61000L				Δ	Δ
L610.099.W.08	9.9	6.2	0.8	61000L				Δ	Δ
					P	o	●	-	-
					M	o	●	●	-
					K	●	●	-	-
					N	o	o	-	●
					S	o	●	●	-
					H	-	-	-	-

切屑中间厚度 h_m 计算进给量
Medium chip thickness h_m for calculating the feed rate

ISO	406 / 409	610
	h_m (mm)	h_m (mm)
P	0.08 - 0.14	0.08 - 0.10
M	0.07- 0.09	0.04 - 0.06
K	0.12 - 0.16	0.09 - 0.11
N	0.1 - 0.12	0.06 - 0.08
S	0.06 - 0.09	0.04 - 0.06

$f_z = (h_m \times \pi \times d_e \times \phi s) / (360° \times a_e)$ [简化 $f_z = h_m \times \sqrt{(d_e/a_e)}$ 以及 $a_e/d_e < 0,3$]

$f_z = (h_m \times \pi \times d_e \times \phi s) / (360° \times a_e)$ [simplified $f_z = h_m \times \sqrt{(d_e/a_e)}$ with $a_e/d_e < 0,3$]

技术信息
Technical Instructions

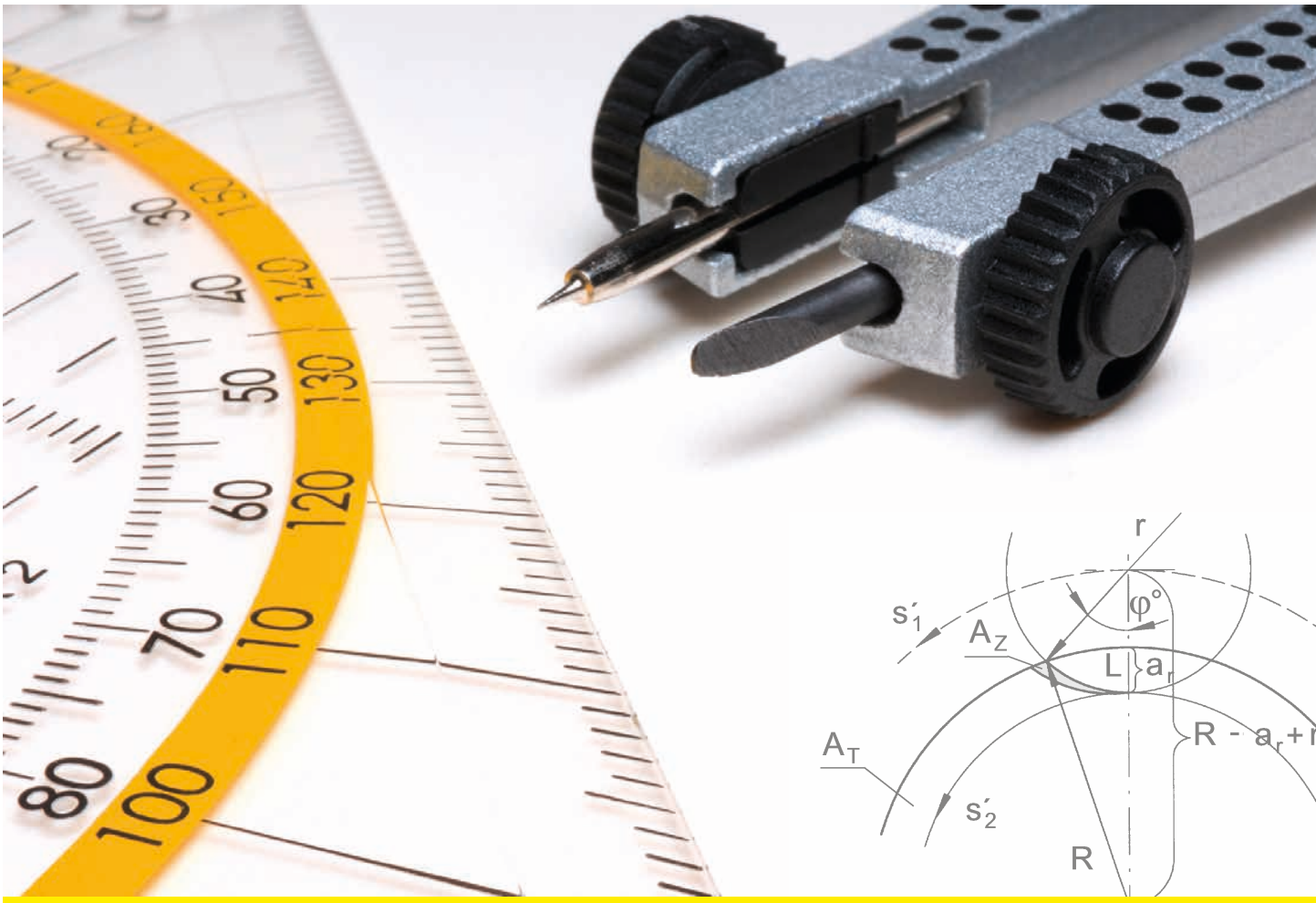

概要/Summary　　页/Page

螺钉扭矩 Torque Specification	566 - 568
技术信息 Technical Instructions	569 - 570
符号 Symbols	571
切削参数 Cutting Data	572 - 577
涂层概览 Coating Overview	578 - 579
附加设备 Additional Equipment	580 - 585

螺钉扭矩
Torque of Screws

对于刀片的螺钉允许使用以下的扭矩，我们建议对螺钉不要额外使用润滑剂（如铜膏等）。

Following torques are allowed for screws of inserts. We do not recommend using any additional lubricants such as copper paste or similar for the screws.

型号 Type	螺钉 Screw	M_d Nm	夹紧扳手 Clamping wrench	刀板 Blade
380	5.12T20P	**6.50**	T20PQ	DT20PK / DT20PQ
381	5.12T20P	**6.50**	T20PQ	DT20PK / DT20PQ
382...06	5F.06T15P	**5.50**	T15PQ	DT15PK
382...08	5F.08T20P	**5.50**	T20PQ	DT20PK
382...10/12/14	5.10T20P	**6.50**	T20PQ	DT20PK / DT20PQ
383...06	5F.06T15P	**5.50**	T15PQ	DT15PK
383...08	5F.08T20P	**5.50**	T20PQ	DT20PK
383...10/12	5.10T20P	**6.50**	T20PQ	DT20PK / DT20PQ
ABS	5.12T20P	**6.50**	T20PQ	DT20PK / DT20PQ
B105/BKT105	6.075T15P	**5.00**	T15PQ	DT15PK
B110/BKT110	6.075T15P	**5.00**	T15PQ	DT15PK
BKT356	5.12T20P	**6.50**	T20PQ	DT20PK / DT20PQ
DAH	5.12T20P	**6.50**	T20PQ	DT20PK / DT20PQ
DAHM.25.012...	030.2547.T8P	**1.30**	T8PL	DT8PK
DAHM.25	030.2553.T8P	**1.30**	T8PL	DT8PK
DAHM.37	030.3070.T10P	**3.40**	T10PL	DT10PK
DAHM.62	5.12T20P	**6.50**	T20PQ	DT20PK / DT20PQ
DAM31...02B	030.2541.T8P	**1.10**	T8PL	DT8PK
DAM31...03A/B	030.2547.T8P	**1.10**	T8PL	DT8PK
DAM31...04A/B	030.2553.T8P	**1.10**	T8PL	DT8PK
DAM31...05A/B	030.2557.T8P	**1.10**	T8PL	DT8PK
DAM32...A...	030.3576.T10P	**3.50**	T10PL	DT10PK
DAM32...02A/B	030.3562.T10P	**3.50**	T10PL	DT10PK
DAM32.025.D...03A/B	030.3569.T10P	**3.50**	T10PL	DT10PK
DAM32.032.D...03A/B	030.3576.T10P	**3.50**	T10PL	DT10PK
DAM32.417...03B	030.3569.T10P	**3.50**	T10PL	DT10PK
DAM62	030.3070.T10P	**3.00**	T10PL	DT10PK
DRHD	6.075T15P	**5.00**	T15PQ	DT15PK
HSK	5.12T20P	**6.50**	T20PQ	DT20PK / DT20PQ
L381.A060...	5F.08T20P	**5.50**	T20PQ	DT20PK
L381.D080...	5F.08T20P	**5.50**	T20PQ	DT20PK
L381.D086...	5.12T20P	**6.50**	T20PQ	DT20PK / DT20PQ
L381.G070...	5.10T20P	**6.50**	T20PQ	DT20PK / DT20PQ

螺钉扭矩
Torque of Screws

型号 Type	螺钉 Screw	M_d Nm	夹紧扳手 Clamping wrench	刀板 Blade
L381.G080...	5F.08T20P	**5.50**	T20PQ	DT20PK
L381.G086/090/098	5.12T20P	**6.50**	T20PQ	DT20PK / DT20PQ
L381.N090...	5F.08T20P	**5.50**	T20PQ	DT20PK
L381.S...	5.15T20P	**6.50**	T20PQ	DT20PK / DT20PQ
L381.T...	5F.08T20P	**5.50**	T20PQ	DT20PK
L381.X090...	5.12T20P	**6.50**	T20PQ	DT20PK / DT20PQ
M101	030.3543.T8P	**2.00**	T8PL	DT8PK
M101...A22...30/...40	030.0520.0912	**6.50**	T15PQ	DT15PK
M101...A32...30/...40	030.0620.0913	**8.00**	T20PQ	DT20PK / DT20PQ
M101...A40...30/...40	030.1030.0911	**15.00**	SW6.0 DIN911	
M116	5.13T20EP	**6.50**	T20PQ	DT20PK / DT20PQ
M117K...05	030.265P.0821	**1.20**	T8PL	DT8PK
M117K...07	030.265P.0819	**1.20**	T8PL	DT8PK
M117K...09	030.400P.0227	**4.30**	T15PQ	DT15PK
M117.MD10...	030.400P.0227	**4.30**	T15PQ	DT15PK
M117U...05	030.265P.0818	**1.20**	T8PL	DT8PK
M117U...07	2.6.5T8EP	**1.20**	T8PL	DT8PK
M117P...05	030.265P.0818	**1.20**	T8PL	DT8PK
M117P...07	2.6.5T8EP	**1.20**	T8PL	DT8PK
M271	030.2609.T8P	**1.20**	T8PL	DT8PK
M274	030.3513.T15P	**3.00**	T15PQ	DT15PK
M275	3.5.10T10P	**3.00**	T10PL	DT10PK
M275.D	030.357P.0315	**3.00**	T10PL	DT10PK
M275.T	3.5.10T10P	**3.00**	T10PL	DT10PK
M279	030.0516.T20P	**6.50**	T20PQ	DT20PK / DT20PQ
M304	1.8.4T6EP	**0.90**	T6PL	DT6K
M306	2.6.5T8EP	**1.20**	T8PL	DT8PK
M308	3.5.12T10EP	**3.00**	T10PL	DT10PK
M310...03	030.0324.T7P	**1.20**	T7PL	DT7PK
M310...04	030.3535.T8P	**2.00**	T8PL	DT8PK
M310...05	030.3543.T8P	**2.00**	T8PL	DT8PK
M311	4.14T15P	**5.00**	T15PQ	DT15PK
M311.0016.00.B/E	4.16T15KP	**5.00**	T15PQ	DT15PK
M313	5.14T20P	**6.50**	T20PQ	DT20PK / DT20PQ
M313.0016.00.A/B/E	5.13T20KP	**6.50**	T20PQ	DT20PK / DT20PQ
M328	5.14T20P	**6.50**	T20PQ	DT20PK / DT20PQ
M328.0020.00.A/B/E	5.13T20KP	**6.50**	T20PQ	DT20PK / DT20PQ
M328.0020.D...	5.17T20P	**6.50**	T20PQ	DT20PK / DT20PQ

螺钉扭矩
Torque of Screws

型号 Type	螺钉 Screw	M_d Nm	夹紧扳手 Clamping wrench	刀板 Blade
M332	5.17T20P	**6.50**	T20PQ	DT20PK / DT20PQ
M335	6.17T25P	**12.00**	T25PQ	DT20PQ
M406...02/03	030.2669.T8P	**1.20**	T8PL	DT8PK
M406...04/05/06	030.2608.T8P	**1.20**	T8PL	DT8PK
M406.025.11.D16.1.02.B	030.2608.T8P	**1.20**	T8PL	DT8PK
M409	030.3511.T10P	**3.50**	T10PL	DT10PK
M610	030.3513.T15P	**3.50**	T15Q	DT15K
M620	5.14T20P	**6.50**	T20PQ	DT20PK / DT20PQ
R381.T...	5F.08T20P	**6.50**	T20PQ	DT20PK / DT20PQ
R381.X073...	5F.08T20P	**6.50**	T20PQ	DT20PK / DT20PQ
R381.X090...	5.12T20P	**6.50**	T20PQ	DT20PK / DT20PQ
SM328	5.17T20P	**6.50**	T20PQ	DT20PK / DT20PQ

进给率和时间的计算
Feed rates and time calculation

使用HORN的HTC程序可以简单而方便的计算出所需要的速度和进给。推荐您使用该程序计算切削参数，可以得到最好的切削性能和结果。可以在下页查看其基本功能。

It is simple and easy to calculate your speed and feeds using HORN'S HCT programme. We recommend that you calculate the cutting data with this programme as, it will provide you with the best cutting performance and results. Basic features of the calculations can be found on the following pages.

常规推荐:
Basic recommendations:

铣刀悬伸
Overhang of the milling cutter

尽可能选择最短的夹持装置或铣刀柄，以控制刀具的跳动公差。
大宽度和大悬伸的加工需要特殊的加工方法，例如将槽宽分多次加工出来，以降低切削力，达到最好的加工效果。

Select the shortest possible clamping device and milling shank, to control the runout tolerance of the tools. Large cutting widths in combination with long overhangs require specific manufacturing methods such as dividing the cutting width to achieve the best possible cutting result due to reduced cutting forces.

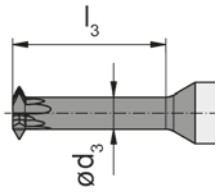

铣刀直径
Diameter of the milling cutter

当使用大直径刀具时，刀的直径越接近于孔的直径，加工周期将由于较小的旋转中心和较高的进给率而缩短，通常情况下，刀具的直径由工件的参数和应用设置所决定。

When using a large diameter cutter, whose relationship is close to the bore diameter, manufacturing cycle time can be reduced, due to the smaller centre of rotation and higher feed rates could be realized. Many times the rotation of the milling cutter centre will be defined by the parameters of the workpiece and the whole application setup.

螺纹铣削
Thread milling

使用HORN的螺纹铣刀时螺纹轮廓在满切情况下形成。这时螺纹锥度最小，尤其工件材质为高合金钢时。底孔为盲孔时推荐自底部至顶部的加工方法。否则可能会因为盲孔底部的切屑损坏刀具。

螺纹加工方法推荐：
铣刀直接不能超过螺纹小径的70%，否则会重复切削使整个螺纹尺寸超差。

With HORN thread milling inserts, the thread profile is generated in one full cut to the profile depth of the thread. This produces threads with minimal taper, especially in high alloyed steels. In blind holes, it is recommended to mill from the bottom to the top. Otherwise, there is the risk of damaging the tool because of milling into chips at the bottom of the blind hole.

A general recommendation for thread milling:
The milling cutter diameter should not exceed 70% of the minor diameter of the thread. Otherwise, recutting of the profile occurs, which could bring the whole thread out of tolerance.

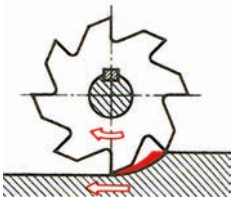

铣削方向
Milling direction

大多数HORN的铣刀是右手型，加工中推荐硬质合金刀具普遍采用的顺铣方式。

Most HORN milling tools are right-handed and it is recommended to use them with the climb milling process as this is generally recommended for carbide tools.

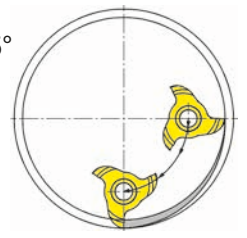

铣入工件
Milling entry into the workpiece

铣削时一个简单的径向切入会产生一个很大的接触角，这将导致振刀，并在之后的切削中一直存在，直到槽底。 推荐切入槽时以切入角45°到180°至槽底。计算得出的切削参数为满切时，但也适用于其他切削情况。

A simple radial entry of the milling cutter creates a very long contact angle which leads to vibrations which will not disappear for the rest of the milling operation and are visual on the bottom of the groove. It is recommended to enter the groove with a ramp angle of 45° up to 180° to the maximum depth of cut. The calculated cutting data refers to the milling condition when the insert is in the full cut, but can be also used for the entry loop.

符号
Symbols

ISO

a_r	a_e	径向切削深度 radial depth of cut	
d		切削刃Ø [mm] Cutting edge Ø [mm]	
f		每转进给量 Feed per revolutions	$f = f_z \cdot Z$ [mm/U] [mm/rev]
f_z	s_z	进给/齿 Feed/tooth	$f_z = \frac{v_f}{Z \cdot n}$ [mm]
h_m		切屑中间厚度 medium thickness of chip	
n		转速 Revolutions	$n = \frac{v_c \cdot 1000}{d \cdot \pi}$ [1/min]
r		刀具半径 Radius of cutter	
R		工件半径 Radius of workpiece	
v_c		切削速度 Cutting speed	$v_c = \frac{d \cdot \pi \cdot n}{1000}$ [m/min]
v_f	s'	进给率 Feed rate	$v_f = f_z \cdot Z \cdot n$ [mm/min]
v_{f2}	s'_2	刀尖进给 Feed rate of tool tip	
v_{f3}	s'_1	刀具中心的进给 Feed rate of tool centre	
Z		齿数 Number of teeth	

切削参数 406/409/DA/DAH/610
Cutting Data

材料 Material			材料组 Material group	硬度 (HB) Hardness Brinell	抗拉强度 R_m [N/mm²] Tensile Strength	材料示例 Example Material	K10	TA4_	
P	碳钢 Carbon steel	~ 0,2 % C	P1.1	125	430	CK15		180-140	
		~ 0,4% C 退火 annealed	P1.2	190	610	19Mn6		180-140	
		~ 0,4% C 调质 quenched	P1.3	210	640	36Mn5		180-140	
		~ 0,6% C 退火 annealed	P1.4	190	610	C55		180-140	
		~ 0,6% C 调质 quenched	P1.5	300	1000	CK60		180-140	
		易切钢 Free cutting steel	P1.6	220	750	9SMn28			
	合金钢 (<5%) Alloyed steel	退火 annealed	P2.1	180	590	100Cr6			
		调质 quenched	P2.2	280	960	14NiCr10			
		调质 quenched	P2.3	350	1250	34CrMo4			
		调质 quenched	P2.4	430	1450	55Cr3			
	高合金钢 (>5%) high alloyed steel	退火 annealed	P3.1	200	680	X10CrAl18			
		硬化 hardened	P3.2	350	1200	X210Cr2			
	铸钢 Cast steel	非合金 unalloyed	P4.1	180	590	GE200			
		合金 alloyed	P4.2	220	750	GX40CrSi28			
	粉末冶金钢 Sintered steel	软质 soft	P5.1	220	570	Sint-D39			
M	不锈钢Stainless steel	马氏体,铁素体 martensitic ferritic	M1.1	200	680	X16Cr13			
		奥氏体 austenitic	M1.2	300	1000	X6CrNiMo-Ti17-12-2			
		奥氏体 , 铁素体 austenitic ferritic	M1.3	230	780	X2CrNiMo-N17-13-3			
H	淬硬钢 Hardened steels	50-55 HRC	H1.1	-	-				
		55-60 HRC	H1.2	-	-				
		60-63 HRC	H1.3	-	-				
		> 63HRC	H1.4	-	-				

切削参数 406/409/DA/DAH/610
Cutting Data

切削速度 vc (m/min) / 起始值 Cutting speed vc (m/min) / Start values									
AS4_	SA4_	SD6_	SC6_	IG3_ IG6_	NE2_	HD05	PD75		
240-160	240-160	180-140		240-180					
240-160	240-160	180-140		240-180					
240-160	240-160	180-140		240-180					
240-160	240-160	180-140		240-180					
240-160	240-160	180-140		240-180					
240-160	240-160			240-180					
220-180	220-180			220-180					
220-180	220-180			220-180					
220-180	220-180			220-180					
220-180	220-180			220-180					
	130-80		130-80	130-80					
	130-80		130-80	130-80					
	130-80		130-80	130-80					

切削参数 406/409/DA/DAH/610
Cutting Data

材料 Material			材料组 Material group	硬度 (HB) Hardness Brinell	抗拉强度 R_m [N/mm²] Tensile Strength	材料示例 Example Material	K10	TA4_
K	灰铸铁 Grey cast iron	低拉伸强度 low tensile strength	K1.1	180	250	GG-25		160-140
		高拉伸强度 high tensile strength	K1.2	250	350	GG-40		160-140
	球磨铸铁 Spheroidal graphite cast iron	铁素体 ferritic	K2.1	160	400	GGG-40		160-140
		珠光体 perlitic	K2.1	260	700	GGG-60		160-140
	可锻铸铁 Malleable cast iron	铁素体 ferritic	K3.1	200	400	GTW-45		
		珠光体 perlitic	K3.2	260	700	GTS-55-04		
	奥氏体球墨铸铁 / ADI Ausferritic spheroidal cast iron / ADI	调质 quenched	K4.1	260	800			
		调质 quenched	K4.2	350	1050			
		调质 quenched	K4.3	450	1400			
N	铝合金 Al-alloys	非热处理 not heat treatable	N1.1	30		AlMg1		1200-500
		热处理 heat treatable	N1.2	100	340	AlMgSi1		1200-500
	铸铝合金 Al-cast-alloy	< 6% Si	N2.1	80	300	AlMgSi6	600-350	1200-500
		6-10% Si	N2.2	100	320	AlSi7Mg	600-350	1200-500
		10-15 % Si	N2.3	130	450	AlSi12		1200-500
	铜合金 Copper-alloys	纯铜 Pure copper	N3.1	100	340	Cu	230-180	1200-500
		黄铜,青铜 Brass	N3.2	90	310	CuZn40Pb	230-180	1200-500
		无铅黄铜 Lead-free brass	N3.3	110	430	CuZn40	230-180	1200-500
		高强度 high strength	N3.4	300	1000	CuZn25Al5-Mn4Fe3	230-180	1200-500
	石墨 Graphite		N4.1					
S	耐热合金(铁基) Heat resistant alloy	退火 annealed	S1.1	200	670			30-25
		硬化 hardened	S1.2	275	930			30-25
	耐热合金 (镍基,钴基) Heat resistant alloy	退火 annealed	S2.1	250	840	Inconel 600		30-25
		硬化 hardened	S2.2	350	1200	Inconel 713		30-25

切削参数 406/409/DA/DAH/610
Cutting Data

切削速度 vc (m/min) / 起始值 Cutting speed vc (m/min) / Start values									
AS4_	SA4_	SD6_	SC6_	IG3_ IG6_	NE2_	HD05	PD75		
300-220	180-140	300-220	300-220	200-160					
260-220	160-140	260-220	260-220	180-160					
260-220	160-140	260-220	260-220	180-160					
260-220	160-140	260-220	260-220	180-160					
1000-350	1200-500					3000-500	3000-500		
1000-350	1200-500					3000-500	3000-500		
1000-350	1200-500				3000-500	3000-500	3000-500		
	1200-500				2000-500	3000-500	3000-500		
	1200-500				1500-350	3000-500	3000-500		
	1200-500				300-220	3000-500	3000-500		
	1200-500				230-180	3000-500	3000-500		
	1200-500				240-180	3000-500	3000-500		
	1000-500				250-160	3000-500	3000-500		
	70-30		80-30	80-30					
	70-30		80-30	80-30					
	70-30		80-30	80-30					
	70-30		80-30	80-30					

切削参数 406/409/DA/DAH/610
Cutting Data

材料 Material			材料组 Material group	硬度 (HB) Hardness Brinell	抗拉强度 R_m [N/mm²] Tensile Strength	材料示例 Example Material	K10	TA4_	
S	钛 Titan	钛合金 α Titanium alloy α	S3.1	120	240			30-25	
		钛合金 α-β Titanium alloy α- β	S3.2	360	1200			30-25	
		钛合金 β Titanium alloy β	S3.3	410	1400			30-25	
O	热塑性塑料 Thermoplastics		O1.1				1500-500		
	Duro塑料 Duro plaste		O1.2				1500-500		
	玻璃纤维增强塑料 Plastics glass fibre reinforced	GFK	O1.3						
	碳纤维增强塑料 Plastics carbon fibre reinforced	CKF	O1.4						

切削参数 406/409/DA/DAH/610
Cutting Data

	切削速度 vc (m/min) / 起始值 Cutting speed vc (m/min) / Start values									
	AS4_	SA4_	SD6_	SC6_	IG3_ IG6_	NE2_	HD05	PD75		
		70-30		80-30	80-30					
		70-30		80-30	80-30					
		70-30		80-30	80-30					
						500-1500				
						500-1500				

涂层概览
Coating Overview

材料组 Material group	涂层方程式 Coating structure	推荐 Recommendation						应用 Application
AN2_ AN4_	AlCrSiN	**P05**	M05	K05	N05	S05	H05	针对高速切削，适合干切削，槽铣削 For high cutting speeds, suitable for dry machining, groove and slot milling
		P10	M10	K10	N10	S10	H10	
		P20	M20	K20	N20	S20	H20	
		P30	M30	K30	N30	S30	H30	
		P40	M40	K40	N40			
		P50	M50					
AS4_ AS6_	TiAlN	P05	M05	K05	N05	S05	H05	粗加工的理想选择，全方位加工也适合干切削，槽铣削 Ideal for roughing operations, All-rounder also suitable for dry machining, groove and slot milling
		P10	M10	K10	N10	S10	H10	
		P20	M20	K20	N20	S20	H20	
		P30	**M30**	K30	N30	S30	H30	
		P40	**M40**	**K40**	N40			
		P50	**M50**					
DD2_	TiB2	P05	M05	K05	N05	S05	H05	粗加工和精加工 Roughing and finishing
		P10	M10	K10	**N10**	S10	H10	
		P20	M20	K20	**N20**	S20	H20	
		P30	M30	K30	**N30**	S30	H30	
		P40	M40	K40	N40			
		P50	M50					
EG3_	AlTiN + TiN	P05	M05	K05	N05	S05	H05	高速切削精加工的理想选择 Ideal for finishing operations at high cutting speeds
		P10	M10	K10	N10	S10	H10	
		P20	M20	K20	N20	S20	H20	
		P30	**M30**	**K30**	N30	S30	H30	
		P40	**M40**	**K40**	N40			
		P50	**M50**					
EG5_	AlTiN + TiN	P05	M05	K05	N05	S05	H05	高速切削粗加工槽铣削的理想选择 Ideal for roughing operations at high cutting speeds, groove and slot milling
		P10	M10	K10	N10	S10	H10	
		P20	M20	K20	N20	S20	H20	
		P30	**M30**	**K30**	N30	S30	H30	
		P40	**M40**	**K40**	N40			
		P50	**M50**					
IG3_	TiAlSiN	**P05**	M05	K05	N05	S05	H05	高速切削精加工槽铣削的理想选择 Ideal for finishing operations at high cutting speeds, groove and slot milling
		P10	**M10**	**K10**	N10	S10	H10	
		P20	**M20**	**K20**	N20	S20	H20	
		P30	**M30**	K30	N30	**S30**	H30	
		P40	M40	K40	N40			
		P50	M50					
IG6_	TiAlSiN	**P05**	M05	K05	N05	S05	H05	高速切削粗加工槽铣削的理想选择 Ideal for roughing operations at high cutting speeds, groove and slot milling
		P10	**M10**	**K10**	N10	S10	H10	
		P20	**M20**	**K20**	N20	S20	H20	
		P30	**M30**	K30	N30	**S30**	H30	
		P40	M40	K40	N40			
		P50	M50					
NE2_	ta-C	P05	M05	K05	N05	S05	H05	粗加工和精加工 Roughing and finishing
		P10	M10	K10	N10	S10	H10	
		P20	M20	K20	N20	S20	H20	
		P30	M30	K30	N30	S30	H30	
		P40	M40	K40	N40			
		P50	M50					

涂层概览
Coating Overview

材料组 Material group	涂层方程式 Coating structure	推荐 Recommendation						应用 Application
RC2_ RC4_	AlCrSiN	**P05**	M05	K05	N05	S05	H05	高速切削 适合干切削 槽铣削和切断铣削 at high cutting speeds suitable for dry machining Groove and parting milling
		P10	M10	K10	N10	S10	H10	
		P20	**M20**	**K20**	N20	S20	H20	
		P30	**M30**	**K30**	N30	S30	H30	
		P40	M40	**K40**	N40			
		P50	M50					
SG3_	TiAlCrSiN	P05	**M05**	K05	N05	**S05**	H05	粗加工和精加工 Roughing and finishing
		P10	**M10**	K10	N10	**S10**	H10	
		P20	**M20**	K20	N20	**S20**	**H20**	
		P30	M30	K30	N30	S30	H30	
		P40	M40	K40	N40			
		P50	M50					
TI2_	TiCn	P05	M05	K05	N05	S05	H05	中速切削粗加工和精加工，有助于避免积屑瘤 Roughing and finishing at moderate cut-ting speeds, reduction of built-up edges
		P10	M10	K10	N10	S10	H10	
		P20	M20	K20	N20	S20	H20	
		P30	M30	K30	N30	S30	H30	
		P40	M40	K40	N40			
		P50	M50					
TN3_	TiN	P05	**M05**	K05	N05	S05	H05	中速切削粗加工和精加工槽铣削 Roughing and finishing at moderate cut-ting speeds, groove and slot milling
		P10	**M10**	K10	N10	S10	H10	
		P20	**M20**	K20	N20	S20	H20	
		P30	M30	K30	N30	S30	H30	
		P40	M40	**K40**	N40			
		P50	M50					
SA4_ SA6_		P05	M05	K05	N05	S05	H05	中速切削粗加工和精加工，高进给量的理想选择 Roughing and finishing at medium cutting speeds, ideal for high feed rates
		P10	M10	K10	N10	S10	H10	
		P20	**M20**	**K20**	N20	S20	H20	
		P30	**M30**	**K30**	N30	S30	H30	
		P40	**M40**	**K40**	N40			
		P50	M50					
SC6_	TiCN + Al2O3	P05	**M05**	K05	N05	S05	H05	高速切削粗加工的理想选择 Ideal for roughing operations at high cutting speeds
		P10	**M10**	K10	N10	S10	H10	
		P20	**M20**	K20	N20	**S20**	H20	
		P30	**M30**	K30	N30	**S30**	H30	
		P40	M40	K40	N40			
		P50	M50					

ISO 513	P	M	K	N	S	H
+ 韧性 / Tenacity - - 耐磨性 / Wear resistance +	05	05	05	05	05	05
	10	10	10	10	10	10
	20	20	20	20	20	20
	30	30	30	30	30	30
	40	40	40	40		
	50	50				

附加设备
Additional Equipment

D 041 VL
0,4-1 Nm

带刻度的扭矩扳手
-扭矩可调
-屏幕显示调整扭矩

扭矩无极调节，符合人体工程学的多组件手柄，轻而紧凑的设 计，当达到设定扭矩时单击信号按钮。
(标准: EN ISO 6798, BS EN 26789, ASME B 107.14.M.)
(精度: ± 6 %)

D 15 VL
1-5 Nm

Torque screw driver with scale
- variable torque setting
- adjusted torque is shown on display

The Torque can be adjusted with a special torque setter (included).
Handle: Ergonomical form gives perfect handling abilities.Audible signal when set torque is reached.
Standard: EN ISO 6798, BS EN 26789, ASME B 107.14.M.
Precision: ± 6 %

D 28 VL
2-7 Nm

ED 28 VL
配 / for
D041VL / D15VL / D28VL

设定扭矩的设备

柄部：醋酸纤维材质，表面为细微结构
刃部：八角形，硬化处理，镀锌

Device for setting the required torque

Handle: Celluloseacetat with micro structured surface
Blade: Octogonal (8 flats) blade, hardened galvanized

D515QL

5-14 Nm

带刻度的扭矩扳手
-扭矩可调
-屏幕显示调整扭矩

扭矩无极调节，符合人体工程学的多组件手柄，轻而紧凑的设 计，当达到设定扭矩时单击信号按钮。
(标准: EN ISO 6798, BS EN 26789, ASME B 107.14.M.)
(精度: ± 6 %)

Torque screw driver with scale
- variable torque setting
- adjusted torque is shown on display

The Torque can be adjusted with a special torque setter (included).
Handle: Ergonomical form gives perfect handling abilities. Audible signal when set torque is reached.
Standard: EN ISO 6798, BS EN 26789, ASME B 107.14.M.
Precision: ± 6 %

ED515QL
配 / for
D515QL

扭矩调整扳手

柄部: 纤维素乙酸酯微观结构表面
刃部: 8角形状,经过硬化处理，镀铬.

Device for setting the required torque.

Handle: Celluloseacetat with micro structured surface
Blade: Octogonal (8 flats) blade, hardened galvanized

DT6PK
DT7PK
DT8PK
DT9PK
DT10PK
DT15PK
DT20PK
DT25PK
配 / for
D041VL / D15VL / D28VL

Plus

扳手刀头配 TORX PLUS® 螺钉

刀头: 高品 质铬 钒钢，经过硬 化处理，镀铬。
Wiha镀铬刀片保证了最好的精密度。
使用深绿色代码
应用: 使用给定的扭紧扭矩，结合一个Wiha扭矩扳手。

Blade for TORX-Plus® screws

Blade: High quality Chrome-Vanadium steel, through hardened, chrome plated.
Wiha Chrome Blade guarantees maximum precison. Colored code dark green
Utilization: Controlled screw setting with definite torque in combination with Wiha torque screw driver handle.

DT6K
DT8K
DT15K
配 / for
D041VL / D15VL / D28VL

刀头-Torx螺钉

刀头： 高品质铬钒钢，硬化处理，镀铬
Wiha镀铬刀头保证了最好的精密度。
颜色代码为绿色
用途： 拧紧螺钉到指定扭矩，和Wiha扭矩扳手刀柄组合。

Blade for Torx screws

Blade: High quality Chrome-Vanadium steel, through hardened, chrome plated.
Wiha Chrome Blade guarantees maximum precison. Colored code dark green
Utilization: Controlled screw setting with definite torque in combination with Wiha torque screw driver handle.

DT15PQ
DT20PQ
DT25PQ
DT27PQ
DT30PQ
配 / for
D515QL

Plus

扳手刀头配 TORX PLUS® 螺钉

刀头: 高品 质铬 钒钢，经过硬 化处理，镀铬。
Wiha镀铬刀片保证了最好的精密度。
使用深绿色代码
应用: 使用给定的扭紧扭矩，结合一个Wiha扭矩扳手。

Blade for TORX-Plus® screws

Blade: High quality Chrome-Vanadium steel, through hardened, chrome plated. Wiha Chrome Blade guarantees maximum precison. Colored code dark green
Utilization: Controlled screw setting with definite torque in combination with Wiha torque screw driver handle.

DSW15K
DSW20K
DSW25K
DSW30K
DSW40K
配 / for
D041VL / D15VL / D28VL

DSW50K
DSW60K
配 / for
D15QL

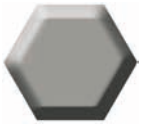

扳手刀头-内六角螺钉

刀头： 高品质的铬钒钢，硬化处理，镀铬。
Wiha镀铬刀片保证了最好的精密度。
使用红色代码
应用： 使用给定的扭紧扭矩，结合一个Wiha扭矩扳手。

Blade for allen screws

Blade: High quality Chrome-Vanadium steel, through hardened, chrome plated.
Wiha Chrome Blade guarantees maximum precison. Colored code red
Utilization: Controlled screw setting with definite torque in combination with Wiha torque screw driver handle

D14ZBK
配 / for
D041VL / D15VL / D28VL

通用钻套
也用于所有的C6.3和E6.3(1/4")钻头

刀头：高品质铬钒钢，经过硬化处理，镀铬。
刀颈：不锈钢
应用：用于固定扭矩，扭矩标与柄部。

Universal Bitholder for C6,3 and E6,3 (1/4") Bits

Blade: High quality Chrome-Vanadium steel, through hardened, chrome plated.
Collar: Stainless steel
Utilization: For controlled screw setting with definite torque in combination with torque screw driver handle.

D14ZBQ
配 / for
D515QL

通用钻套
也用于所有的C6.3和E6.3(1/4")钻头

刀头：高品质铬钒钢，经过硬化处理，镀铬。
刀颈：不锈钢
应用：用于固定扭矩，扭矩标与柄部。

Universal Bitholder for C6,3 and E6,3 (1/4") Bits

Blade: High quality Chrome-Vanadium steel, through hardened, chrome plated.
Collar: Stainless steel
Utilization: For controlled screw setting with definite torque in combination with torque screw driver handle.

14ZQK

通用T型刀柄的钻套
也用于所有的C6.3和E6.3(1/4")钻头

刀头：高品质铬钒钢，经硬化处理，镀铬
刀颈：不锈钢
应用：开关控制

Universal Bitholder with T-handle for C6,3 and E6,3 (1/4") Bits

Blade: High quality Chrome-Vanadium steel, through hardened, chrome plated.
Collar: Stainless steel
Utilization: For controlled opening

T6PW
T7PW
T8PW
T9PW
T10PW
T15PW
T20PW
T25PW
T30PW

Plus

TORX PLUS® 螺钉扳手

应用: 适用于各种使用TORX PLUS®螺钉
注意: TORX PLUS®-扳手不适用于 Torx-螺钉

Wrench for TORX PLUS® Screws

Utilization: For all kind of using TORX PLUS® Screws
Attention: TORX PLUS®-Wrench does NOT fit for Torx-Screws

型号 Type	页 Page
108	45-49, 288
111	74-78, 300, 301
116	113-115
304	32-35, 280-282
306	50-59
306	289-291
308	79-85, 302
311	97-103, 310-312, 413, 414
313	126-128,130-136, 321-323, 419
314	229-231, 257-260, 353, 456
325	160
328	161-167, 331, 332, 423
332	184-187,
335	203
380	221-224, 351, 352
380...IK	223, 225
381	228
381	442-454
382	250-253
383	254-256
406	430, 531, 532
409	431, 549-551
606	60-65
606	292-294
608	86-87,
608	303-305
610	562
611	104-107
611	313, 614
613	137-146,
613	324, 325, 373-376
620	207, 208
628	168-174, 333, 334, 377
632	188-191, 340, 378, 379
636	192-194
713	147, 148
911	108
913	149
928	175
932	195
939	196-198
ABS..380	227
DA31	482
DA32	483-485
DA62	486
DAH25	497
DAH37	503-504
DAH82	510
DAH84	512
DAHM25	494-496
DAHM37	500-502
DAHM82	507-509
DAHM84	511
DAM31	469-470, 468, 475, 476
DAM32	468, 471, 473, 475, 476
DAM62	472, 474, 477
DCF	22
DCG	13-18

型号 Type	页 Page
DCN	20
DCR	19
DCX	21
DGVZ	404
HSK380	226
L313	129, 133
M101	235-239
M116	112
M275	211-214, 345-346, 436, 437
M279	380
M304	30, 279
M304.ST	31
M306	38-40, 287
M306.ER	41
M306.M	44
M306.ST	42
M308	68-69, 299
M308.ER	71
M308.M	73
M308.ST	70
M310	264-270
M310	270
M311	90-91, 94, 309, 412
M311.ER	93
M311.M	96
M311.ST	92
M313	118, 123, 319, 320, 418
M313.ER	121, 122
M313.M	125
M313.ST	119, 120
M328	152-153, 157, 329, 422
M328.ER	155, 156
M328.M	159
M328.ST	154
M332	178-179, 339
M332.ER	181
M332.M	183
M332.ST	180
M335	202
M406	428, 526-530
M409	429, 536-548
M610	560-561
M620	206
MD	478-481
MDR	390
N105	385
N110	385
N314	455
314	455
RS275	218, 347
RS279	381, 382
S101	240-244
S117	385
S275	215-217, 438
S310	271
SDA62	487
SM328	330
WFB	43, 72, 95, 124, 158, 182

找到您合适的刀具解决方案.
FIND YOUR RIGHT
TOOLING SOLUTION NOW.

horn-group.com

DEUTSCHLAND, STAMMSITZ
GERMANY, HEADQUARTERS
—
Hartmetall Werkzeugfabrik
Paul Horn GmbH
Horn-Straße 1
D-72072 Tübingen

Tel +49 7071 7004-0
Fax +49 7071 72893

info@de.horn-group.com
horn-group.com

KFRAES100CE, 09/2023